PX0842/B Datasheet

Product Name // Front Panel Mount Connector PX0842 Series USB 2.0 Sealed B Socket Front of Panel to Standard A Socket Rear of Panel

View Product Page

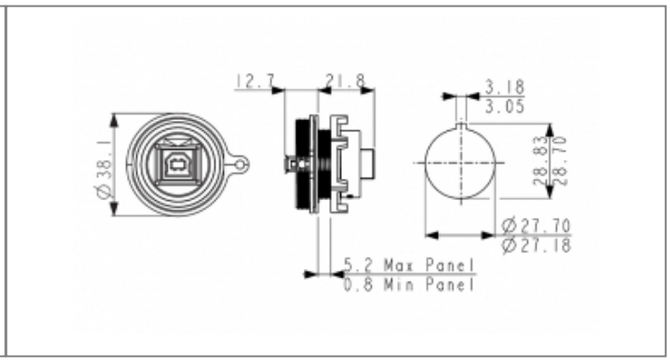

// Product Description:

- Front Panel Mount Connector
- Water and dustproof to IP68 when mated with compatible connector
- Sealed Standard USB 2.0 Type B socket on external/front panel face, Standard USB 2.0 Type A socket on internal/rear panel face:
- Mate with PX0840, PX0841 USB Cables
- PX0733 Sealing Cap available separately to maintain IP rating of unmated connectors

// General Information:

Product Display Title:	Front Panel Mount Connector
Product Family:	Circular Data Connectors
Product Series:	Standard Buccaneer - USB
Body Colour:	Black
Body Material:	Polyester (PE) - Glass Filled
Body Material Type:	Plastic Body
Contact Type:	Socket Contact
Coupling Type:	Screw
Current Max:	1A
Data Cable Type:	USB 2.0 Sealed B Socket to Standard A Socket
Diameter Over Coupling Ring Mm:	38.1mm
Flamability Rating:	UL94V-0
Function:	Front Panel Mount Connector
Ip Rating:	IP68, IP69K
Max Operating Temperature:	+70°C
Min Operating Temperature:	0°C
Number Of Contacts:	4 Contacts
Rohs Compliant:	Yes
Voltage Max:	5V

// Product PDF Links

Standard Series USB connectors...

// Product 3D CAD Model Links

PX0842/B3D CAD Model