COMUS Group

COMUS International

# Tilt Switch - Non Mercury Contacts
# Part Number : RBS 04 02 00
# Product Data Sheet

## PICTURE

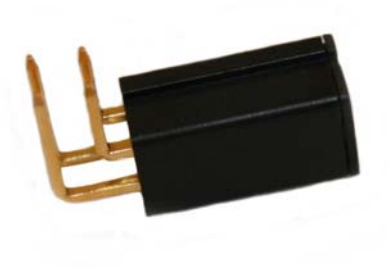

## DIMENSIONS

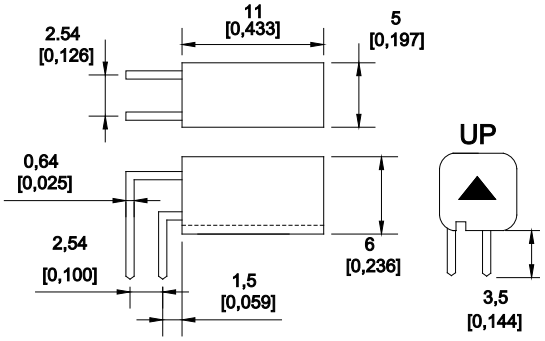


## CONTACT FORM

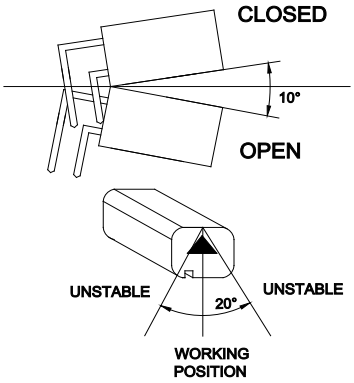


✔RoHS Compliant

Drawings not to scale
All dimensions in mm nominal

## SPECIFICATION

| | | |
|---|---|---|
| Contact Form / Style | | Dependant on position (see above) |
| Switching Voltage | Max Volts DC | 24 |
| Switching Current | Max mAmps | 25 |
| Contact Resistance | Max Ohms | initial 5 max, 10 after life test |
| Operation Life | Cycles | 100,000 |
| Operating Temperature | Celsius | -25° - 70° |
| Storage Temperature | Celsius | -40° - 85° |
| Case Material | | Glass Fibre Polyamide, UL94V-0 |
| Cable/Termination | | Pin |

## Applications Include

- Security Alarm System.
- Electronic toys.
- Anti tamper devices.
- Consumer electronics.

## Features / Options

- Terminal, Copper Alloy or Gold plated over Nickel
- Suitable for Alarms and non hazardous applications.
- All switches have gold plated ball and gold plated terminals for stability



| Rev. No. | Revision Note | Date | Signature |
|---|---|---|---|
| 2 | Datasheet redesign | 07-03-12 | ML |

As part of the company policy of continued product improvement, specifications may change without notice. Our sales office will be pleased to help you with the latest information on this product range and the details of our full design and manufacturing service. All products are supplied to our standard conditions of sale unless otherwise agreed in writing.

Phone : (1)973 777 6900 www.comus-intl.com Fax: (1)973 777 8405

Belgium: +32 (0) 12 390400 - Assemtech,UK: +44 (0) 1255 862236 - Germany:+49 (0)911 923 15 943

© 2012 Copyright Comus International, 454 Allwood Road, Clifton NJ 07012, USA