THIS DRAWING IS UNPUBLISHED. RELEASED FOR PUBLICATION -,- .
© COPYRIGHT - BY TYCO ELECTRONICS CORPORATION. ALL RIGHTS RESERVED.

LOC	DIST
AD	00

REVISIONS

P	LTR	DESCRIPTION	DATE	DWN	APVD
	U1	REVISED PER ECO-10-000443	13JAN10	KK	HMR

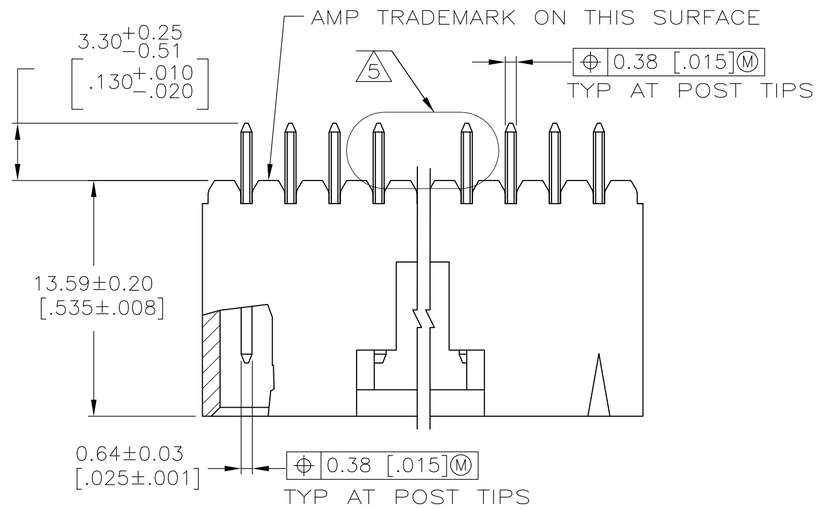

1. 0.000381 [.000015] GOLD IN THE CONTACT AREA, 0.00254–0.00508 [.000100–.000200] MATTE TIN–LEAD ON THE SOLDER TAIL, ALL OVER ALL OVER 0.00127 [.000050] NICKEL.
2. POINT OF MEASUREMENT FOR PLATING THICKNESS
3. THE NOTED DIMENSIONS APPLY FROM THE BASIC DIMENSION LINE (NOT THE POST CENTERLINE) TO THE SURFACE INDICATED
4. ONE POLARIZATION SLOT FOR 2 AND 3 POSITION ASSEMBLIES ONLY.
5. SELECT POST TAILS FORMED TO PROVIDE CONNECTOR HOLD DOWN UNTIL SOLDERED, CONFIGURATION ACCEPTS 0.69–2.03 [.027–.080] THICK PRINTED CIRCUIT BOARD (SEE DETAIL Z).
6. DIMENSIONS NOTED ARE FOR SOLDER STENCIL LAYOUT FOR USE WITH 1.57±0.20 [.062±.008] THICK PRINTED CIRCUIT BOARDS.
7. PARTS ARE PACKAGED IN GANG OF TUBES
8. OBSOLETE PART NO., REFER TO DWG 104909 FOR POS 13 THRU 25.
9. HOUSING: HIGH TEMPERATURE THERMOPLASTIC, COLOR–BLACK. POSTS: BRASS.
10. 0.000381 [.000015] GOLD IN THE CONTACT AREA, 0.00254–0.00508 [.000100–.000200] MATTE MATTE TIN ON THE SOLDER TAIL, ALL OVER ALL OVER 0.00127 [.000050] NICKEL.
11. SUPERSEDED

PART NO.	SUPERSEDED BY
1–104362–2	1–104909–2
1–104362–4	1–104909–4
1–104362–7	1–104909–7
2–104362–2	—
2–104362–3	—

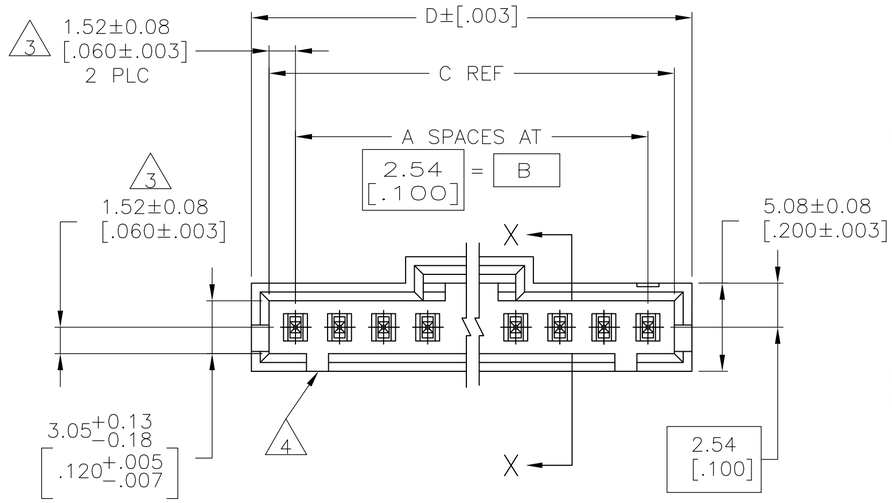

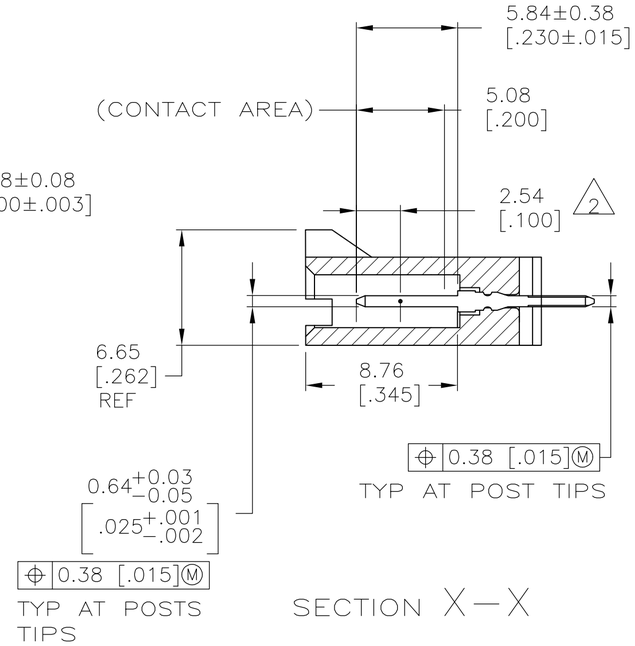

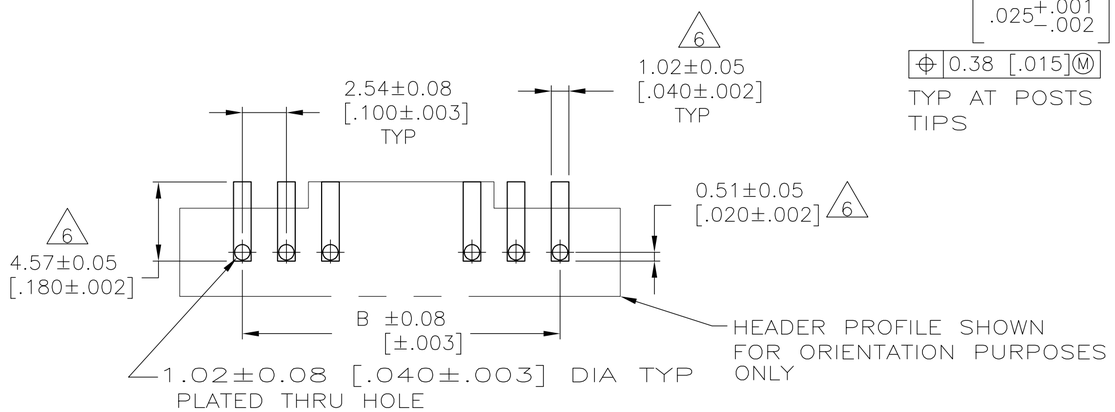

RECOMMENDED PC BOARD MOUNTING DIMENSIONS
RECOMMENDED STENCIL THICKNESS = 0.25 [.010]

PLATING	D	C	B	A	NO OF POSN	ASSEMBLY PART NUMBER
10	33.02 [1.300]	30.99 [1.220]	27.94 [1.100]	11	12	6–104362–1
10	30.48 [1.200]	28.45 [1.120]	25.4 [1.000]	10	11	6–104362–0
10	27.94 [1.100]	25.91 [1.020]	22.86 [.900]	9	10	5–104362–9
10	25.4 [1.000]	23.37 [.920]	20.32 [.800]	8	9	5–104362–8
10	22.86 [.900]	20.83 [.820]	17.78 [.700]	7	8	5–104362–7
10	20.32 [.800]	18.29 [.720]	15.24 [.600]	6	7	5–104362–6
10	17.78 [.700]	15.75 [.620]	12.7 [.500]	5	6	5–104362–5
10	15.24 [.600]	13.21 [.520]	10.16 [.400]	4	5	5–104362–4
10	12.7 [.500]	10.67 [.420]	7.62 [.300]	3	4	5–104362–3
10	10.16 [.400]	8.13 [.320]	5.08 [.200]	2	3	5–104362–2
10	7.62 [.300]	5.59 [.220]	2.54 [.100]	1	2	5–104362–1
	66.04 [2.600]	64.01 [2.520]	60.96 [2.400]	24	25	8 2–104362–4
	63.5 [2.500]	61.47 [2.420]	58.42 [2.300]	23	24	11 2–104362–3
	60.96 [2.400]	58.93 [2.320]	55.88 [2.200]	22	23	11 2–104362–2
	58.42 [2.300]	56.39 [2.220]	53.34 [2.100]	21	22	8 2–104362–1
	55.88 [2.200]	53.85 [2.120]	50.8 [2.000]	20	21	8 2–104362–0
	53.34 [2.100]	51.31 [2.020]	48.26 [1.900]	19	20	8 1–104362–9
	50.8 [2.000]	48.77 [1.920]	45.72 [1.800]	18	19	8 1–104362–8
	48.26 [1.900]	46.23 [1.820]	43.18 [1.700]	17	18	11 1–104362–7
	45.72 [1.800]	43.69 [1.720]	40.64 [1.600]	16	17	8 1–104362–6
	43.18 [1.700]	41.15 [1.620]	38.1 [1.500]	15	16	8 1–104362–5
	40.64 [1.600]	38.61 [1.520]	35.56 [1.400]	14	15	11 1–104362–4
	38.1 [1.500]	36.07 [1.420]	33.02 [1.300]	13	14	8 1–104362–3
	35.56 [1.400]	33.53 [1.320]	30.48 [1.200]	12	13	11 1–104362–2
1	33.02 [1.300]	30.99 [1.220]	27.94 [1.100]	11	12	1–104362–1
1	30.48 [1.200]	28.45 [1.120]	25.4 [1.000]	10	11	1–104362–0
1	27.94 [1.100]	25.91 [1.020]	22.86 [.900]	9	10	104362–9
1	25.4 [1.000]	23.37 [.920]	20.32 [.800]	8	9	104362–8
1	22.86 [.900]	20.83 [.820]	17.78 [.700]	7	8	104362–7
1	20.32 [.800]	18.29 [.720]	15.24 [.600]	6	7	104362–6
1	17.78 [.700]	15.75 [.620]	12.7 [.500]	5	6	104362–5
1	15.24 [.600]	13.21 [.520]	10.16 [.400]	4	5	104362–4
1	12.7 [.500]	10.67 [.420]	7.62 [.300]	3	4	104362–3
1	10.16 [.400]	8.13 [.320]	5.08 [.200]	2	3	104362–2
1	7.62 [.300]	5.59 [.220]	2.54 [.100]	1	2	104362–1

104362

THIS DRAWING IS A CONTROLLED DOCUMENT.

DIMENSIONS: mm [INCHES]

TOLERANCES UNLESS OTHERWISE SPECIFIED:
0 PLC ± –
1 PLC ± –
2 PLC ± –
3 PLC ± .005
4 PLC ± –
ANGLES ± –

MATERIAL 9

FINISH SEE TABLE

DWN G DOUTY 2-22-88
CHK T C CLARK 2-22-88
APVD –
PRODUCT SPEC –
APPLICATION SPEC –
WEIGHT –

Tyco Electronics — Tyco Electronics Corporation, Harrisburg, Pa 17105-3608

NAME: HEADER ASSY, AMPMODU MTE, VERTICAL SINGLE ROW, .100 C/L, .025 SQ POST POLARIZED, WITH LATCHING & HOLD DOWN

SIZE	CAGE CODE	DRAWING NO	RESTRICTED TO
A2	00779	C-104362	–

CUSTOMER DRAWING | SCALE 4:1 | SHEET 1 OF 1 | REV U1