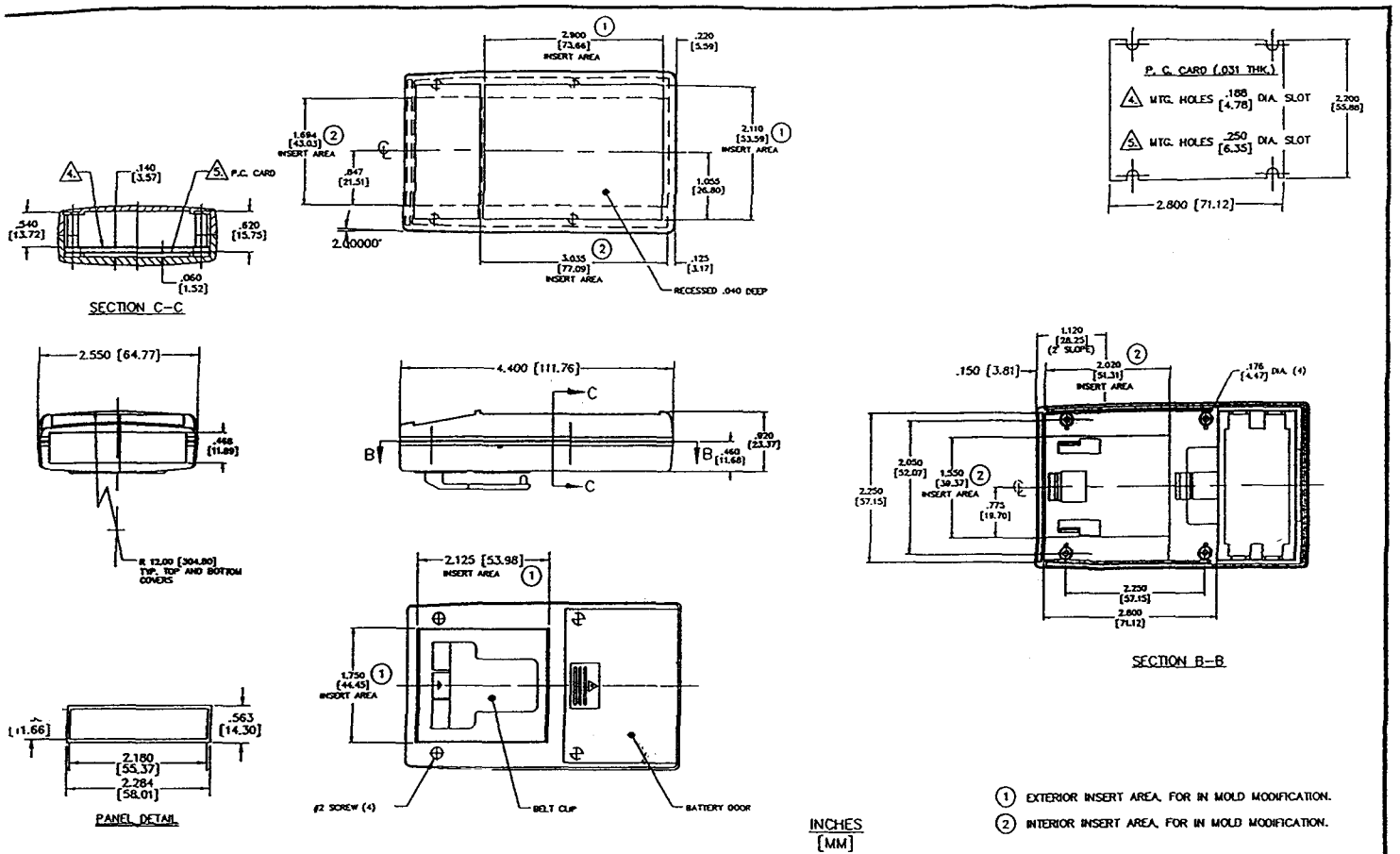

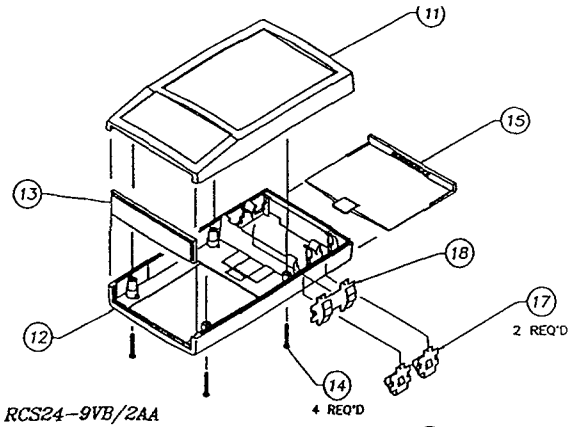

RCS24–9VB/2AA

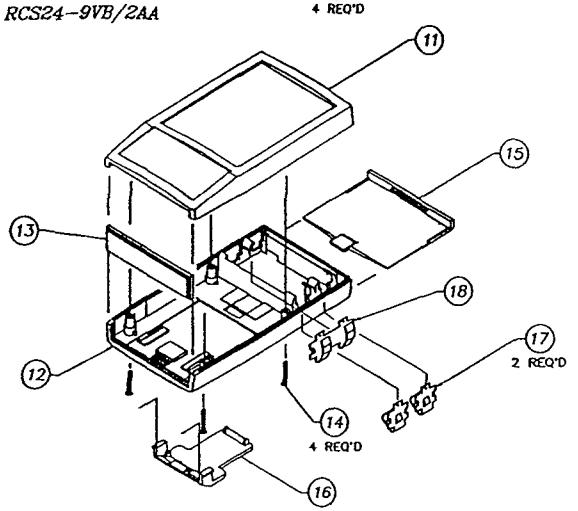

RCS24–9VB/2AA–BC

MODEL NUMBER GENERATION

K = KIT (THE RUBY LENS P/N 75240–01–705 WILL BE FURNISHED WITH ALL KITS).

P = PRODUCTION UNIT (THE LENS OR PANELS MUST BE PURCHASED SEPARATELY).

MODEL — COLOR / MAT'L CODE

RCS24–9VB/2AA–BC– ____ _

EMI–RFI COATING
S = NICKLE
C = COPPER

COLOR / MAT'L CODE		
COLOR	94HB	94V0
BLACK	000	028
P.C.BONE	039	060

ITEM	PART NUMBER	DESCRIPTION	PROD	KIT	PROD	KIT
			RCS24–BATT		RCS24–BATT–BC	
18	67256–01	BATTERY CLIP, DOUBLE	1	1	1	1
17	74702–01	BATTERY CLIP, SINGLE	2	2	2	2
16	71287–01–XXX	BELT CLIP	–	–	1	1
15	71198–01–XXX	DOOR, BATTERY	1	1	1	1
14	60228–01	SCREW	4	4	4	4
13	75240–02–XXX	PANEL	–	1	–	1
13	75240–01–705	PANEL (RUBY)	–	1	–	1
12	7XXXX–01–XXX	BOTTOM COVER	–	–	1	1
12	73891–01–XXX	BOTTOM COVER	1	1	–	–
11	74274–01–XXX	TOP COVER	1	1	1	1

"PRELIMINARY"

PACITEC®

RCS24–BATT, RCS24–BATT–B

1–800–220–9800