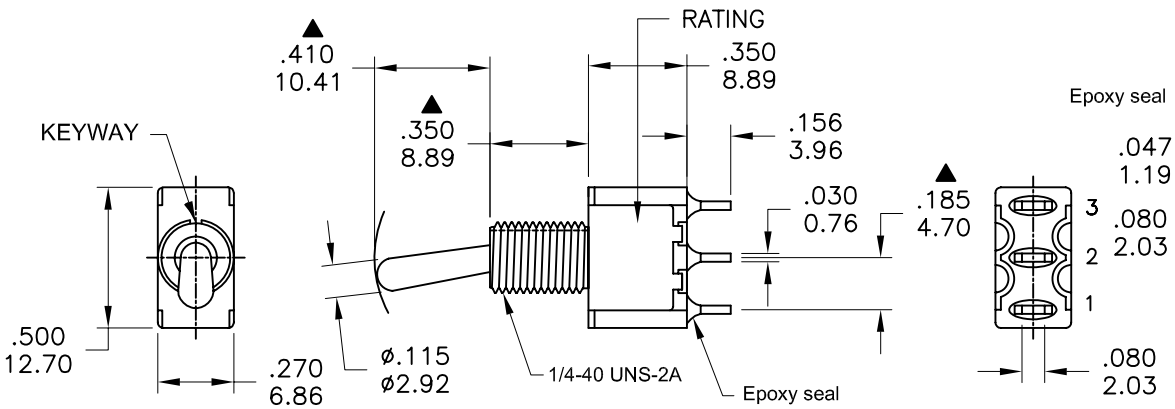

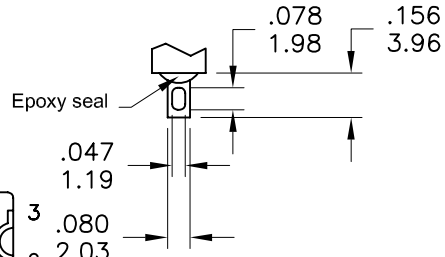

SOLDER LUG

Model No.	POS.1	POS.2	POS.3
1MS3	ON	OFF	ON
Term. Comm.	2-3	OPEN	2-1
SCHEMATIC	1 2 Comm. 3		1 2 Comm. 3

SWITCH FUNCTION

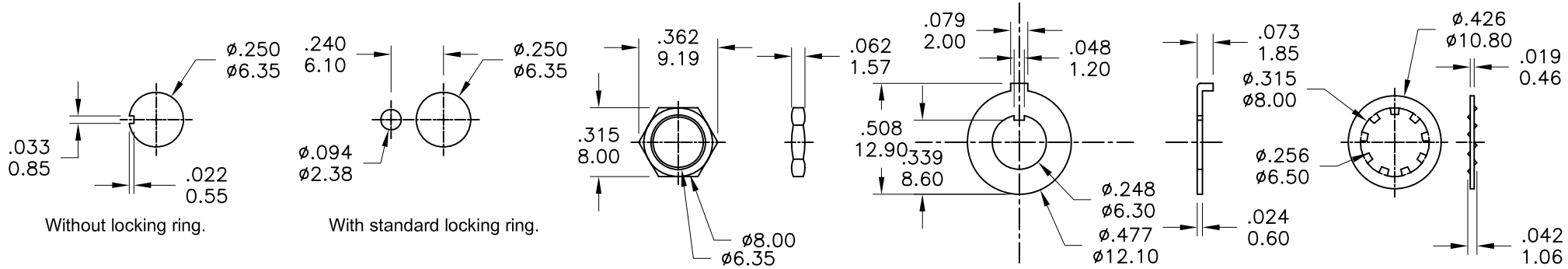

PANEL MOUNTING

SPECIFICATIONS
MECHANICAL LIFE: 40,000 make-and-break cycles.
CONTACT RESISTANCE: 10mΩmax. initial @ 2-4VDC
100mA for both silver and gold plated contacts.
INSULATION RESISTANCE: 1,000MΩmin.
DIELETRIC STRENGTH: 1,000 V RMS@sea level.
OPERATING TEMPERATURE: -30°C to 85°C.

MATERIALS
CASE: Dially phthalate (DAP) (UL94v-0).
ACTUATOR: Brass,chrome plated.
BUSHING: Brass,nickel plated.
HOUSING: Stainless Steel.
TERMINAL/CONTACT: Silver or gold plated.
ROHS: 2002/95/EC

RATING :
R : 0.4 Volt-Amps(VA) max. @20V max.(AC or DC)
Q : 2Amps @250VAC
5Amps @120 VAC or 28 VDC

	符號	原尺寸	修改後尺寸	變更日期
1	Ⓐ			
2	Ⓑ			
3	Ⓒ			
4	Ⓓ			
5	Ⓔ			

SCALE (比例) : 3 : 2

TOLERANCE (公差) :
0.00 mm ± 0.25mm
0.0 mm ± 0.40mm
ANGULAR : ± 5°
FILE NAME : 1MSP1155

TITLE 圖 名	Miniature Toggle Switches			SIZE 圖紙	A4
DWG NO. 圖 號	1MS3T1B1M1QES-5			UNIT 單位	inch mm
REV. 版本	A	DATE 日 期	MAR - 27 - 2007	SHEET 張 數	1 of 1
CHECKED BY 審 核	RICHARD		DRAWN BY 製 圖	FION	

版本 : C

表單編號 : QR-0507