SAC-5P-10,0-115/M12FR - Sensor/actuator cable

1509597

https://www.phoenixcontact.com/in/products/1509597

Please be informed that the data shown in this PDF document is generated from our online catalog. Please find the complete data in the user documentation. Our general terms of use for downloads are valid.

Sensor/actuator cable, 5-position, PUR halogen-free, black-gray RAL 7021, free cable end, on Socket angled M12, coding: A, cable length: 10 m

Your advantages

- Easy and safe: 100 % electrically tested plug-in components

Commercial data

Item number	1509597
Packing unit	1 pc
Minimum order quantity	1 pc
Sales key	*****
Product key	AF1CDA
GTIN	4017918898977
Weight per piece (including packing)	351.1 g
Weight per piece (excluding packing)	347 g
Customs tariff number	85444290
Country of origin	DE

Technical data

Product properties

Product type	Sensor/actuator cable
Application	Standard
Number of positions	5
No. of cable outlets	1
Shielded	no
Coding	A

Insulation characteristics

Overvoltage category	II
Degree of pollution	3

Material specifications

Flammability rating according to UL 94	HB
Seal material	NBR
Material of grip body	TPU, hardly inflammable, self-extinguishing
Contact material	CuSn
Contact surface material	Ni/Au
Contact carrier material	TPU GF
Material for screw connection	Zinc die-cast, nickel-plated
Outer sheath, material	PUR
Conductor material	Bare Cu litz wires

Electrical properties

Insulation resistance	≥ 100 MΩ
Nominal voltage U_N	48 V AC
	60 V DC
Nominal current I_N	4 A
Max. conductor resistance	58 Ω/km

Mechanical properties

Mechanical data

Insertion/withdrawal cycles	≥ 100
Max. bending cycles	4000000

Signaling

Status display	no
Status display present	no

Connection data

Conductor connection

Tightening torque	0.4 Nm (M12 connector)

Connector

Connection 1

Type	free cable end

Connection 2

Type	Socket angled M12
Number of positions	5
Coding type	A

Cable/line

Cable length	10 m

PUR, black, 5th conductor gray [115]

Dimensional drawing	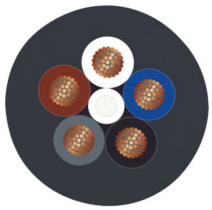
Cable weight	35 kg/km
UL AWM Style	20549 / 10493 (80°C/300 V)
Number of positions	5
Shielded	no
Cable type	PUR, black, 5th conductor gray [115]
Conductor structure signal line	42x 0.10 mm
AWG signal line	22
Conductor cross-section	5x 0.34 mm²
Wire diameter incl. insulation	1.27 mm ±0.02 mm
External cable diameter	5.00 mm ±0.15 mm
Outer sheath, material	PUR
External sheath, color	black-gray RAL 7021
Conductor material	Bare Cu litz wires
Material, filler	PP
Material wire insulation	PP
Single wire, color	brown, white, blue, black, gray
Thickness, insulation	≥ 0.21 mm
Thickness, outer sheath	approx. 0.70 mm
Overall twist	5 cores, twisted
Max. conductor resistance	≤ 58 Ω/km
Nominal voltage, cable	≤ 300 V

Test voltage	≥ 3000 V
Minimum bending radius, fixed installation	5 x D
Minimum bending radius, flexible installation	10 x D
Smallest bending radius, fixed installation	25 mm
Smallest bending radius, movable installation	50 mm
Dynamic load capacity (bending)	Max. bending cycles: 10000000, Bending radius: 50 mm, Traversing path: 10 m, Traversing rate: 3 m/s, Acceleration: 10 m/s²
Dynamic load capacity (torsion)	Torsion: ±180 °/m, Torsion cycles: ≥5000000, Torsional frequency: 35 cycles/min.
Halogen-free	in accordance with DIN VDE 0472 part 815
Flame resistance	in accordance with DIN UL-Style 20549
	in accordance with UL 758/1581 FT2
Resistance to oil	in accordance with DIN EN 60811-2-1
Other resistance	partly UV-resistant (in accordance with DIN EN ISO 4892-2-A)
	hydrolysis and microbe resistant
	Resistant to salt water
	Low adhesion
	abrasion-resistant
Special properties	Flexible cable conduit capable
	Silicone-free
	Free of substances which would hinder coating with paint or varnish
	flexible
Ambient temperature (operation)	-40 °C ... 80 °C (cable, fixed installation)
	-25 °C ... 80 °C (Cable, flexible installation)

Environmental and real-life conditions

Ambient conditions

Degree of protection	IP65
	IP67
	IP68
Ambient temperature (operation)	-25 °C ... 90 °C (Plug / socket)
	-40 °C ... 80 °C (cable, fixed installation)
	-5 °C ... 80 °C (Cable, flexible installation)

Standards and regulations

Standard designation	M12 connector
Standards/specifications	IEC 61076-2-101

Drawings

Dimensional drawing

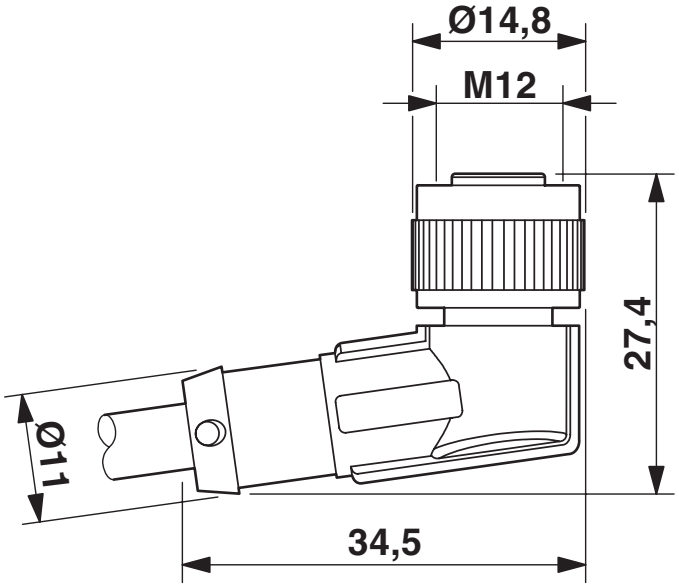

M12 x 1 socket, angled

Schematic diagram

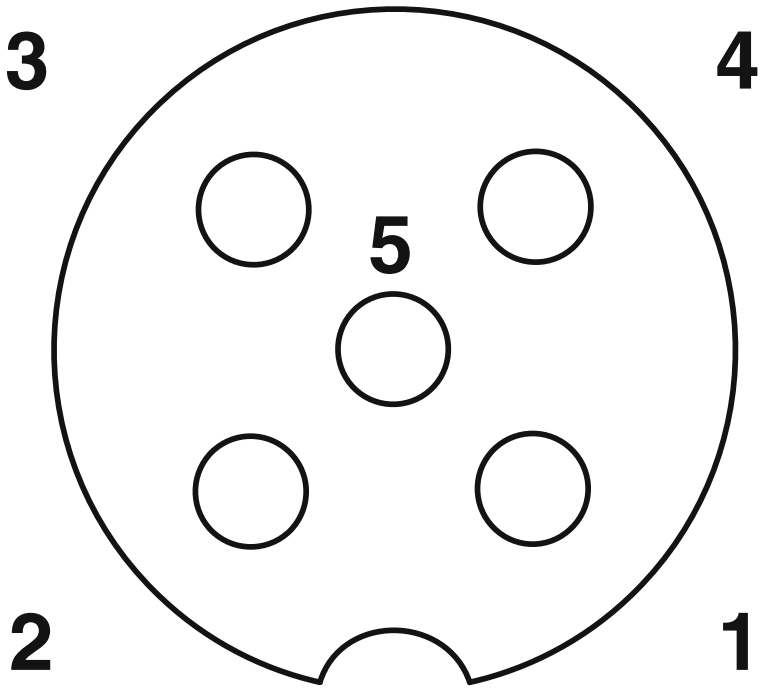

Pin assignment M12 socket, 5-pos., A-coded, socket side view

Circuit diagram

Contact assignment of the M12 sockets

Approvals

To download certificates, visit the product detail page: https://www.phoenixcontact.com/in/products/1509597

UL Listed
Approval ID: FILE E 221474

	Nominal voltage U_N	Nominal current I_N	Cross section AWG	Cross section mm^2
keine				
	125 V	4 A	-	-

cUL Listed
Approval ID: FILE E 221474

	Nominal voltage U_N	Nominal current I_N	Cross section AWG	Cross section mm^2
keine				
	125 V	4 A	-	-

EAC-RoHS
Approval ID: RU D-DE.HB35.B.00387

Classifications

ECLASS

ECLASS-13.0	27060311
ECLASS-15.0	27060311

ETIM

ETIM 10.0	EC001855

UNSPSC

UNSPSC 21.0	26121600

Environmental product compliance

EU RoHS

Fulfills EU RoHS substance requirements	Yes, No exemptions

China RoHS

Environment friendly use period (EFUP)	EFUP-E
	No hazardous substances above the limits

EU REACH SVHC

REACH candidate substance (CAS No.)	No substance above 0.1 wt%

Phoenix Contact 2026 © - all rights reserved
https://www.phoenixcontact.com

PHOENIX CONTACT (I) Pvt. Ltd.
A-58/2, Okhla Industrial Area, Phase - II, New Delhi-110 020

+91.1275.71420
info@phoenixcontact.co.in