

Image may differ from product. See technical specification for details.

# 6311-2RS1/HC5C3WT

## Hybrid ceramic deep groove ball bearing with seals on both sides

Hybrid ceramic single row deep groove ball bearings with seals on both sides have rings made of bearing steel and rolling elements made of bearing grade silicon nitride, which make the bearings electrically insulating. The integral sealing can significantly prolong bearing service life because it keeps lubricant in the bearings and contaminants out. The ceramic rolling elements not only provide protection from electric current damage but also, when compared to same-sized bearings with steel rolling elements, provide enhanced bearing performance, extended bearing service life, higher speed capability, high wear-resistance, high bearing stiffness, reduced risk of smearing and false brinelling, and less sensitivity to temperature gradients, making them suitable for use in dificult conditions and contaminated environments. Also available on request with special sized bore and/or outside diameters, suitable for reworked shafts and housings.

- Protected against electric current damage
- Integral sealing prolongs bearing service life
- Especially suited for use in difficult conditions and contaminated environments
- Typical benefits of single row deep groove ball bearings

# Overview

## Dimensions

| | |
|---|---|
| Bore diameter | 55 mm |
| Outside diameter | 120 mm |
| Width | 29 mm |

## Performance

| | |
|---|---|
| Basic dynamic load rating | 71.5 kN |
| Basic static load rating | 45 kN |
| Limiting speed | 3 800 r/min |

## Properties

| | |
|---|---|
| Filling slots | Without |
| Number of rows | 1 |
| Locating feature, bearing outer ring | Without |
| Bore type | Cylindrical |
| Cage | Sheet metal |
| Matched arrangement | No |
| Radial internal clearance | C3 |
| Material, bearing | Hybrid (ceramic balls) |
| Coating | Without |
| Sealing | Seal on both sides |
| Sealing type | Contact |
| Lubricant | Grease |
| Relubrication feature | Without |
| Indicative carbon footprint for new product | 4.5 kg $CO_2e$ |

## Logistics

| | |
|---|---|
| Product net weight | 1.21 kg |
| eClass code | 23-05-08-01 |
| UNSPSC code | 31171504 |

# Technical specification

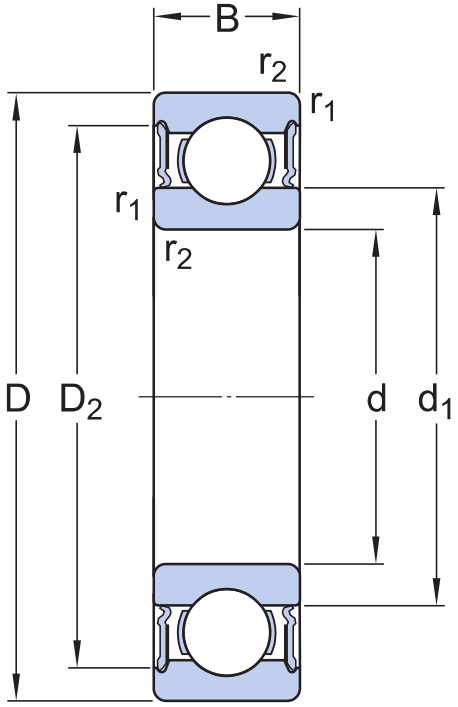


## Dimensions

| | | |
|---|---|---|
| d | 55 mm | Bore diameter |
| D | 120 mm | Outside diameter |
| B | 29 mm | Width |
| $d_1$ | ≈ 75.34 mm | Shoulder diameter inner ring |
| $D_2$ | 103.7 mm | Recess diameter outer ring shoulder |
| $r_{1,2}$ | min. 2 mm | Chamfer dimension |

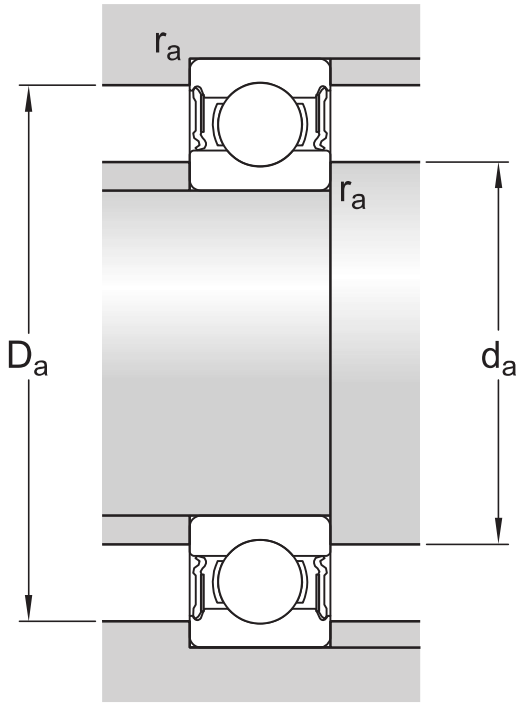


## Abutment dimensions

| | | |
|---|---|---|
| $d_a$ | min. 66 mm | Abutment diameter shaft |
| $D_a$ | max. 109 mm | Abutment diameter housing |
| $r_a$ | max. 2 mm | Fillet radius |

## Calculation data

| | | |
|---|---|---|
| Basic dynamic load rating | C | 71.5 kN |
| Basic static load rating | $C_0$ | 45 kN |
| Fatigue load limit | $P_u$ | 1.37 kN |
| Limiting speed | | 3 800 r/min |
| Calculation factor | $k_r$ | 0.03 |
| Calculation factor | $f_0$ | 13.1 |

## Tolerances and clearances

### GENERAL BEARING SPECIFICATIONS

- Tolerances: Normal (metric), P6, P5, Normal (inch)
- Radial internal clearance: Classes C2 to C5

### BEARING INTERFACES

- Seat tolerances for standard conditions
- Tolerances and resultant fits

## Compatible products

### Mounting tool

| | |
|---|---|
| Bearing fitting tool kit | TMFT 36 |
| Bearing fitting tool kit, PRO version | TMFT 36/PRO |

# Terms of use

By accessing and using this website / app owned and published by AB SKF (publ.) (556007-3495 · Gothenburg) (“SKF”), you agree to the following terms and conditions:

### Warranty Disclaimer and Limitation of Liability

Although every care has been taken to assure the accuracy of the information on this website / app, SKF provides this information "AS IS" and DISCLAIMS ALL WARRANTIES, EXPRESS OR IMPLIED, INCLUDING, BUT NOT LIMITED TO, IMPLIED WARRANTIES OF MERCHANTABILITY AND FITNESS FOR A PARTICULAR PURPOSE. You acknowledge that your use of this website / app is at your sole risk, that you assume full responsibility for all costs associated with use of this website / app, and that SKF shall not be liable for any direct, incidental, consequential, or indirect damages of any kind arising out of your access to, or use of the information or software made available on this website / app.

Any warranties and representations in this website / app for SKF products or services that you purchase or use will be subject to the agreed upon terms and conditions in the contract for such product or service.

Further, for non-SKF websites / apps that are referenced in our website / app or where a hyperlink appears, SKF makes no warranties concerning the accuracy or reliability of the information in these websites / apps and assumes no responsibility for material created or published by third parties contained therein. In addition, SKF does not warrant that this website / app or these other linked websites / apps are free from viruses or other harmful elements.

### Third Party Services

When viewing YouTube content via the SKF website(s) (i.e. using YouTube API Services), you agree to be bound by the YouTube Terms of Service.

### Copyright

Copyright in this website / app copyright of the information and software made available on this website / app rest with SKF or its licensors. All rights are reserved. All licensed material will reference the licensor that has granted SKF the right to use the material. The information and software made available on this website / app may not be reproduced, duplicated, copied, transferred, distributed, stored, modified, downloaded or otherwise exploited for any commercial use without the prior written approval of SKF. However, it may be reproduced, stored and downloaded for use by individuals without prior written approval of SKF. Under no circumstances may this information or software be supplied to third parties.

This website /app includes certain images used under license from Shutterstock, Inc.

### Trademarks and Patents

All trademarks, brand names, and corporate logos displayed on the website / app are the property of SKF or its licensors, and may not be used in any way without prior written approval by SKF. All licensed trademarks published on this website / app reference the licensor that has granted SKF the right to use the trademark. Access to this website / app does not grant to the user any license under any patents owned by or licensed to SKF.

### Changes

SKF reserves the right to make changes or additions to this website / app at any time.