

Image may differ from product. See technical specification for details.

32060 X

Single row tapered roller bearing

Single row tapered roller bearings are designed to accommodate combined radial and axial loads and provide low friction during operation. The inner ring, with rollers and cage, can be mounted separately from the outer ring. These separable and interchangeable components facilitate mounting, dismounting and maintenance. By mounting one single row tapered roller bearing against another and applying a preload, a rigid bearing application can be achieved. Also available on request with special sized bore and/or outside diameters, suitable for reworked shafts and housings.

- High radial and axial load carrying capacity
- Accommodate axial loads in one direction
- Low friction and long service life
- Separable and interchangeable components

Overview

Dimensions

Bore diameter	300 mm
Outside diameter	460 mm
Width, total	100 mm
Width, inner ring	100 mm
Width, outer ring	74 mm
Contact angle	16.2 °

Performance

Basic dynamic load rating	1 644 kN
Basic static load rating	3 000 kN
Reference speed	900 r/min
Limiting speed	1 200 r/min

Properties

Bearing part	Complete bearing
Number of rows	1
Locating feature, bearing outer ring	Without
Bore type	Cylindrical
Cage	Sheet metal
Arrangement of contact angle (double-row bearing)	Not applicable
Matched arrangement	No
Coating	Without
Sealing	Without
Lubricant	None
Relubrication feature	Without
Unit system	Metric
Candidate for remanufacturing	Yes
Indicative carbon footprint for new product	214 kg CO_2e
Indicative carbon footprint for remanufactured product	71.1 kg CO_2e

Logistics

Product net weight	57.8 kg
eClass code	23-05-09-10
UNSPSC code	31171516

Technical specification

Dimension series	4GD

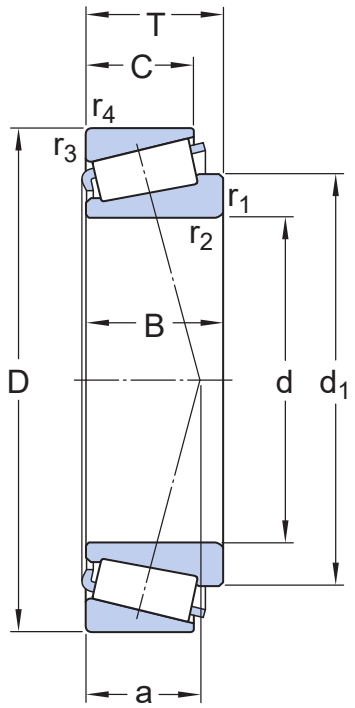

Dimensions

d	300 mm	Bore diameter
D	460 mm	Outside diameter
T	100 mm	Bearing width, total
d_1	≈ 377.3 mm	Shoulder diameter of inner ring
B	100 mm	Width of inner ring
C	74 mm	Width of outer ring
$r_{1,2}$	min. 5 mm	Chamfer dimension of inner ring
$r_{3,4}$	min. 4 mm	Chamfer dimension of outer ring
a	97 mm	Distance side face to pressure point

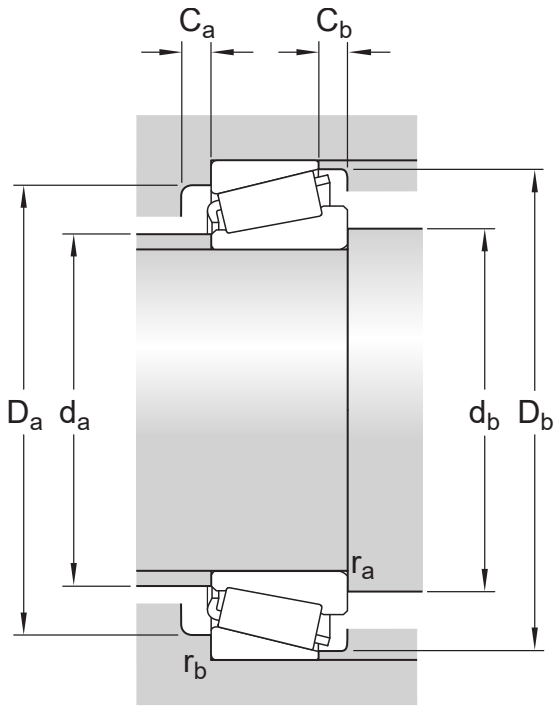

Abutment dimensions

d_a	max. 330 mm	Diameter of shaft abutment
d_b	min. 322 mm	Diameter of shaft abutment
D_a	min. 404 mm	Diameter of housing abutment
D_a	max. 440 mm	Diameter of housing abutment
D_b	min. 439 mm	Diameter of housing abutment
C_a	min. 10 mm	Minimum width of space required in housing on large side face
C_b	min. 26 mm	Minimum width of space required in housing on small side face
r_a	max. 4 mm	Radius of shaft fillet
r_b	max. 3 mm	Radius of housing fillet

Calculation data

Basic dynamic load rating	C	1 644 kN
Basic static load rating	C_0	3 000 kN
Fatigue load limit	P_u	245 kN
Reference speed		900 r/min
Limiting speed		1 200 r/min
Limiting value	e	0.43

Calculation factor	Y	1.4
Calculation factor	Y_0	0.8

Tolerances and clearances

GENERAL BEARING SPECIFICATIONS

- Tolerances:
  metric bearings: Normal and CL7C, CLN
  inch bearings: Normal and CL, deviating width

BEARING INTERFACES

- Seat tolerances for standard conditions
- Tolerances and resultant fit

Terms of use

By accessing and using this website / app owned and published by AB SKF (publ.) (556007-3495 · Gothenburg) (“SKF”), you agree to the following terms and conditions:

Warranty Disclaimer and Limitation of Liability

Although every care has been taken to assure the accuracy of the information on this website / app, SKF provides this information "AS IS" and DISCLAIMS ALL WARRANTIES, EXPRESS OR IMPLIED, INCLUDING, BUT NOT LIMITED TO, IMPLIED WARRANTIES OF MERCHANTABILITY AND FITNESS FOR A PARTICULAR PURPOSE. You acknowledge that your use of this website / app is at your sole risk, that you assume full responsibility for all costs associated with use of this website / app, and that SKF shall not be liable for any direct, incidental, consequential, or indirect damages of any kind arising out of your access to, or use of the information or software made available on this website / app.

Any warranties and representations in this website / app for SKF products or services that you purchase or use will be subject to the agreed upon terms and conditions in the contract for such product or service.

Further, for non-SKF websites / apps that are referenced in our website / app or where a hyperlink appears, SKF makes no warranties concerning the accuracy or reliability of the information in these websites / apps and assumes no responsibility for material created or published by third parties contained therein. In addition, SKF does not warrant that this website / app or these other linked websites / apps are free from viruses or other harmful elements.

Third Party Services

When viewing YouTube content via the SKF website(s) (i.e. using YouTube API Services), you agree to be bound by the YouTube Terms of Service.

Copyright

Copyright in this website / app copyright of the information and software made available on this website / app rest with SKF or its licensors. All rights are reserved. All licensed material will reference the licensor that has granted SKF the right to use the material. The information and software made available on this website / app may not be reproduced, duplicated, copied, transferred, distributed, stored, modified, downloaded or otherwise exploited for any commercial use without the prior written approval of SKF. However, it may be reproduced, stored and downloaded for use by individuals without prior written approval of SKF. Under no circumstances may this information or software be supplied to third parties.

This website /app includes certain images used under license from Shutterstock, Inc.

Trademarks and Patents

All trademarks, brand names, and corporate logos displayed on the website / app are the property of SKF or its licensors, and may not be used in any way without prior written approval by SKF. All licensed trademarks published on this website / app reference the licensor that has granted SKF the right to use the trademark. Access to this website / app does not grant to the user any license under any patents owned by or licensed to SKF.

Changes

SKF reserves the right to make changes or additions to this website / app at any time.