SICK.COM

DATA SHEET

M4P-SA03400A00

deTem
Safety multibeam sensors

Sensor Intelligence

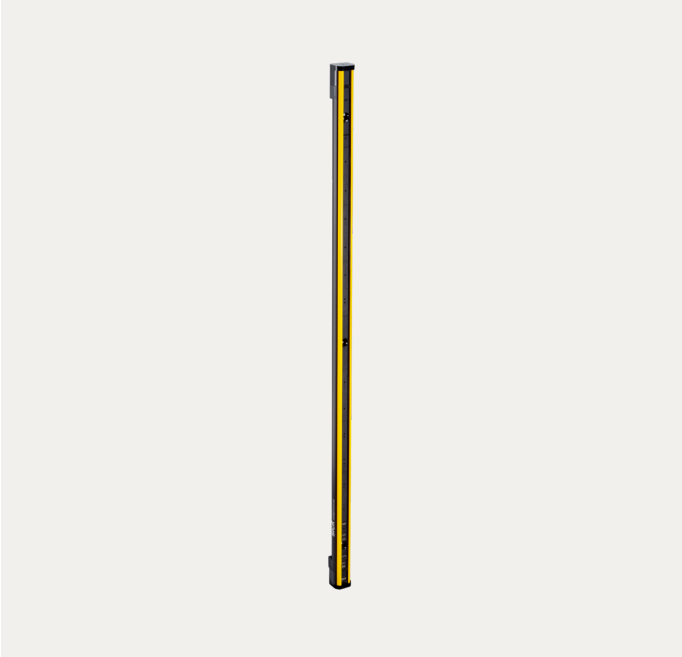

Illustration may differ

SAFETY MULTIBEAM SENSORS

M4P-SA03400A00

ORDERING INFORMATION

Type	part no.
M4P-SA03400A00	1128428

Further device versions and accessories at www.sick.com/deTem

DETAILED TECHNICAL DATA

FEATURES

Product version	deTem4
Application	Normal industrial environment
Functional principle	Sender/receiver
System part	Sender
Scanning range	90 m
Number of beams	3
Beam separation	400 mm
Synchronization	Optical synchronization
Items supplied	Sender

SAFETY-RELATED PARAMETERS

Type	Type 4 (IEC 61496)
Safety integrity level	SIL 3 (IEC 61508, IEC 62061)
Category	Category 4 (ISO 13849)
Performance level	PL e (ISO 13849)
PFH_D (mean probability of a dangerous failure per hour)	6.6×10^{-9}
T_M (mission time)	20 years (ISO 13849)
Safe state in the event of a fault	At least one OSSD is in the OFF state.

FUNCTIONS

Note	The deTem4 safety light-beam sensor can be used with different function packages. The function packages are determined by the equipment used.
Function package SP1	Protective operation Beam coding Restart interlock External device monitoring (EDM) Application diagnostic output (ADO) IO-Link Equipment: Sender and receiver with SP1 system plug
Function package SP2	Function package SP1 included Manual adjustment of the protective field width Muting (2-signal muting) Partial muting Equipment: Sender with SP1 system plug and receiver with SP2 system plug
Function package DMM4	Function package SP2 included Transmitting power adjustment Muting (4-signal muting) Operating mode selection Inputs for safety sensors (SDI) Equipment: Sender and receiver with SP1 system plug and DMM4 extension module

INTERFACES

System connection	Depending on system plug (M12 male connector, 5-pin or 8-pin)
Configuration method	DIP switch on system plug PC software via DMM4 (Safety Designer)
Display elements	Status LEDs

ELECTRONICS

Protection class	III (IEC 61140) [1]
Supply voltage V_S	24 V DC (19.2 V DC ... 28.8 V DC) [2]
Residual ripple	≤ 10 % [3]

[1] The system must be supplied with SELV/PELV in accordance with IEC 60204-1.

[2] The external voltage supply must be capable of buffering brief mains voltage failures of 20 ms as specified in EN 60204-1. Suitable power supplies are available as accessories from SICK.

[3] Within the limits of V_S.

MECHANICS

Dimensions	See dimensional drawing
Housing cross-section	30.7 mm x 34 mm
Material	
Housing	Aluminum extruded profile
Front screen	Polycarbonate, scratch-resistant coating

AMBIENT DATA

Enclosure rating	IP65 (IEC 60529) IP67 (IEC 60529)
Ambient operating temperature	–30 °C ... +55 °C
Storage temperature	–30 °C ... +70 °C
Air humidity	15 % ... 95 %, Non-condensing
Vibration resistance	5 ... 150 Hz, 3,5 mm / 1 g (EN 60068-2-6)
Shock resistance	15 g / 6 ms (EN 60068-2-27)
Class	3M4 (IEC TR 60721-4-3)
EMC	According to IEC 61496-1, IEC 61000-6-2, IEC 61000-6-4

OTHER INFORMATION

Type of light	Near-infrared (NIR), invisible
Wave length	850 nm

CERTIFICATES

EU declaration of conformity	✓
UK declaration of conformity	✓
ACMA declaration of conformity	✓
Moroccan declaration of conformity	✓
China RoHS	✓
ULus approval	✓
cUL approval	✓
EC-Type-Examination approval	✓
Information according to Art. 3 of Data Act (Regulation EU 2023/2854)	✓

DIMENSIONAL DRAWING

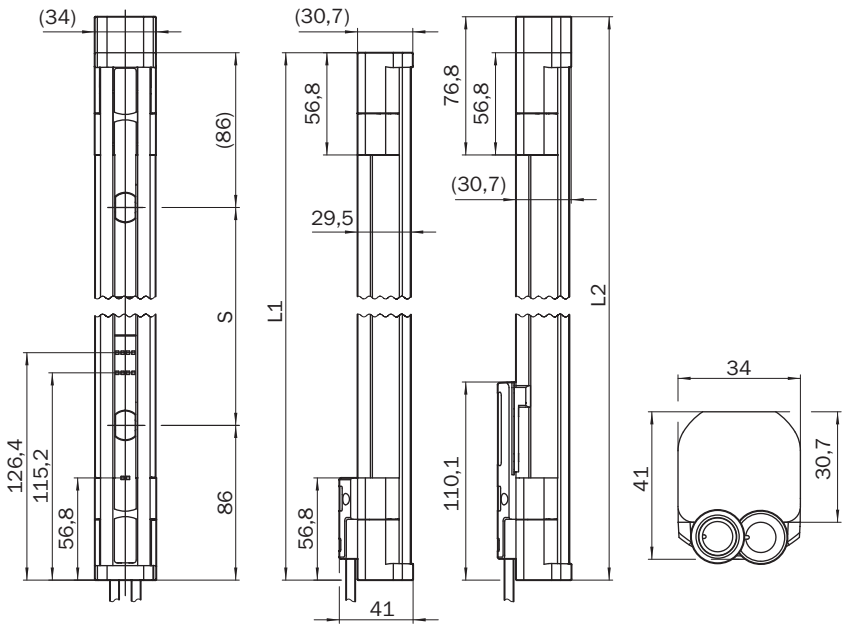

Dimensions in mm (inch)

Number of beams	Beam separation S	L1 (height without top LED)	L2 (height with top LED)
1	–	313	–
2	500	672	692
3	400	972	992
4	300	1072	1092

CONNECTION DIAGRAM DETEC4 / DETEM4 ON DMM4, CONNECTION EXAMPLE, MUTING, RESET, OVERRIDE, SDI

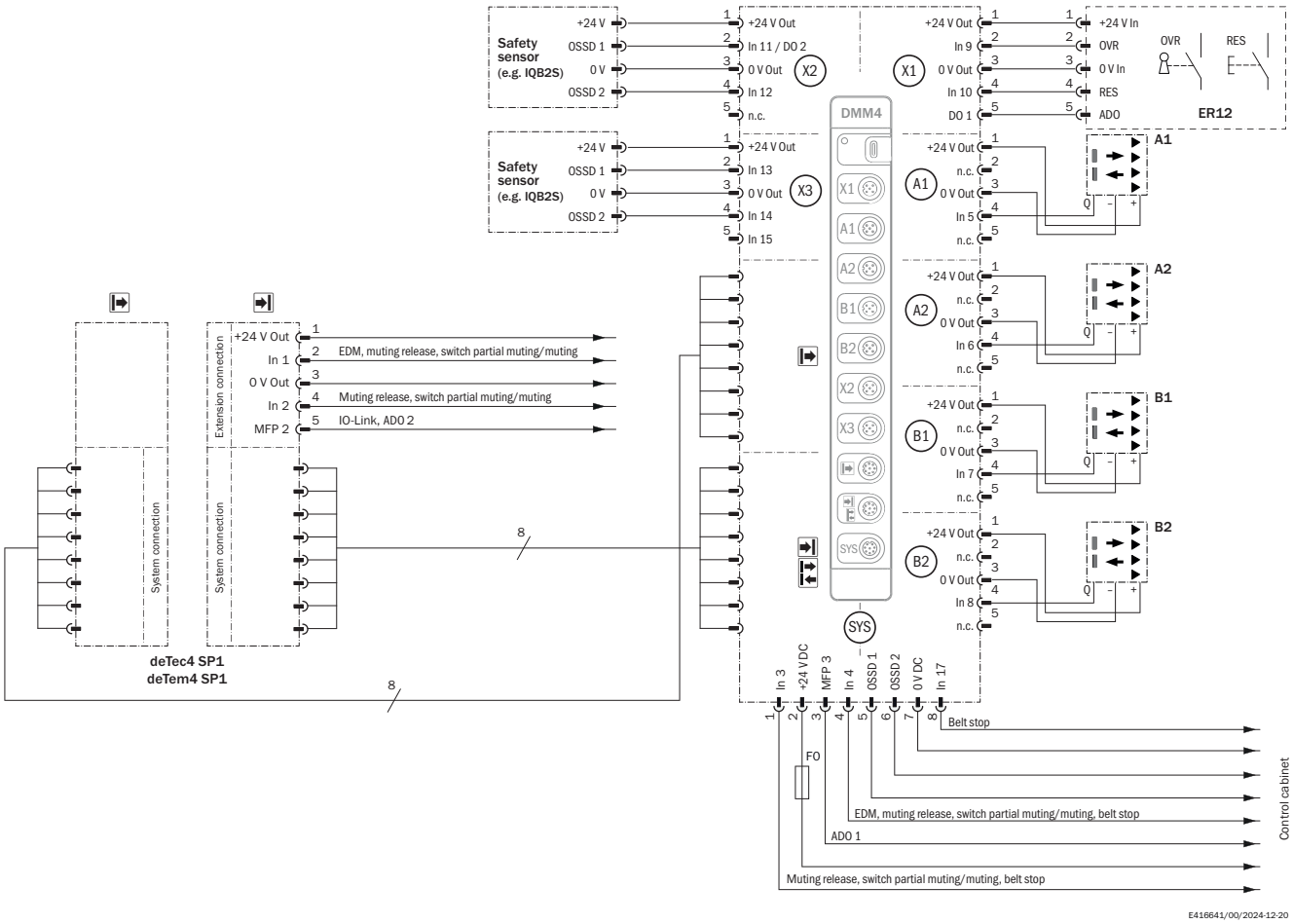

The requirements in the operating instructions of the devices used must be adhered to.

CONNECTION DIAGRAM DETEC4 / DETEM4 ON DMM4, MUTING, RESET, OVERRIDE, OPERATING MODE SELECTION

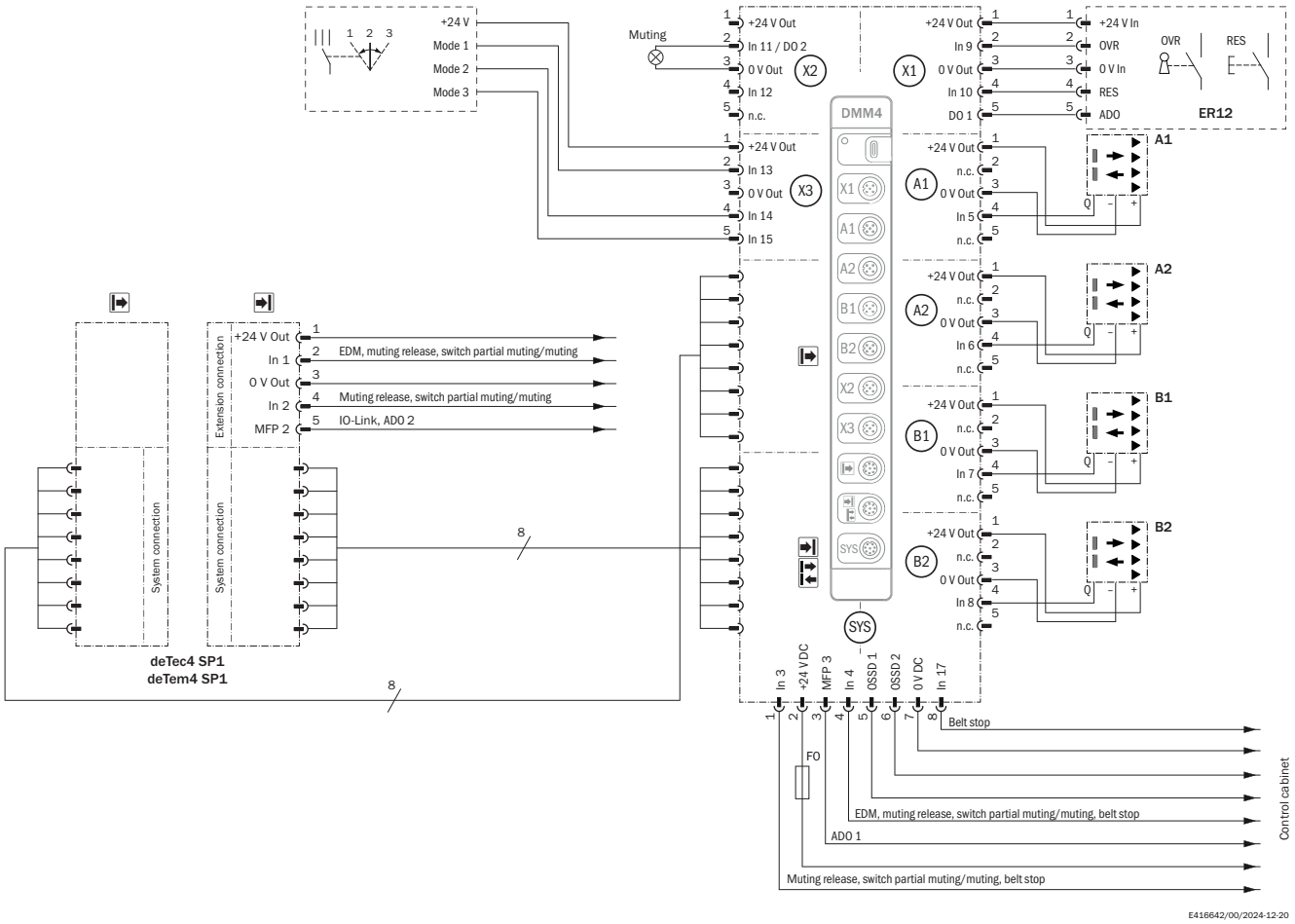

The requirements in the operating instructions of the devices used must be adhered to.

Further information as well as suitable accessories, example applications and downloads such as CAD dimensional models, operating instructions and software can be found at www.sick.com/1128428

SICK AG
WALDKIRCH
GERMANY
SICK.COM

SICK AT A GLANCE

SICK is a leading global technology company for intelligent sensors and integrated solutions in industrial automation. Our technologies set benchmarks, making your industrial processes more efficient, safer and more sustainable – both in logistics and manufacturing operations.

SICK combines sensor intelligence with industry expertise and certified consulting services. We provide the ideal foundation for scalable as well as tailor-made automation solutions and create added value along the entire value chain. Our close partnerships with our customers are more than just a promise: Together, we optimize productivity, improve quality, protect health and safety, and help build a sustainable future. All with empathy and trust.

Since 1946, we have been developing innovative technologies with passion and a pioneering spirit. With a global network in around 40 countries, SICK has a global presence and is always close by. The company's headquarters are located in Waldkirch near Freiburg, Germany. Our customers benefit from our understanding of both local and global requirements, which enables us to deliver tailor-made solutions

SICK
Sensor Intelligence