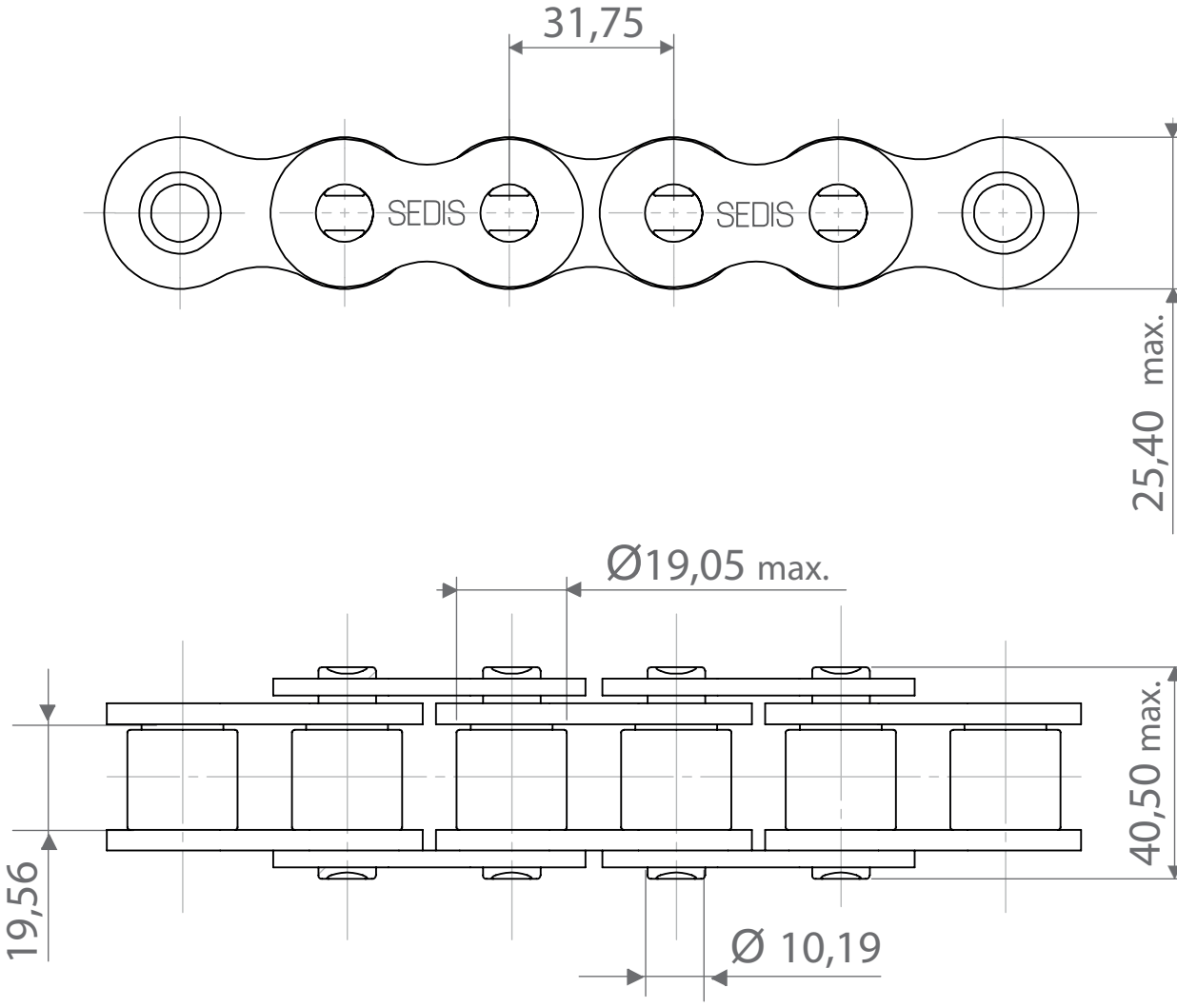

dimensions in mm