RGC2, RGC3

3-phase solid state relays with integrated heatsink

Description

This product is intended to replace mechanical contactors especially when switching is frequent. The smallest product width in the **RGC2**, **RGC3** range is 54 mm (3xDIN) and goes up to 70 mm. 2-pole and 3-pole switching options are available.

Apart from resistive and slightly inductive loads, the **RGC** is certified for motor switching with associated motor ratings. A green LED gives indication of control voltage presence. Fan operation is controlled for the versions which have an integrated fan.

Detection of SSR overheat, mains loss, SSR malfunction and load loss is possible with the **RGC..M** versions. An EMR alarm output is available for remote signaling. An additional feature with the **RGC..M** is the electronic auxiliary output. The RGC..M has additional LEDs for load status and alarm status indication.

Specifications are at a surrounding temperature of 25°C unless otherwise specified.

Benefits

- **Panel space savings.** Concentrated power; the RGC 3-phase switching range can handle up to 65 AAC per pole (or 75 AAC for 2-pole switching) in a 70 mm wide footprint.
- **Long lifetime.** Wire bonding technology reduces thermal and mechanical stresses of the output chips resulting in a larger number of possible operational cycles compared to other assembly technologies.
- **Low machine downtime.** Integrated overvoltage protection prevents the solid state relay from breaking down due to uncontrolled transients that may occur on the lines.
- **Ease of use.** The RGC2A and RGC3A are ready to use solutions provided with integrated heatsink thus eliminating the need for the user to calculate the size of heatsink needed for adequate thermal dissipation.
- **Fast wiring**. Power connections for models rated ≥30 A are equipped with terminals that can handle cables up to 25 mm² / AWG3 cables.
- **Integrated monitoring for timely detection of malfunctions.** Optional feature on the 3-phase RGC series that enables detection of mains loss, over temperature and solid state relay or load malfunction.
- **Accommodates UL508A requirements for Industrial Control Panels.** The RGC 3-phase range is certified as a listed product. All models carry a 100 kArms Short Circuit Current Rating.

Applications

Plastic injection machines, Extrusion machines, Blow moulding machines, Thermoformers, Dryers, Electrical ovens, Fryers, Shrink tunnels, Air handling units, Sterilisation equipment, Climatic chambers, Ovens and furnaces.

Main features

- 3-phase zero cross switching solid state contactor for 3-pole or 2-pole switching
- Ratings up to 660 VAC 75 AAC/pole (RGC2A), 65 AAC/pole (RGC3A) @ T_A 40°C
- Optionally integrated monitoring for SSR and load malfunction with alarm output for remote signalling with the RGC..M

Order code

RGC2A □□□□□E□□

Enter the code entering the corresponding option instead of □. Refer to selection guide section for valid part numbers.

Code	Option	Description	Comments
R	-	Solid State Relay (RG)	
G	-		
C	-	With integrated heatsink	
2	-	2-pole switching, 1-pole direct	
A	-	Switching mode: zero cross	
□	22	Rated voltage: 42-242 VAC, 800 Vp	For RGC..25 only
	60	Rated voltage: 42-660 VAC, 1200 Vp	90 - 660 VAC for RGC..M
□	D	Control voltage: 5-32 VDC	
	A	Control voltage: 20-275 VAC, 24-190 VDC	AC control range for RGC..A..A.. limited to 20-275 VAC only
□	10	Rated current	
	25	Rated current	
	40	Rated current	
	75	Rated current	
□	K	Screw connection for control terminals	
	G	Box clamp connection for control terminals	For RGC..M, RGC..F
□	K	Screw connection for power terminals	For RGC..10, RGC..25
	G	Box clamp connection for power terminals	For RGC..40, RGC..75
E	-	Contactor configuration	
□	D	External supply: 24 VDC	For RGC..F or RGC..M only
	A	External supply: 90-250 VAC	For RGC..F or RGC..M only
□	F	Integrated fan with over temperature protection (OTP) and EMR alarm output	For RGC..75
	M	Monitoring for mains loss, load loss, SSR short circuit, open circuit and over-temperature with EMR alarm output and auxiliary output	RGC..M is suitable only for resistive loads

Selection guide - 2-pole switching, 1-pole direct (RGC2)

Rated voltage	Control voltage	Fea-tures	External supply, Us	Rated operational current per pole @ 40°C			
				10 AAC (1800 A²s)	25 AAC (1800 A²s)	40 AAC (6600 A²s)	75 AAC (15000 A²s)
				Product width			
				54 mm	54 mm	70 mm	70 mm + fan
220 VAC	5 - 32 VDC	-	-	-	RGC2A22D25KKE	-	-
	20-275 VAC, 24-190 VDC	-	-	-	RGC2A22A25KKE	-	-
600 VAC	5 - 32 VDC	- OTP OTP	- 24 VDC 90 - 250 VAC	RGC2A60D10KKE - -	RGC2A60D25KKE - -	RGC2A60D40KGE - -	- RGC2A60D75GGEDF RGC2A60D75GGEAF
	20-275 VAC, 24-190 VDC	-	-	RGC2A60A10KKE	RGC2A60A25KKE	RGC2A60A40KGE	-
	20-275 VAC	OTP	90 - 250 VAC	-	-	-	RGC2A60A75GGEAF

Selection guide - 2-pole switching, 1-pole direct with monitoring (RGC2..M)

Rated voltage	Control voltage	Fea-tures	External supply, Us	Rated operational current per pole @ 40°C			
				-	25 AAC (1800 A²s)	40 AAC (6600 A²s)	75 AAC (15000 A²s)
				Product width			
				-	54 mm	70 mm	70 mm + fan
600 VAC	5 - 32 VDC	Monitor-ing	24 VDC 90-250 VAC	-	RGC2A60D25GKEDM -	RGC2A60D40GGEDM -	RGC2A60D75GGEDFM RGC2A60D75GGEAFM
	20-275 VAC	Monitor-ing	90-250 VAC	-	RGC2A60A25GKEAM	RGC2A60A40GGEAM	RGC2A60A75GGEAFM

KKE: input terminals = screw, output terminals = screw
KGE: input terminals = screw, output terminals = box clamp
GKE: input terminals = box clamp, output terminals = screw
GGE: input terminals = box clamp, output terminals = box clamp

Order code

RGC3A □□□ □□ E □□

Enter the code entering the corresponding option instead of □. Refer to selection guide section for valid part numbers.

DIN rail mount version

Code	Option	Description	Comments
R	-	Solid State Relay (RG)	
G	-		
C	-	With integrated heatsink	
3	-	3-pole switching	
A	-	Switching mode: zero cross	
□	22	Rated voltage: 42-242 VAC, 800 Vp	For RGC..20 only
	60	Rated voltage: 42-660 VAC, 1200 Vp	90 - 660 VAC for RGC..M
□	D	Control voltage: 5-32 VDC	
	A	Control voltage: 20-275 VAC, 24-190 VDC	AC control range for RGC..A..A.. limited to 20-275 VAC only
□	10	Rated current	Not available with monitoring option
	20	Rated current	
	25	Rated current	
	30	Rated current	
	40	Rated current	Not available with monitoring option
	65	Rated current	
□	K	Screw connection for control terminals	
	G	Box clamp connection for control terminals	For RGC..M, RGC..F
□	K	Screw connection for power terminals	For RGC..10, RGC..20, RGC..25
	G	Box clamp connection for power terminals	For RGC..30, RGC..40, RGC..75
E	-	Contactor configuration	
□	D	External supply: 24 VDC	For RGC..F or RGC..M only
	A	External supply: 90-250 VAC	For RGC..F or RGC..M only
□	F	Integrated fan with over temperature protection (OTP) and EMR alarm output	For RGC..65
	M	Monitoring for mains loss, load loss, SSR short circuit, open circuit and over-temperature with EMR alarm output and auxiliary output	RGC..M is suitable only for resistive loads

Panel mount version

Code	Option	Description	Comments
R	-	Solid State Relay (RG)	
G	-		
C	-	With integrated heatsink	
3	-	3-pole switching	
A	-	Switching mode: zero cross	
60	-	Rated voltage: 42-660 VAC, 1200 Vp	
□	D	Control voltage: 5-32 VDC	
	A	Control voltage: 20-275 VAC, 24-190 VDC	AC control range for RGC..A..A.. limited to 20-275 VAC only
48	-	Rated current	
K	-	Screw connection for control terminals	
G	-	Box clamp connection for power terminals	
E	-	Contactor configuration	

Selection guide - 3-pole switching (RGC3) - DIN rail mount versions

Rated voltage	Control voltage	Fea-tures	External supply, Us	Rated operational current @ 40°C per pole					
				10 AAC (1800 A²s)	20 AAC (1800 A²s)	25 AAC (1800 A²s)	30 AAC (6600 A²s)	40 AAC (6600 A²s)	65 AAC (15000 A²s)
				Product width					
				54 mm	54 mm	70 mm	70 mm	54 mm + fan	70 mm + fan
220 VAC	5 - 32 VDC	-	-	-	RGC3A22D20KKE	-	-	-	-
	20-275 VAC, 24-190 VDC	-	-	-	RGC3A22A20KKE	-	-	-	-
600 VAC	5 - 32 VDC	- OTP OTP	- 24 VDC 90 - 250 VAC	RGC3A60D10KKE - -	RGC3A60D20KKE - -	RGC3A60D25KKE - -	RGC3A60D30KGE - -	- RGC3A60D40GGEDF -	- RGC3A60D65GGEDF RGC3A60D65GGEAF
	20-275 VAC, 24-190 VDC	-	-	RGC3A60A10KKE	RGC3A60A20KKE	RGC3A60A25KKE	RGC3A60A30KGE	-	-
	20-275 VAC	OTP	90 - 250 VAC	-	-	-	-	RGC3A60A40GGEAF	RGC3A60A65GGEAF

Selection guide - 3-pole switching with monitoring (RGC3..M) - DIN rail mount versions

Rated voltage	Control voltage	Fea-tures	External supply, Us	20 AAC (1800 A²s)	25 AAC (1800 A²s)	30 AAC (6600 A²s)	65 AAC (15000 A²s)
				54 mm	70 mm	70 mm	70 mm + fan
600 VAC	5 - 32 VDC	Monitoring	24 VDC 90-250 VAC	RGC3A60D20GKEDM -	RGC3A60D25GKEDM -	RGC3A60D30GGEDM -	RGC3A60D65GGEDFM RGC3A60D65GGEAFM
	20-275 VAC	Monitoring	90-250 VAC	RGC3A60A20GKEAM	RGC3A60A25GKEAM	RGC3A60A30GGEAM	RGC3A60A65GGEAFM

Selection guide - 3-pole switching (RGC3) - Panel mount versions

Rated voltage	Control voltage	Fea-tures	External supply, Us	Rated operational current @ 40°C per pole
				48 AAC (15000 A²s)
				Product width
				157 mm
600 VAC	5 - 32 VDC	-	-	RGC3A60D48KGE
	20-275 VAC	-	-	RGC3A60A48KGE

KKE: input terminals = screw, output terminals = screw
KGE: input terminals = screw, output terminals = box clamp
GKE: input terminals = box clamp, output terminals = screw
GGE: input terminals = box clamp, output terminals = box clamp

Carlo Gavazzi compatible components

Description	Component code	Notes
Fans	RG3FAN40	Fan accessory for RGC3..40
	RG3FAN60	Fan accessory for RGC2..75 and RGC3..65

Structure

RGC

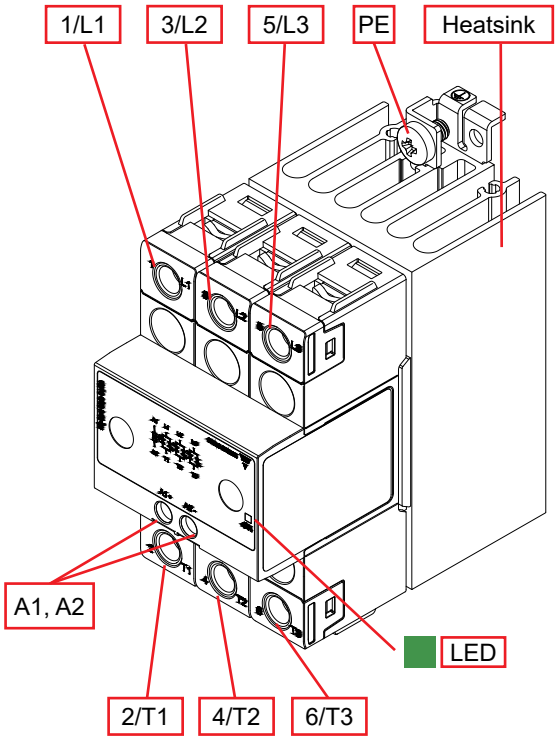

RGC..M

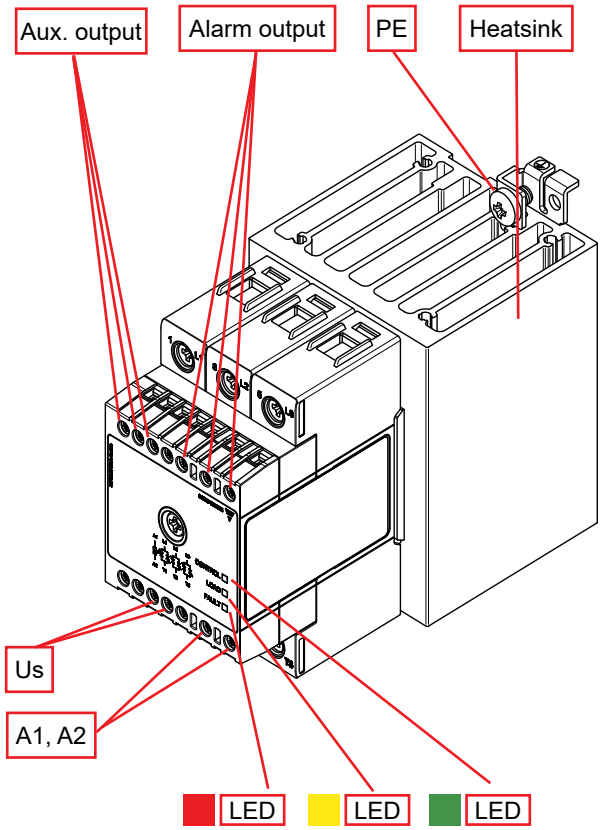

Element	Component	Function
1/L1, 3/L2, 5/L3	Power connections	Mains connections
2/T1, 4/T2, 6/T3	Power connections	Load connections
Aux. output	Auxiliary output	Changes state with change of state of SSR output
Alarm output	Electro mechanical relay	Alarm output; normally open, normally closed
A1, A2	Control connection	Terminals for control voltage
Us	Supply connection	Terminals for supply voltage
Green LED	CONTROL indicator	Indicates presence of control voltage and supply voltage
Yellow LED	LOAD indicator	Indicates the load status
Red LED	ALARM indicator	Indicates presence of an alarm condition
Heatsink	Integrated heatsink	DIN rail and panel mount versions available
PE	Protective Earth	Connection for Protective Earth

RGC is available in DIN rail and panel mount versions. DIN rail mount solutions at higher current ratings include forced ventilation. Check 'Dimensions' sections for further information.

Features

General data

Material	PA66 (UL94 V0), RAL7035 850°C, 750°C/2s according to GWIT and GWFI requirements of EN 60335-1
Mounting	DIN rail (RGC3..48: Panel mount)
Touch Protection	IP20
Overvoltage Category	III, 6 kV (1.2/50 µs) rated impulse withstand voltage
Isolation	Input and Output to Case: 4000 Vrms Input to Output: 4000 Vrms (RGC..M: 2500 Vrms)
Weight	RGC..10: approx. 470 g RGC2..25, RGC3..20 (M): approx. 600 g (680 g) RGC2..40, RGC3..25, RGC3..30 (M): approx. 850 g (920 g) RGC3..40: approx. 740 g RGC3..48: approx. 2400 g RGC2..75, RGC3..65: approx. 980 g

Performance

RGC2.. Output

	RGC2..22..25	RGC2..60..10	RGC2..60..25	RGC2..60..40	RGC2..60..75
Operational voltage range, Ue	42 - 242 VAC	42 - 660 VAC 90 - 660 VAC (RGC..M)			
Permissable voltage unbalance	15% between L1/L2/L3				
Blocking voltage	800 Vp	1200 Vp			
Max. operational current per pole[1]: AC-51 @ Ta=25°C	32 AAC	10 AAC	32 AAC	50 AAC	85 AAC
Max. operational current per pole[1]: AC-51 @ Ta=40°C	27 AAC	10 AAC	27 AAC	40 AAC	75 AAC
Max. operational current per pole[1]: AC-53a @ Ta=40°C	11.5 AAC	5 AAC	11.5 AAC	16.5 AAC	28 AAC
Operational frequency range	45 to 65 Hz				
Output protection	Integrated varistor				
Leakage current @ rated voltage	5 mAAC				
Minimum operational current RGC..F, RGC..M	250 mAAC 1.2 AAC	250 mAAC -	250 mAAC 1.2 AAC	400 mAAC 1.2 AAC	500 mAAC 1.2 AAC
Repetitive overload current (Motor rating) UL508: Ta=40°C, t_{ON}=1 s, t_{OFF}=9 s, 50 cycles	61 AAC	30 AAC	61 AAC	107 AAC	154 AAC
Non-repetitive surge current (I_{TSM}), t=10 ms	600 Ap	600 Ap	600 Ap	1150 Ap	1750 Ap
I^2t for fusing (t=10 ms), minimum	1800 A²s	1800 A²s	1800 A²s	6600 A²s	15000 A²s
No. of motor starts per hour[2] (x: 6, Tx:6s, F:50%) @ 40°C	30				
Power factor	>0.5 at rated voltage				
Critical dV/dt (@Tj init = 40°C)	1000 V/µs				

1. Refer to Current Derating Curves. Max. VDE AC-51 rating for RGC2..10 is 9AAC
2. Overload profile for AC-53a;
Ie: AC-53a: xIe-Tx: F-S, where Ie = nominal current (AC-53a AAC), xIe = overload current (AAC), Tx = duration of overload current (s), F = duty cycle (%), S = number of starts. Example; 5A: AC-53a: 30 - 6 : 50 - 10 = max. 10 starts for the RGC2..10 with an overload profile of 30 A for 6 seconds with a duty cycle of 50%.

RGC3.. Output

	RGC3..22..20	RGC3..60..10	RGC3..60..20	RGC3..60..25
Operational voltage range, Ue	42 242 VAC	42 - 660 VAC 90 - 660 VAC (RGC..M)		
Permissable voltage unbalance	15% between L1/L2/L3			
Blocking voltage	800 Vp	1200 Vp		
Max. operational current per pole[1]: AC-51 @ Ta=25°C	25 AAC	10 AAC	25 AAC	32 AAC
Max. operational current per pole[1]: AC-51 @ Ta=40°C	20 AAC	10 AAC	20 AAC	28 AAC
Max. operational current per pole[1]: AC-53a @ Ta=40°C	10 AAC	5 AAC	10 AAC	11 AAC
Operational frequency range	45 to 65 Hz			
Output protection	Integrated varistor			
Leakage current @ rated voltage	5 mAAC			
Minimum operational current RGC..F, RGC..M	250 mAAC 1.2 AAC	250 mAAC -	250 mAAC 1.2 AAC	250 mAAC 1.2 AAC
Repetitive overload current (Motor rating) UL508: Ta=40°C, t_{ON}=1 s, t_{OFF}=9 s, 50 cycles	61 AAC	30 AAC	61 AAC	84 AAC
Non-repetitive surge current (I_{TSM}), t=10 ms	600 Ap	600 Ap	600 Ap	600 Ap
I^2t for fusing (t=10 ms), min.	1800 A^2s	1800 A^2s	1800 A^2s	1800 A^2s
No. of motor starts per hour[2] (x: 6, Tx:6s, F:50%) @ 40°C	30			
Power factor	>0.5 at rated voltage			
Critical dV/dt (@Tj init = 40°C)	1000 V/µs-			

	RGC3..60..30	RGC3..60..40	RGC3..60..48	RGC3..60..65
Operational voltage range, Ue	42 - 660 VAC 90 - 660 VAC (RGC..M)			
Permissable voltage unbalance	15% between L1/L2/L3			
Blocking voltage	1200 Vp			
Max. operational current per pole[1]: AC-51 @ Ta=25°C	37 AAC	42 AAC	55 AAC	71 AAC
Max. operational current per pole[1]: AC-51 @ Ta=40°C	30 AAC	42 AAC	48 AAC	66 AAC
Max. operational current per pole[1]: AC-53a @ Ta=40°C	14 AAC	17 AAC	23 AAC	25 AAC
Operational frequency range	45 to 65 Hz			
Output protection	Integrated varistor			
Leakage current @ rated voltage	5 mAAC			
Minimum operational current RGC..F, RGC..M	400 mAAC 1.2 AAC	400 mAAC 1.2 AAC	500 mAAC 1.2 AAC	500 mAAC 1.2 AAC
Repetitive overload current (Motor rating) UL508: Ta=40°C, t_{ON}=1 s, t_{OFF}=9 s, 50 cycles	107 AAC	107 AAC	154 AAC	154 AAC
Non-repetitive surge current (I_{TSM}), t=10 ms	1150 Ap	1150 Ap	1750 Ap	1750 Ap
I^2t for fusing (t=10 ms), min.	6600 A^2s	6600 A^2s	15000 A^2s	15000 A^2s
No. of motor starts per hour[2] (x: 6, Tx:6s, F:50%) @ 40°C	30			
Power factor	>0.5 at rated voltage			
Critical dV/dt (@Tj init = 40°C)	1000 V/µs			

1. Refer to Current Derating Curves. Max. VDE AC-51 rating for RGC2..10 is 9 AAC
2. Overload profile for AC-53a

Motor Ratings: HP (UL508) / kW (EN/IEC 60947-4-2) @ 40°C

	115 VAC	230 VAC	400 VAC	480 VAC	600 VAC
RGC2..10	½ HP / 0.37 kW	1 HP / 1.1 kW	2 HP / 1.5 kW	3 HP / 2.2 kW	3 HP / 3 kW
RGC2..25	1½ HP / 1.1 kW	3 HP / 3.0 kW	5 HP / 5.5 kW	7½ HP / 5.5 kW	10 HP / 9.0 kW
RGC2..40	3 HP / 1.5 kW	5 HP / 4.0 kW	10 HP / 7.5 kW	10 HP / 9.0 kW	15 HP / 11.0 kW
RGC2..75	5 HP / 3.0 kW	10 HP / 7.5 kW	15 HP / 11.0 kW	20 HP / 15.0 kW	25 HP / 22.0 kW
RGC3..10	½ HP / 0.37 kW	1 HP / 1.1 kW	2 HP / 1.5 kW	3 HP / 2.2 kW	3 HP / 3 kW
RGC3..20	1 HP / 0.75 kW	3 HP / 2.2 kW	5 HP / 4.0 kW	7½ HP / 5.5 kW	10 HP / 7.5 kW
RGC3..25	2 HP / 1.1 kW	3 HP / 2.2 kW	7½ HP / 4.0 kW	10 HP / 5.5 kW	10 HP / 7.5 kW
RGC3..30	2 HP / 1.5 kW	5 HP / 3.0 kW	10 HP / 5.5 kW	10 HP / 7.5 kW	15 HP / 11.0 kW
RGC3..40	2 HP / 1.5 kW	5 HP / 4.0 kW	10 HP / 7.5 kW	10 HP / 9.0 kW	15 HP / 11.0 kW
RGC3..48	3 HP / 3.0 kW	10 HP / 5.5 kW	15 HP / 11.0 kW	20 HP / 15.0 kW	25 HP / 20.0 kW
RGC3..65	3 HP / 3.0 kW	10 HP / 5.5 kW	15 HP / 11.0 kW	20 HP / 15.0 kW	25 HP / 20.0 kW

Inputs

	RG..D..	RG..A..	RG..D..D.. RG..D..A..	RG..A..A..
Control voltage range, UC (A1, A2)	5 - 32 VDC	20-275 VAC, 24 (-10%) -190 VDC	5 - 32 VDC	20-275 VAC
Pick-up voltage	4.8 VDC	20 VAC/DC	4.8 VDC	20 VAC
Drop-out voltage	1.0 VDC	5 VAC/DC	1.0 VDC	5 VAC
Maximum reverse voltage	32 VDC	-	32 VDC	-
Maximum response time	0.5 cycle + 500 µs @ 24 VDC	2 cycles @ 230 VAC/110 VDC	1 cycle + 500 µs @ 24 VDC	5 cycles @ 230 VAC
Input current @ 40°C	See diagrams below			

Input current vs input voltage

RG..D

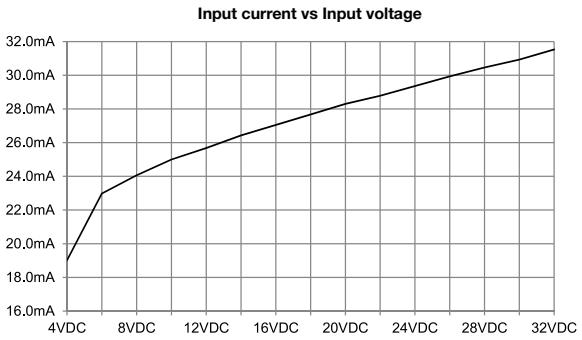

RG..A

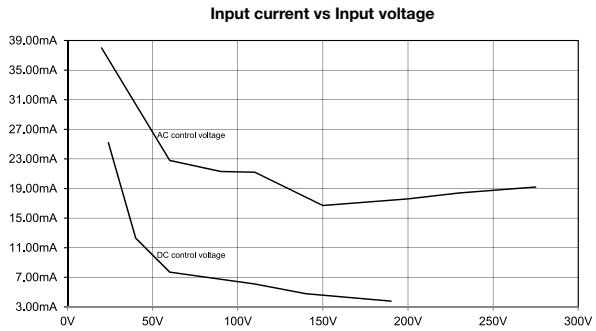

RG..D..D.., RG..D..A..

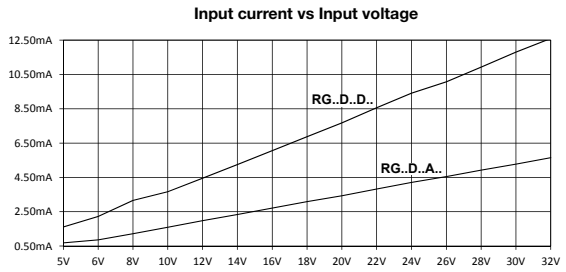

RG..A..A..

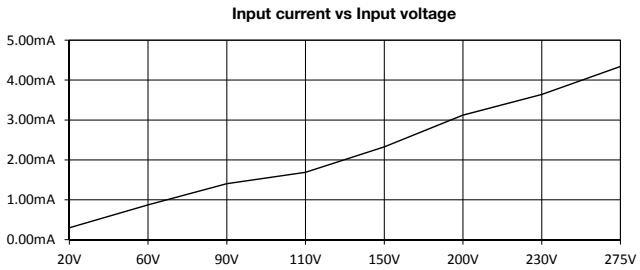

Power supply specifications (Us)

	RG..D..D..	RG..D..A.. RG..A..A..
Supply voltage range, Us	24 VDC, -15% / +20%	90-250 VAC
Reverse polarity protection	Yes	n/a
Max. supply current **no fan, RG..M** **with fan, RG..F, RG..FM**	80 mA 150 mA	60 mA 80 mA
Surge protection[3]	500 V PC1 with integrated transil	L-L 1 kV, L-E 2 kV PC1[3, 4]

3. Refer to Electromagnetic Compatability section for further details
4. When supplied from secondary circuit with short circuit limit of 1500 VA

Alarm output specifications (12, 14, 11)

	RG..F RG..M
Function	Operates in case of an alarm condition on the RG..F or the RG..M
Output type	EMR, 1 Form C (SPDT) Normally closed (12-11) Normally open (14-11) 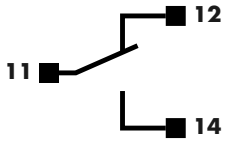
Contact rating	2A @ 250 VAC / 30 VDC
Isolation	1000 VAC

Auxiliary output specifications (22, 24, 21)

	RG..D..D.. RG..D..A..	RG..A..A..
Output type	PNP darlington, Normally closed (22-21) NPN darlington, Normally open (24-21)	Triac, Normally closed (22-21) Triac, Normally open (24-21)
Rated voltage	24 VDC +/-20%	90-250 VAC
On-state voltage drop, typical	4 VDC	< 2 VAC
Blocking voltage	-	800 Vp
Maximum current rating	50 mADC	1 AAC @ 25°C[5]
Delay from SSR output switching to auxiliary output	5 cycles	5 cycles

5. Refer to Derating Curve for Auxliary Output rating @ higher operating temperature

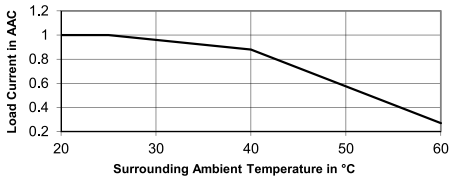

Output power dissipation

RGC2

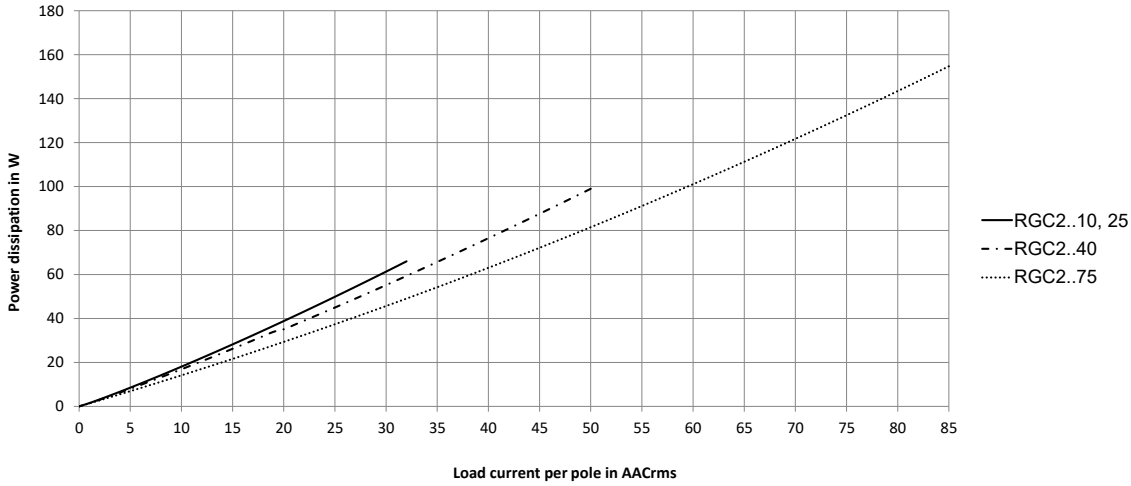

RGC3

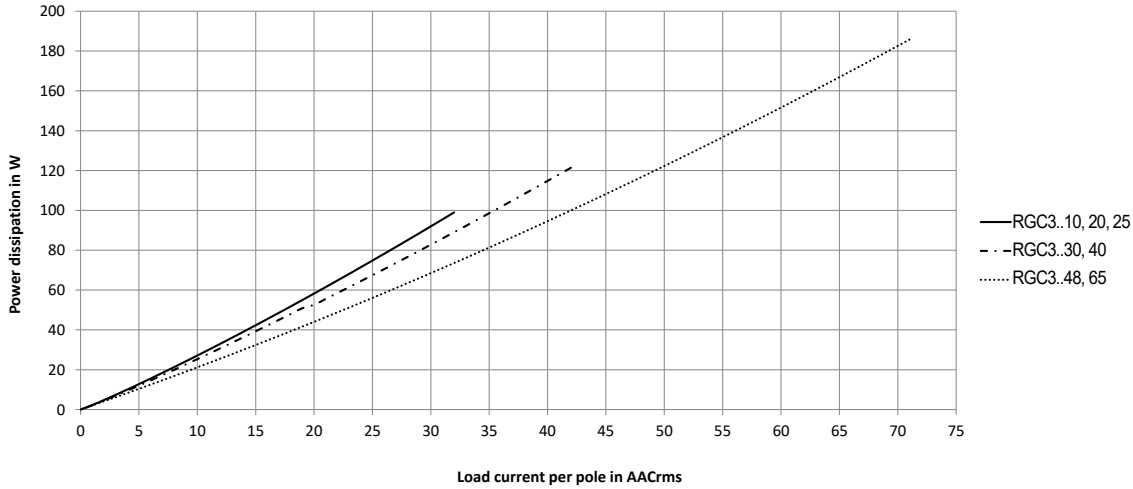

Current derating

RGC2

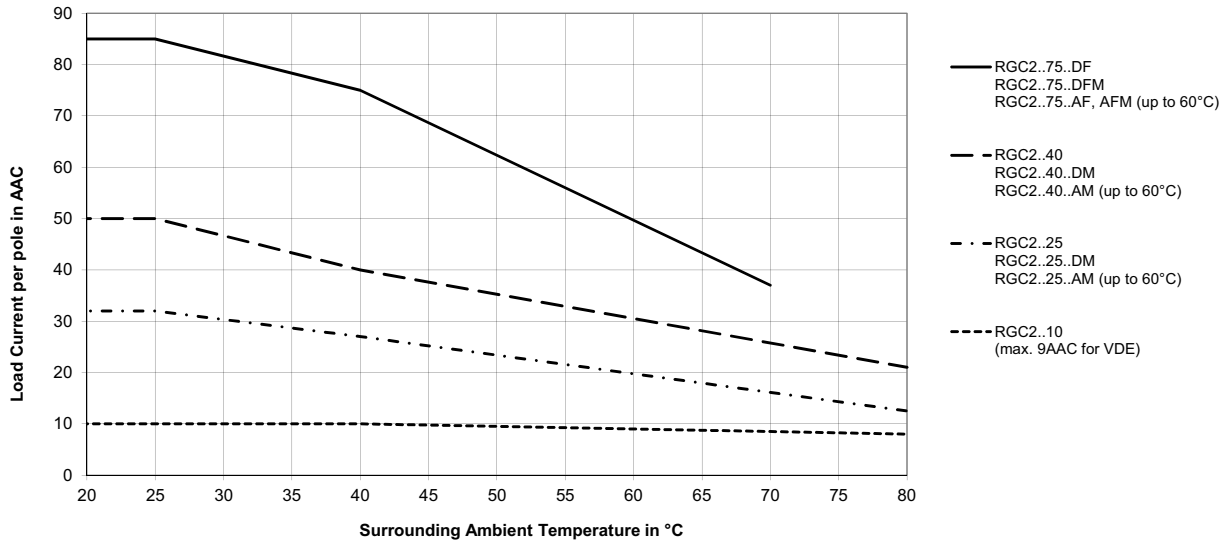

RGC3

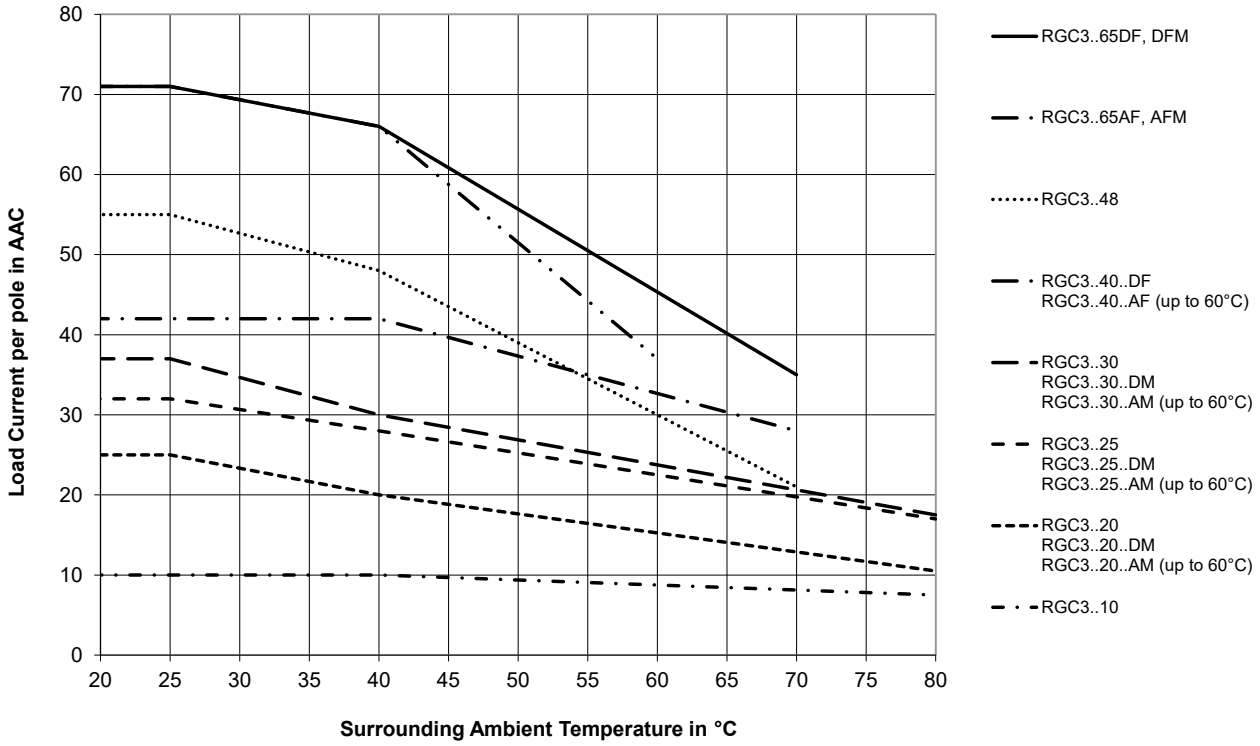

Derating vs. Spacing Curves

RGC2..10

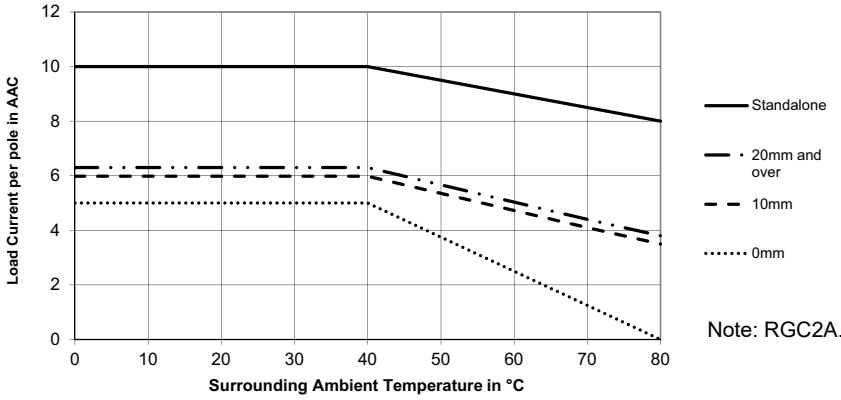

Note: RGC2A..AM up to 60°C

RGC2..25

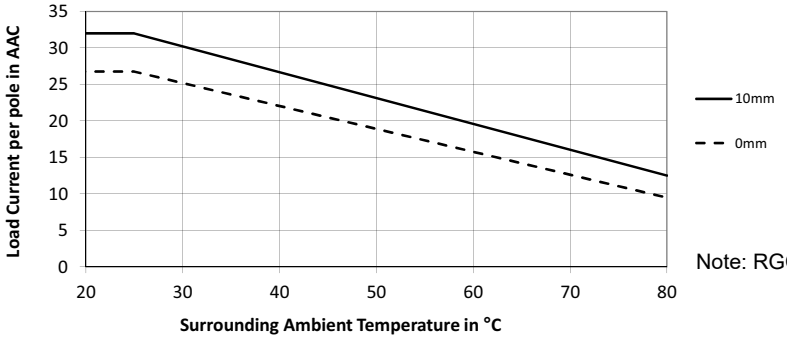

Note: RGC2A..AM up to 60°C

RGC2..40

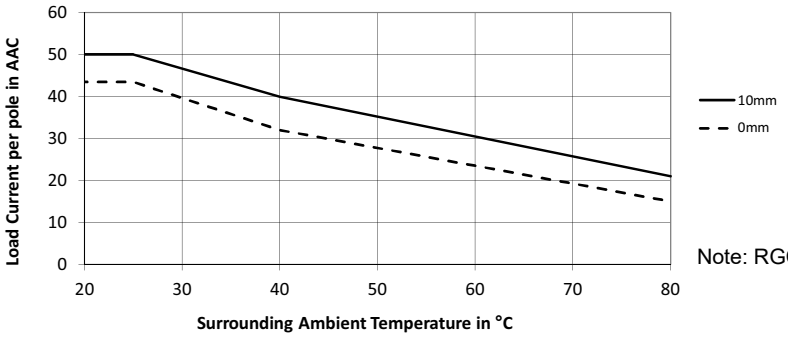

Note: RGC2A..AM up to 60°C

RGC2..75

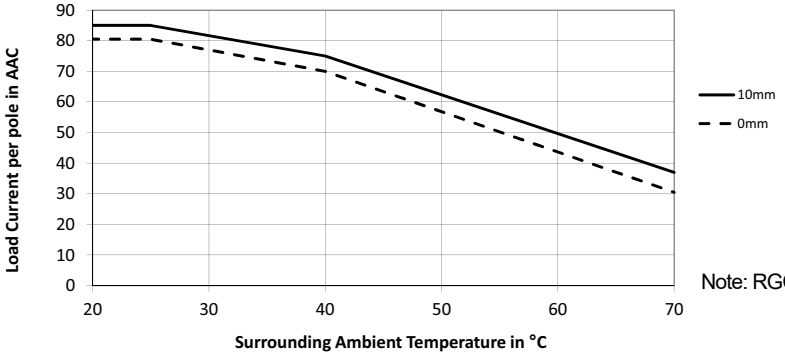

Note: RGC2A..AF, AFM up to 60°C

Derating vs. Spacing Curves

RGC3..10

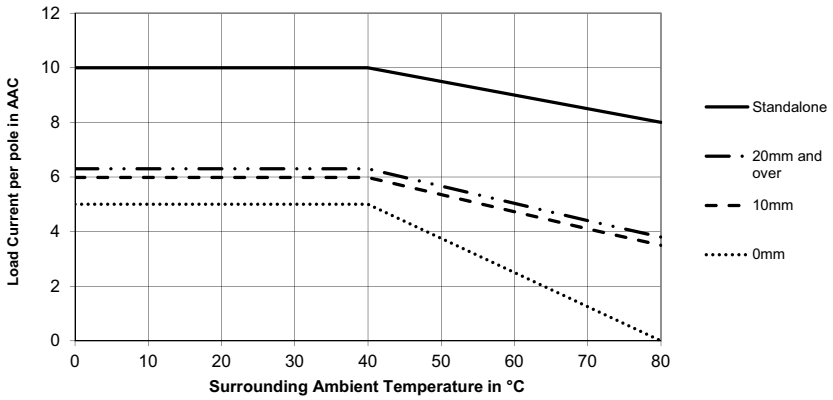

RGC3..20

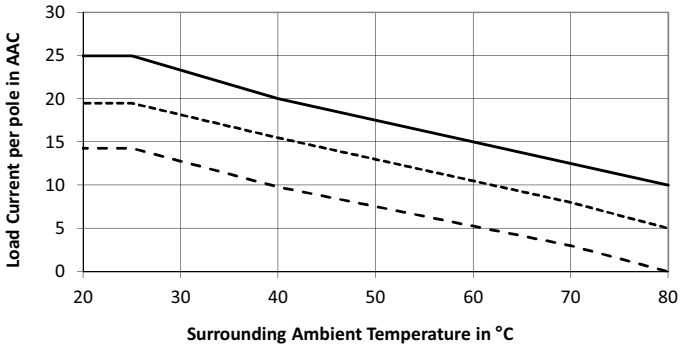

Note: RGC3A..AM up to 60°C

RGC3..25

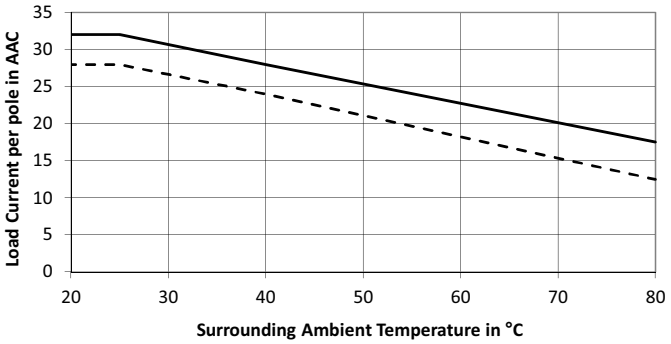

Note: RGC3A..AM up to 60°C

RGC3..30

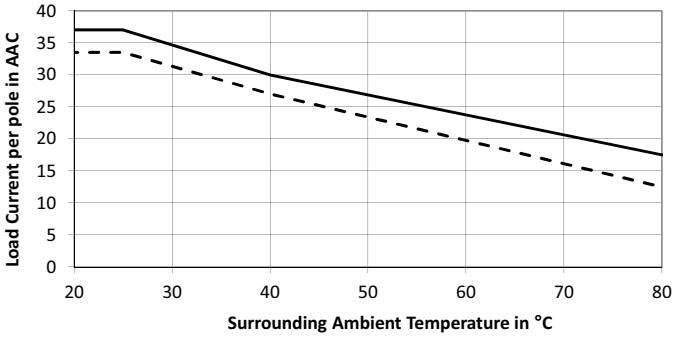

Note: RGC3A..AM up to 60°C

Derating vs. Spacing Curves

RGC3..40

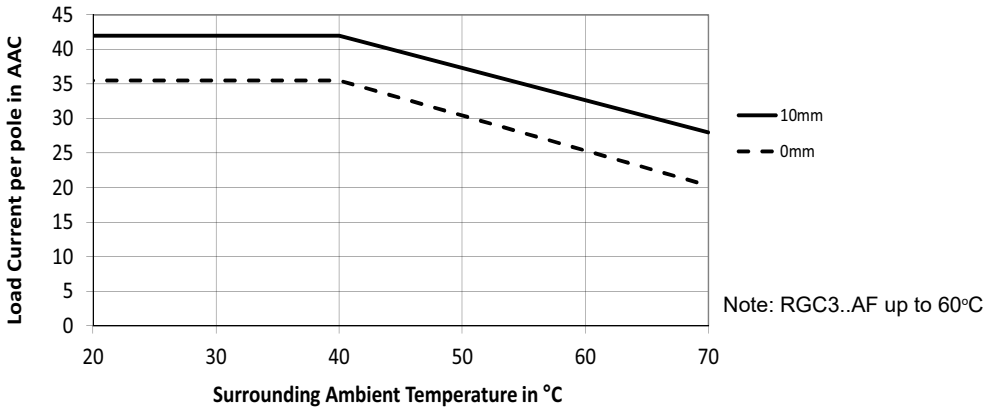

RGC3..65DF, DFM

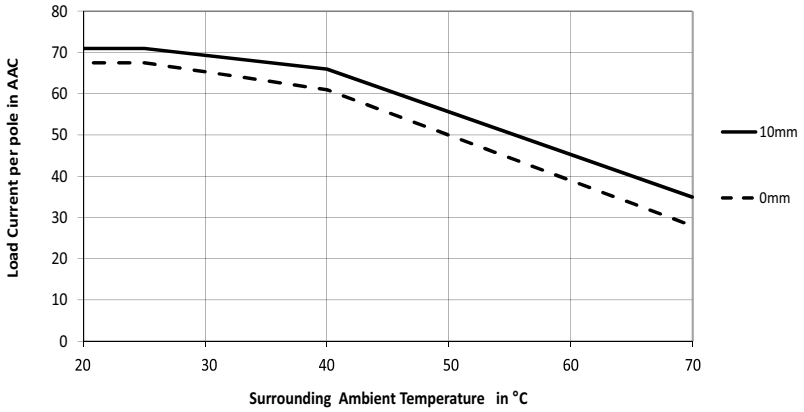

RGC3..65AF, AFM

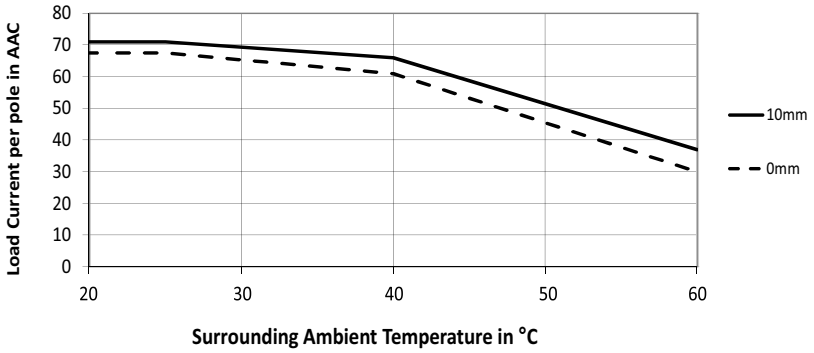

Compatibility and conformance

Approvals	CE, cULus LISTED, DVE[6, 7], EAC, CCCS[6]
Standards compliance	LVD: EN 60947-4-3 EMCD: EN 61000-6-2, EN 61000-6-4 UL: UL508, E172877 cUL: C22.2 No. 14-13, E172877 CCC, GB/T 14048.5-2017 (IEC 60947-5-1) VDE 0660-117 (DIN EN 60947-4-2), VDE 0700-1 (DIN EN 60335-1)[7]
UL short circuit current rating	100k Arms (refer to short circuit current section, Type 1 – UL508)

6. Not applicable for RGC...48
7. Applicable only to RGC...10

Electromagnetic compatibility (EMC) - Immunity	
Electrostatic discharge (ESD)	EN/IEC 61000-4-2 8 kV air discharge, 4 kV contact (PC2)
Radiated radio frequency	EN/IEC 61000-4-3 10 V/m, from 80 MHz to 1 GHz (PC1) 10 V/m, from 1.4 to 2 GHz (PC1) 10 V/m, from 2 to 2.7 GHz (PC1)
Electrical fast transient (burst) **RGC..M**	EN/IEC 61000-4-4 Output: 2 kV, 5 kHz (PC1) Input: 1 kV, 5 kHz (PC1) Signal: 1 kV, 5 kHz (PC1)
Conducted radio frequency	EN/IEC 61000-4-6 10 V/m, from 0.15 to 80 MHz (PC1)
Electrical surge **RGC..D..D** **RGC..D..A, RGC..A..A** **RGC..D..D** **RGC..D..A, RGC..A..A**	EN/IEC 61000-4-5 Output, line to line: 1 kV (PC2) Output, line to earth: 2 kV (PC2) Input, line to line: 500 V (PC2) Input, line to earth: 500 V (PC2) Signal, line to line, 500 V (Us, 21, 22, 24) (PC1) Signal, line to line, 1 kV (Us, 21, 22, 24) (PC1) Signal, line to earth, 500 V (Us, 21, 22, 24) (PC1) Signal, line to earth, 1 kV (Us, 21, 22, 24) (PC1) 11, 12, 14, line to line, 1 kV (PC1) 11, 12, 14, line to earth, 2 kV (PC1)
Voltage dips	EN/IEC 61000-4-11 0% for 0.5, 1 cycle (PC2) 40% for 10 cycles (PC2) 70% for 25 cycles (PC2) 80% for 250 cycles (PC2)
Voltage interruptions	EN/IEC 61000-4-11 0% for 5000 ms (PC2)

Electromagnetic compatibility (EMC) - Emissions	
Radio interference field emission (radiated)	EN/IEC 55011 Class A: from 30 to 1000 MHz
Radio interference voltage emissions (conducted)	EN/IEC 55011 Class A: from 0.15 to 30 MHz (External filter may be required - refer to Filtering section)

Filter connection diagram

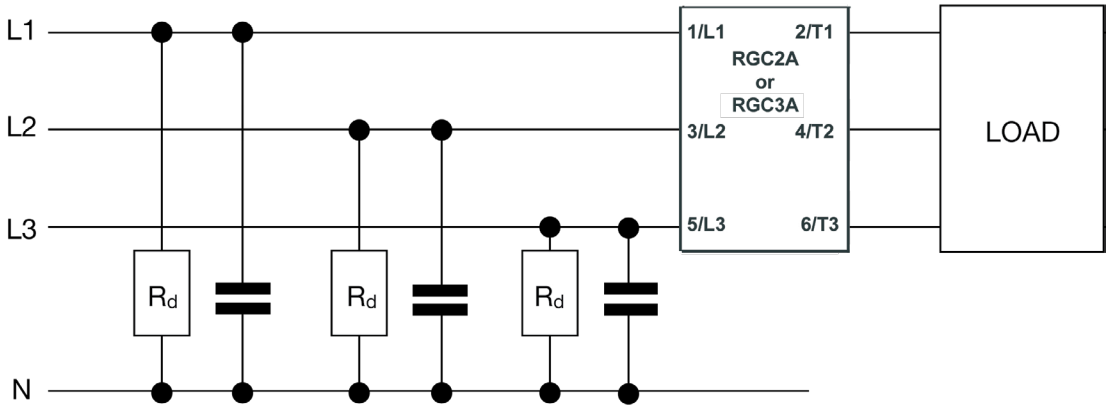

Filtering

Part number	Suggested filter for EN 55011 Class A compliance	Maximum heater current [AAC]
RGC2A60..10	220 nF / 760 V / X1	10 AAC
RGC2A22..25	220 nF / 275 V / X1	25 AAC
RGC2A60..25	220 nF / 760 V / X1	25 AAC
RGC2A60..40	330 nF / 760 V / X1	40 AAC
RGC2A60..75	470 nF / 760 V / X1	65 AAC
RGC3A22..10	220 nF / 275 V / X1	10 AAC
RGC3A60..10	220 nF / 760 V / X1	10 AAC
RGC3A22..20	220 nF / 275 V / X1	25 AAC
RGC3A60..20	220 nF / 760 V / X1	25 AAC
RGC3A60..25	330 nF / 760 V / X1	25 AAC
RGC3A60..30	470 nF / 760 V / X1	30 AAC
RGC3A60..40	470 nF / 760 V / X1	40 AAC
RGC3A60..48	470 nF / 760 V / X1	48 AAC
RGC3A60..65	470 nF / 760 V / X1	65 AAC

Note:

- Control input lines must be installed together to maintain products' susceptability to Radio Frequency interference.
- Use of AC solid state relays may, according to the application and the load current, cause conducted radio interferences. Use of mains filters may be necessary for cases where the user must meet E.M.C requirements. The capacitor values given inside the filtering specification tables should be taken only as indications, the filter attenuation will depend on the final application.
- This product has been designed for Class A equipment. Use of this product in domestic environments may cause radio interference, in which case the user may be required to employ additional mitigation methods.
- Surge tests on RGC..A, RGC..A..A.. models were carried out with the signal line impedence network. In case the line impedance is less than 40Ω, it is suggested that AC supply is provided through a secondary circuit where the short circuit limit between conductors or between conductors and ground is 1500 VA or less.

* For conformance to EN/IEC 61000-6-4, an external capacitor class X1, 220 nF, 275 VAC is to be connected across the input control lines A1-A2 for AC control versions.

** With external varistor 275 V (S05K275) Type 2 connected between terminals 22 - 21 or terminals 24 - 21.

- Performance Criteria 1 (PC1): No degradation of performance or loss of function is allowed when the product is operated as intended.
- Performance Criteria 2 (PC2): During the test, degradation of performance or partial loss of function is allowed. However when the test is complete the product should return operating as intended by itself.
- Performance Criteria 3 (PC3): Temporary loss of function is allowed, provided the function can be restored by manual operation of the controls.

Additional conformance to railway standards

Applicable to variants	RGC..D.. (not applicable for RGC..M)
Additional conformance specific to railway applications	EN 50155 EN 45545-2 EN 50121-3-2
Hazardous level conformance according to EN 45545-2	HL1, HL2 for requirement R23 HL1 for requirement R22
Operating temperature class according to EN 50155	OT3 (-25 °C to +70 °C)
Vibration and shock	EN 61373 Category 1, Class B
Additional EMC conformance	accoding to EN 50121-3-2
Radiated radio frequency immunity	EN/IEC 61000-4-3 20 V/m, from 80 MHz to 1 GHz (PC1) 10 V/m, from 1.4 to 2 GHz (PC1) 5 V/m, from 2 to 2.7 GHz (PC1) 3V/m, 5.1 - 6 GHz (PC1)
Power quality measurement	EN/IEC 61000-4-30 50 Hz - 2 kHz, <8% THD (PASS)

Environmental specifications

Operating temperature **RGC...DF, DFM** **RGC...AM, AF, AFM**	-40°C to +80°C (-40°F to +176°F) -40°C to +70°C (-40°F to +158°F) -40°C to +60°C (-40°F to +140°F)
Storage temperature	-40 to +100 °C (-40 to +212 °F)
Relative humidity	95% non-condensing @ 40°C
Pollution degree	2
Installation altitude	0-1000 m. Above 1000 m derate linearly by 1% of FLC per 100 m up to a maximum of 2000 m
Vibration resistance	2g / axis (2-100Hz, IEC 60068-2-6, EN 50155, EN 61373)
Impact resistance	15/11 g/ms (EN50155, EN61373)
EU RoHS compliant	Yes
China RoHS	25

The declaration in this section is prepared in compliance with People's Republic of China Electronic Industry Standard SJ/T11364-2014: Marking for the Restricted Use of Hazardous Substances in Electronic and Electrical Products.

Part Name	**Toxic or Harardous Substances and Elements**					
	Lead (Pb)	Mercury (Hg)	Cadmium (Cd)	Hexavalent Chromium (Cr(VI))	Polybrominated biphenyls (PBB)	Polybrominated diphenyl ethers (PBDE)
Power Unit Assembly	x	O	O	O	O	O

O: Indicates that said hazardous substance contained in homogeneous materials fot this part are below the limit requirement of GB/T 26572.

X: Indicates that said hazardous substance contained in one of the homogeneous materials used for this part is above the limit requirement of GB/T 26572.

这份申明根据中华人民共和国电子工业标准
SJ/T11364-2014：标注在电子电气产品中限定使用的有害物质

零件名称	有毒或有害物质与元素					
	铅 (Pb)	汞 (Hg)	镉 (Cd)	六价铬 (Cr(VI))	多溴化联苯 (PBB)	多溴联苯醚 (PBDE)
功率单元	x	O	O	O	O	O

O:此零件所有材料中含有的该有害物低于GB/T 26572的限定。

X: 此零件某种材料中含有的该有害物高于GB/T 26572的限定。

Short circuit protection

Protection Co-ordination, Type 1 vs Type 2:

Type 1 protection implies that after a short circuit, the device under test will no longer be in a functioning state. In Type 2 co-ordination the device under test will still be functional after the short circuit. In both cases, however the short circuit has to be interrupted. The fuse between enclosure and supply shall not open. The door or cover of the enclosure shall not be blown open. There shall be no damage to conductors or terminals and the conductors shall not separate from terminals. there shall be no breakage or cracking of insulating bases to the extent that the integrity of the mounting of live parts is impaired. Discharge of parts or any risk of fire shall not occur.

The product variants listed in the table hereunder are suitable for use on a circuit capable of delivering not more than 100,000 Arms Symmetrical Amperes, 600 Volts maximum when protected by fuses. Tests at 100,000 A were performed with Class J fuses, fast acting; please refer to the table below for maximum allowed ampere rating of the fuse. Use fuses only.

Tests with Class J fuses are representative of Class CC fuses.

Protection co-ordination Type 1 according to UL 508				
Part No.	**Prospective short circuit current [kArms]**	**Max fuse size [A]**	**Class**	**Voltage [VAC]**
RGC2..10, RGC2..25, RGC3..10, RGC3..20, RGC3..25	100	30	J or CC	Max. 600
RGC2..40, RGC3..30, RGC3..40		40	J	
RGC2..75, RGC3..48, RGC3..65		60[8]	J	

8. Consult a Carlo Gavazzi sales representative for use of 70 A class J fuses

Protection co-ordination Type 2 for motor load applications						
Part No.	**Prospective short circuit current [kArms]**	**Ferraz Shawmut (Mersen)**		**Siba**		**Voltage [VAC]**
		Max fuse size [A]	**Part number**	**Max fuse size [A]**	**Part number**	
RGC2..10	100	40	A70QS40-4	32	50 142 06 32	600
RGC2..25		40	A70QS40-4	32	50 142 06 32	
RGC2..40		60	A70QS60-4	63	50 194 20 63	
RGC2..75		100	A70QS100-4	125	50 196 20 125	
RGC3..10		40	A70QS40-4	32	50 142 06 32	
RGC3..20		40	A70QS40-4	32	50 142 06 32	
RGC3..25		40	A70QS40-4	32	50 142 06 32	
RGC3..30		40	A70QS40-4	40	50 194 20 40	
RGC3..40		50	A70QS50-4	50	50 194 20 50	
RGC3..48		70	A70QS70-4	63	50 194 20 63	
RGC3..65		100	A70QS100-4	125	50 196 20 125	

Protection co-ordination Type 2 for heater load applications						
Part No.	Prospective short circuit current [kArms]	Ferraz Shawmut (Mersen)		Siba		Voltage [VAC]
		Max fuse size [A]	Part number	Max fuse size [A]	Part number	
RGC2..10 RGC2..25	10	40	660 URC 14x51/40	32	50 142 06 32	600
		40	6.9xx gRC URD 22x58/40			
	100	40	660 URD 22x58/40			
		40	A70QS40-4			
RGC2..40	10	63	6.9xx gRC URC 14x51/63	63	50 194 20 63	600
	100	63	6.9xx gRC URD 22x58/63			
		60	A70QS60-4			
RGC2..75	10	100	6.9xx gRC URD 22x58/100	125	50 196 20 125	600
	100	100	660 URQ 27x60/100			
		100	A70QS100-4			
RGC3..10 RGC3..20	10	32	6.9xx gRC URC 14x51/32	32	50 142 06 32	600
	100	32	6.9xx gRC URC 14x51/32			
		40	A70QS40-4			
RGC3..25	10	40	660 URC 14x51/40	32	50 142 06 32	600
		40	6.9xx gRC URD 22x58/40			
	100	40	660 URD 22x58/40			
		40	A70QS40-4			
RGC3..30	10	40	6.9xx gRC URC 14x51/40	40	50 194 20 40	600
	100	40	6.9xx gRC URC 14x51/40			
		40	A70QS40-4			
RGC3..40	10	63	6.9xx gRC URC 14x51/63	50	50 194 20 50	600
	100	63	6.9xx gRC URC 22x58/63			
		50	A70QS50-4			
RGC3..48	10	63	6.9xx gRC URC 14x51/63	63	50 194 20 63	600
	100	63	6.9xx CP GRC 22x58/63			
		70	A70QS70-4			
RGC3..65	10	100	6.9xx gRC URC 22x58/100	125	50 196 20 125	600
	100	90	660 URD 22x58/90			
		100	A70QS100-4			

Protection co-ordination Type 2 with Minature Circuit Breakers (M.C.B.s)				
Solid State Relay type	**ABB Model no. for Z - type M. C. B. (rated current)**	**ABB Model no. for B - type M. C. B. (rated current)**	**Wire cross sectional area [mm²]**	**Minimum length of Cu wire conductor [m][9]**
RGC2..10 RGC2..25 RGC3..10 RGC3..20 RGC3..25 (1800 A²s)	S203 - Z10 (10 A)	S203 - B4 (4 A)	1.0 1.5 2.5	7.6 11.4 19.0
	S203 - Z16 (16 A)	S203 - B6 (6 A)	1.0 1.5 2.5 4.0	5.2 7.8 13.0 20.8
	S203 - Z20 (20 A)	S203 - B10 (10A)	1.5 2.5	12.6 21.0
	S203 - Z25 (25 A)	S203 - B13 (13 A)	2.5 4.0	25.0 40.0
RGC2..40 RGC3..30 RGC3..40 (6600 A²s)	S203 - Z20 (20 A)	S203 - B10 (10 A)	1.5 2.5 4.0	4.2 7.0 11.2
	S203 - Z32 (32 A)	S203 - B16 (16 A)	2.5 4.0 6.0	13 20.8 31.2
RGC2..75 RGC3..48 RGC3..65 (15000 A²s)	S203 - Z25 (25 A)	S203 - B16 (16 A)	2.5 4.0 6.0	3.1 5.0 7.5
	S203 - Z50 (50 A)	S203 - B25 (25 A)	4.0 6.0 10.0 16.0	8.0 12.0 20.0 32.0
	S203 - Z63 (63 A)	S203 - B32 (32 A)	6.0 10.0 16.0	11.3 18.8 30.0

9. Between MCB and Load (including return path which goes back to the mains)

Note: A prospective current of 6 kA and a 230 / 400 V power supply is assumed for the above suggested specifications. For cables with different cross section than those mentioned above please consult Carlo Gavazzi's Technical Support Group.

Fan operation for versions with integrated fan

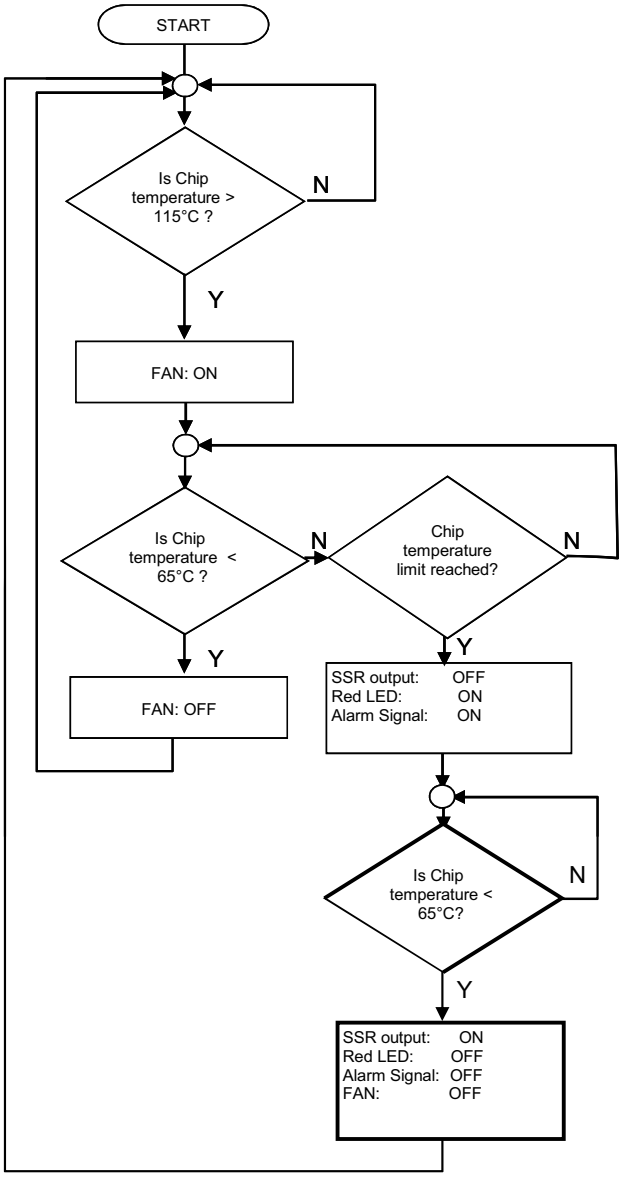

RGC..M Mode of Operation

The RGC..M versions are suitable only for use with resistive loads.

The ‘M’ suffix versions integrate monitoring circuitry that can detect the status of the Mains, Load, and Solid State Relay (SSR) status. The fault conditions that can be detected with the RGC..M include:
- Mains loss
- Load loss
- SSR open circuit
- SSR short circuit
- SSR over temperature

An external supply, 24 VDC or 90-250 VAC, selectable through part no. configuration, is required for the operation of the RGC..M models. In the case of a fault condition, an EMR alarm output is available through terminals 11, 12, 14 for remote indication. Alarm visual indication is provided by a flashing red LED. The flash rate of the red LED gives an indication of the type of alarm condition detected.

The RGC..M is also equipped with an auxiliary output which operates in synchronisation with the output of the SSR. This electronic auxiliary output with normally open or normally closed user selectable contacts is available through terminals 21, 22, 24. A yellow LED gives indication of the SSR output status.

Mains Loss:

The mains loss alarm is issued if the mains voltage is missing from either terminals L1, L2 or L3 for more than 1 second. This alarm type is indicated by 2 flashes of the red LED. The alarm resets automatically once the mains voltage is restored and is present on terminals L1, L2 and/or L3 for more than 1 second. In case of mains frequency outside the specified limits, the mains loss alarm is activated. The SSR output is not affected in this condition; this means that if control is ON, the SSR output remains ON.

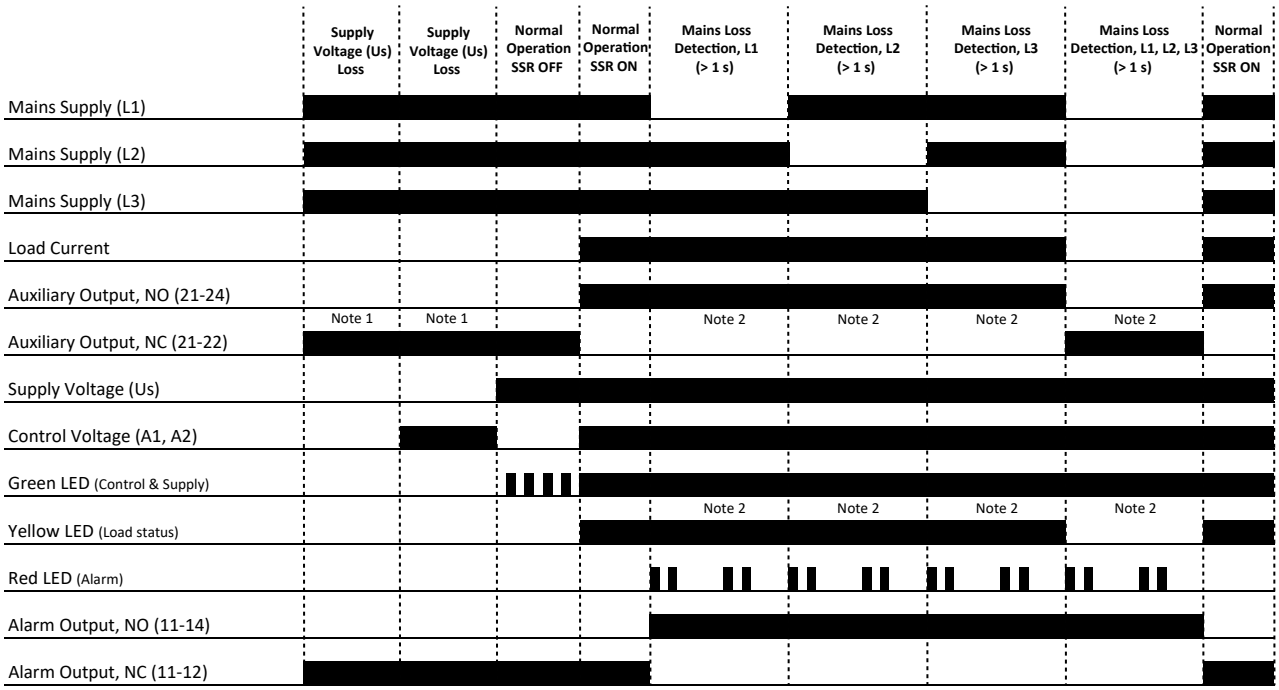

Note 1: For the AC external supply versions (RGC..A..A), the Auxiliary output, NC (21-22) will be closed only when the external supply Us is present.

Note 2: Yellow LED and hence load current is OFF only if all phases L1, L2 and L3 are missing. If any 2 phases are present and control voltage is applied, the yellow LED and auxiliary output will be ON.

RGC..M Mode of Operation (continued)

Load Loss:

Detection of load loss is possible only with control ON. This alarm is issued in the absence of a load termination or an open load on terminals T1, T2 and/or T3 for more than 120ms. When the load loss alarm is triggered, the SSR output is not turned OFF as long as control voltage is present on the RGC..M. The fault condition is automatically restored once the fault is cleared.

The RGC..M permits a total combined load and supply unbalance of 40%, where individually load unbalance shall not exceed 40% and supply unbalance shall not exceed 15%. If these limits are exceeded erratic behaviour and false alarms may be expected.

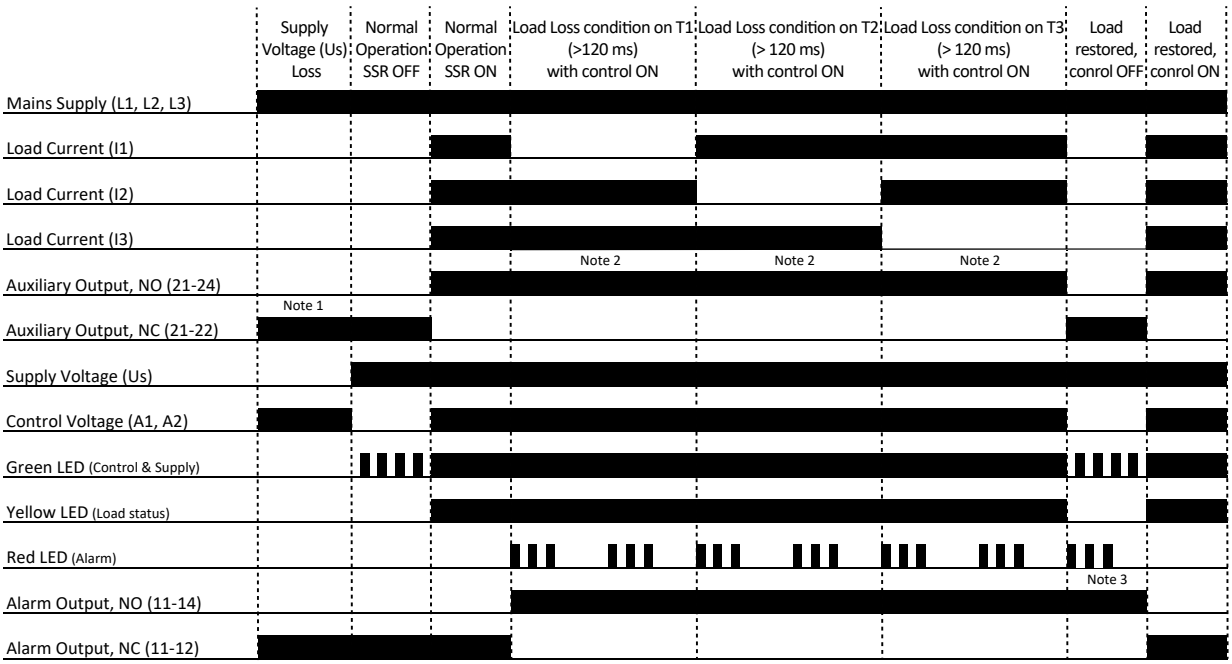

Note 1: For the AC external supply versions (RGC..A..A), the Auxiliary output, NC (21-22) will be closed only when the external supply Us is present.

Note 2: Yellow LED and Auxiliary output is OFF if all the loads connected to the 3 poles T1, T2 and T3 are missing.

Note 3: The Load loss alarm will reset only with control ON.

RGC..M Mode of Operation (continued)

SSR Short Circuit:

This condition is detected when the SSR output remains ON for more than 250 ms without control voltage. Upon this alarm, an attempt is made to switch OFF the SSR output but this may not be possible in case of a damaged SSR output(s). Alarm indication is given by 3 flashes of the red LED (same as the load loss alarm indication). In case of a self recovery, the SSR will automatically reset.

During an SSR short circuit condition, the SSR output is ON unintentionally. In this case the auxiliary output does not work in synchronisation with the SSR output.

Note 1: For the AC external supply versions (RGC..A..A), the Auxiliary output, NC (21-22) will be closed only when the external supply Us is present.

RGC..M Mode of Operation (continued)

SSR Open Circuit:

This alarm is issued when either one of the poles or all 3 poles do not switch ON within 250 ms when control voltage is applied. This alarm type is identified by 4 flashes of the red LED. In the case of an open circuit on only 1 pole the load will switch on 2 phases. The alarm output remains active (with control ON) until the alarm condition is removed.

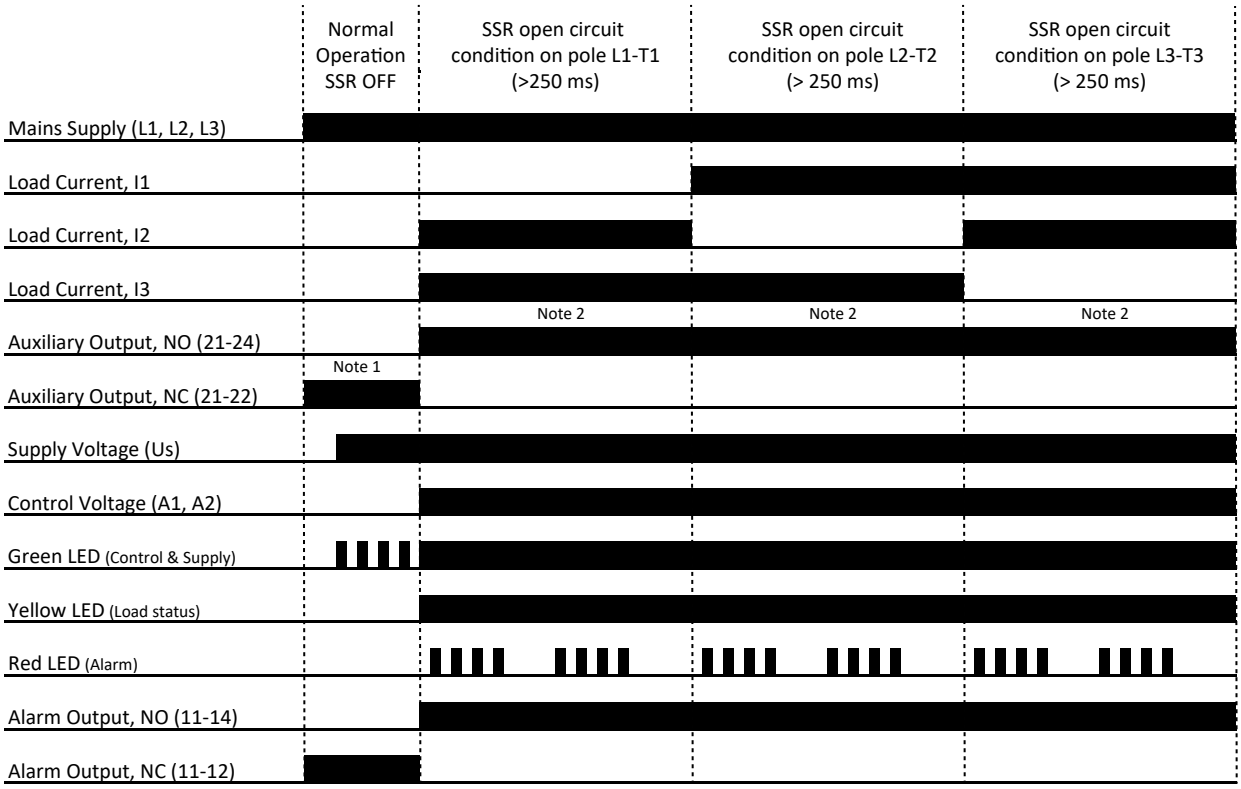

Note 1: For the AC external supply versions (RGC..A..A), the Auxiliary output, NC (21-22) will be closed only when the external supply Us is present.

Note 2: Yellow LED and Auxiliary output is OFF if all the loads connected to the 3 poles T1, T2 and T3 are missing.

RGC..M Mode of Operation (continued)

SSR Over Temperature:

The SSR is equipped with internal temperature monitoring to prevent SSR damage in case of overheating conditions. Upon detection of such a condition the SSR output is switched OFF and an alarm is issued accordingly. This alarm is visually indicated by the red LED which is fully ON. Once the temperature cools down, the alarm is cleared and if control is still ON an attempt to re-start the SSR is made.

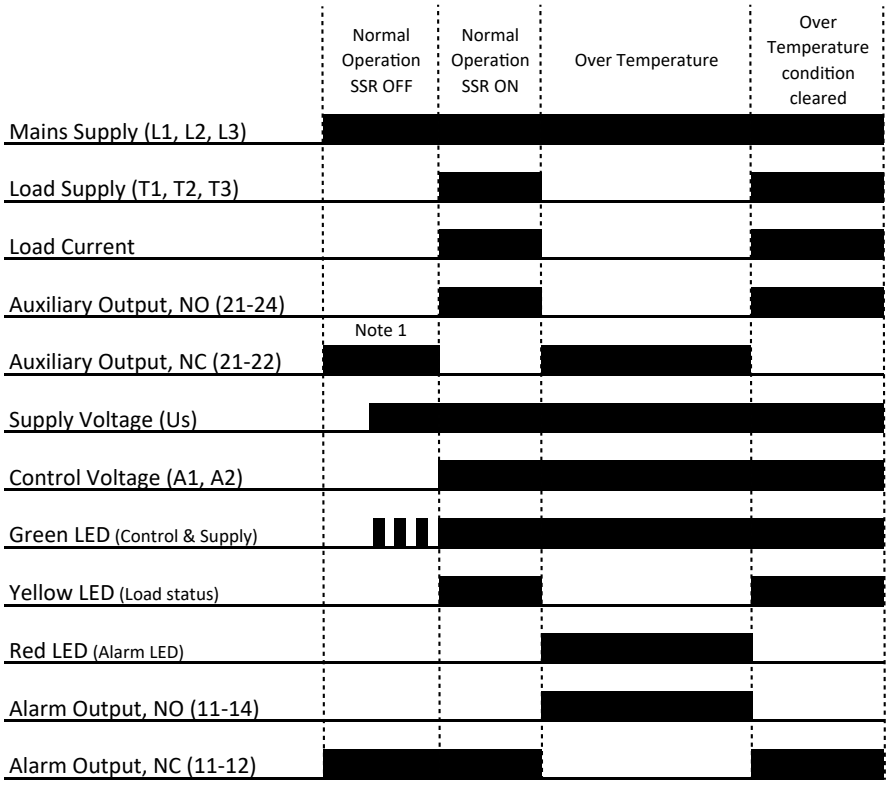

Note 1: For the AC external supply versions (RGC..A..A), the Auxiliary output, NC (21-22) will be closed only when the external supply Us is present.

LED indicators

		RGC	RGC..F	RGC..M
CONTROL	Green	Full intensity: Control ON OFF: Control OFF	Full intensity: Supply ON, Control ON Flashing: 0.5 s ON, 0.5 s OFF Supply ON, Control OFF	Full intensity: Supply ON, Control ON Flashing: 0.5 s ON, 0.5 s OFF Supply ON, Control OFF
LOAD	Yellow	-	-	Full intensity: Load ON
ALARM	Red	-	Full intensity: SSR over temperature alarm	Full intensity or Flashing: Alarm condition present. Refer to Alarm Management section.

Alarm management

Flashes	Description of Fault	Timing Diagram
2	Mains loss	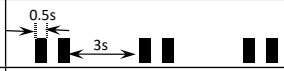
3	Load loss or SSR short circuit	
4	SSR open circuit	
100%	SSR over temperature	

Dimensions

RGC2..10KKE, RGC3..10KKE

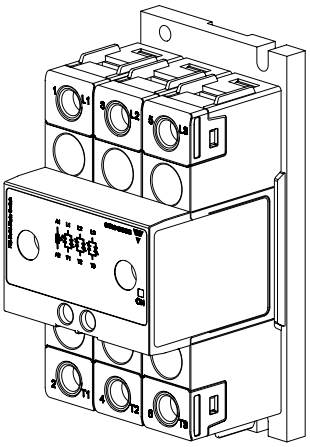

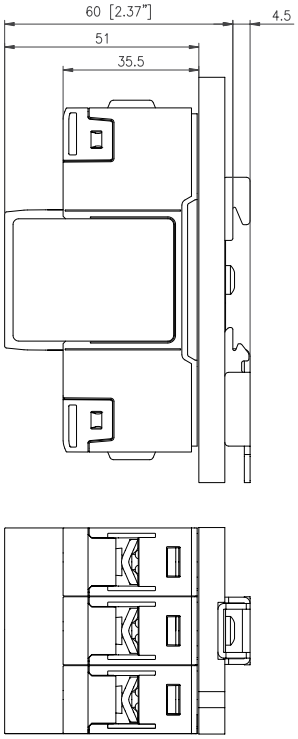

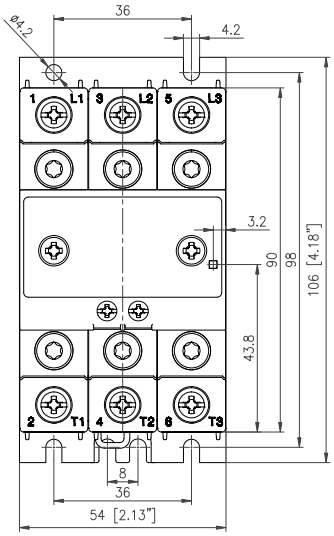

RGC2..25KKE, RGC3..20KKE

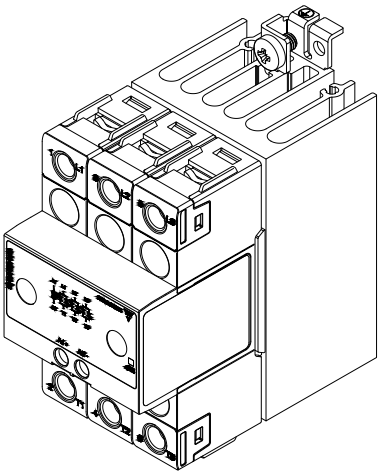

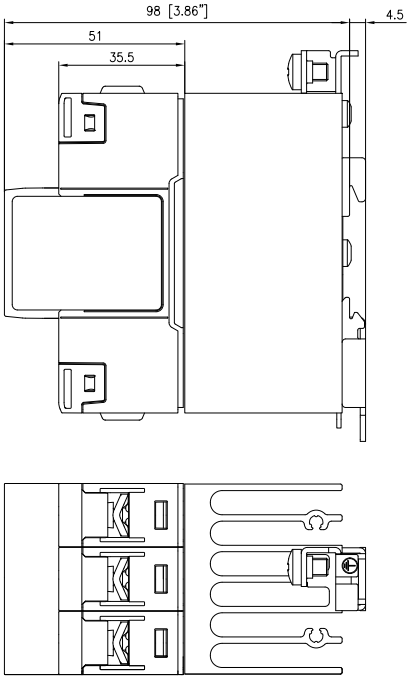

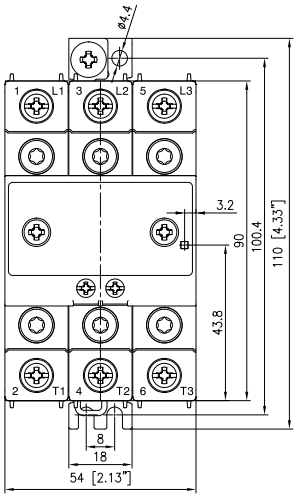

Housing width tolerance +0.5mm, -0mm as per DIN 43880.
All other tolerances +/- 0.5mm.
Dimensions in mm.

Dimensions

RGC2..25GKE.M, RGC3..20GKE.M

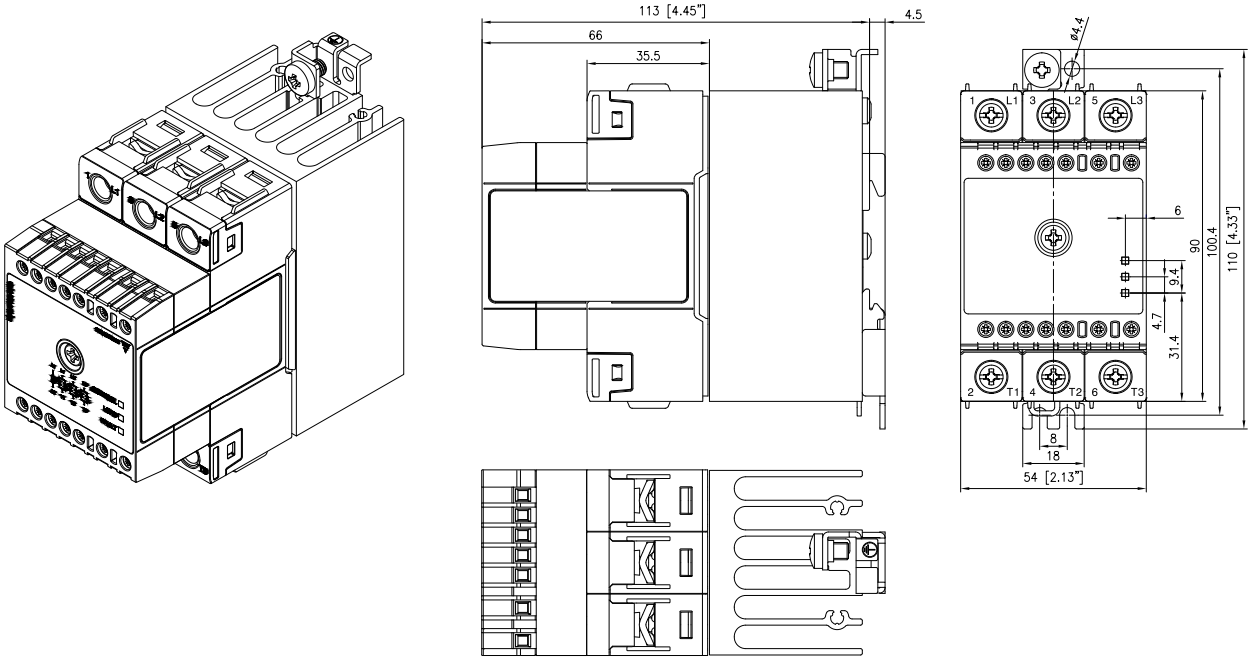

RGC3..25KKE

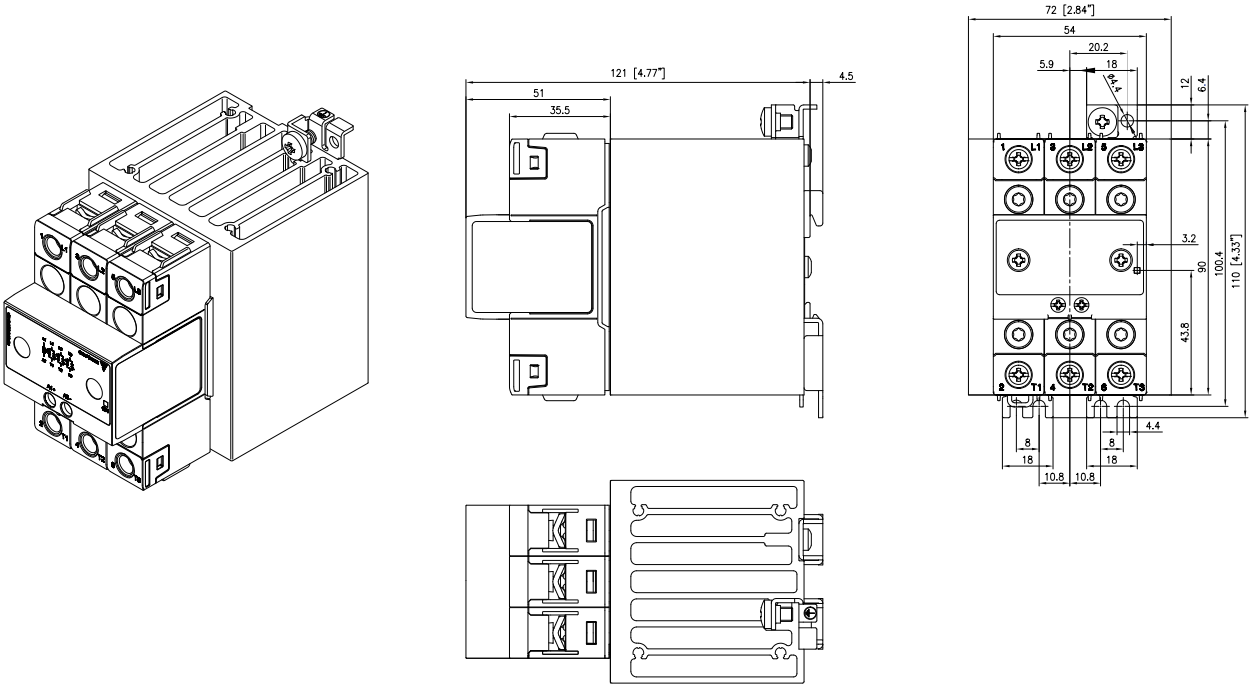

Housing width tolerance +0.5mm, -0mm as per DIN 43880.
All other tolerances +/- 0.5mm.
Dimensions in mm.

Dimensions

RGC3..25GKE.M

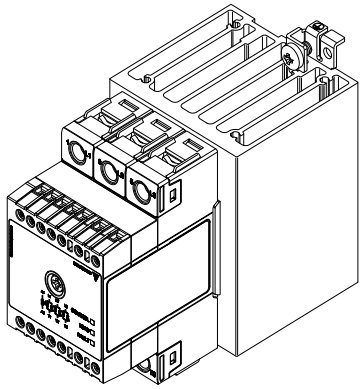

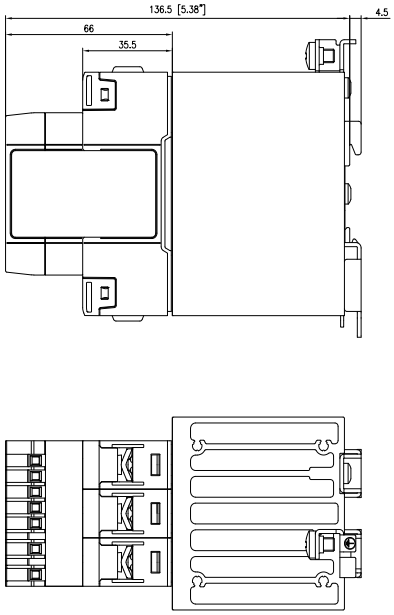

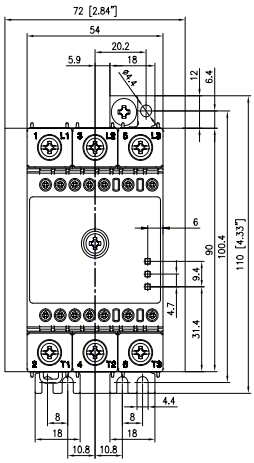

RGC2..40KGE, RGC3..30KGE

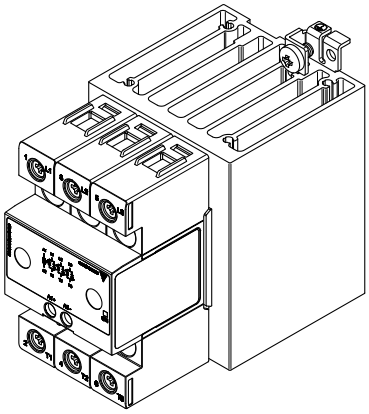

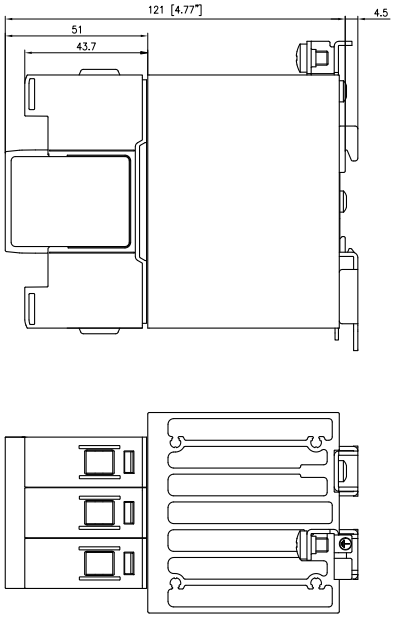

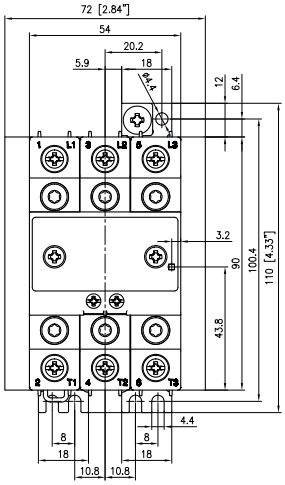

Housing width tolerance +0.5mm, -0mm as per DIN 43880.
All other tolerances +/- 0.5mm.
Dimensions in mm.

Dimensions

RGC2..40GGE.M, RGC3..30GGE.M

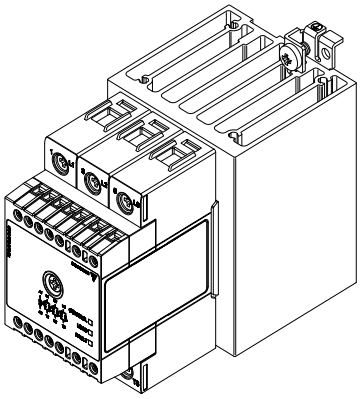

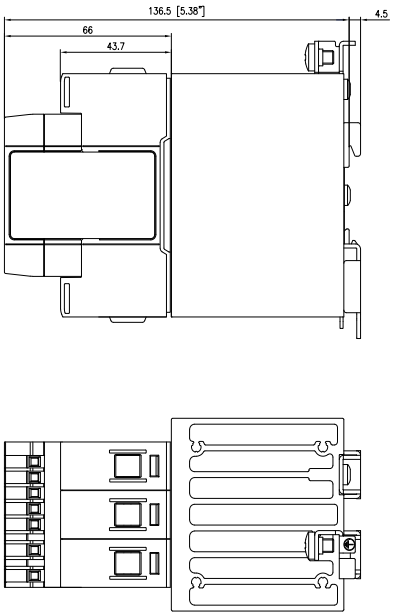

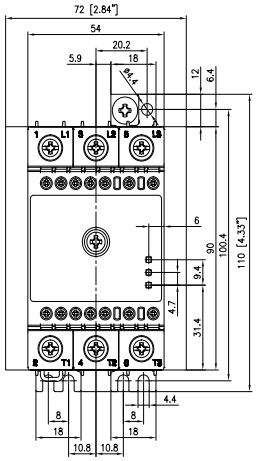

RGC3..40GGE.F

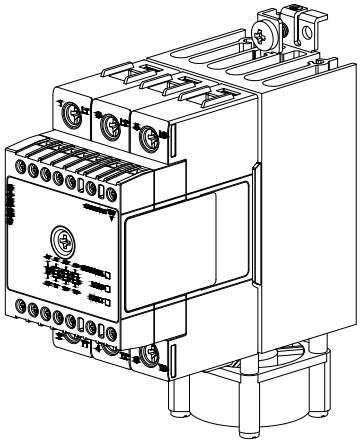

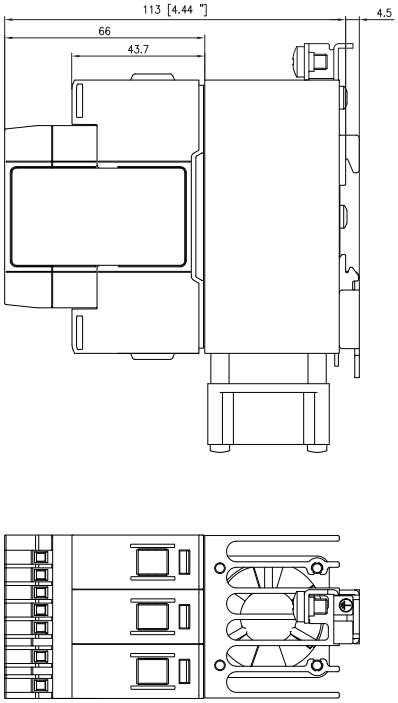

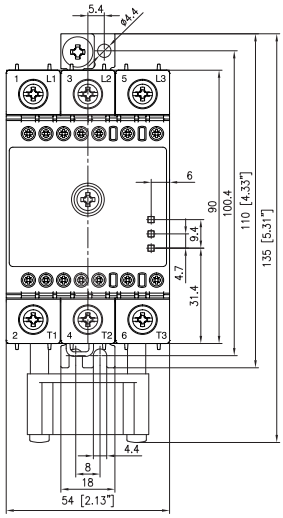

Housing width tolerance +0.5mm, -0mm as per DIN 43880.
All other tolerances +/- 0.5mm.
Dimensions in mm.

Dimensions

RGC2..75GGE.., RGC3..65GGE..

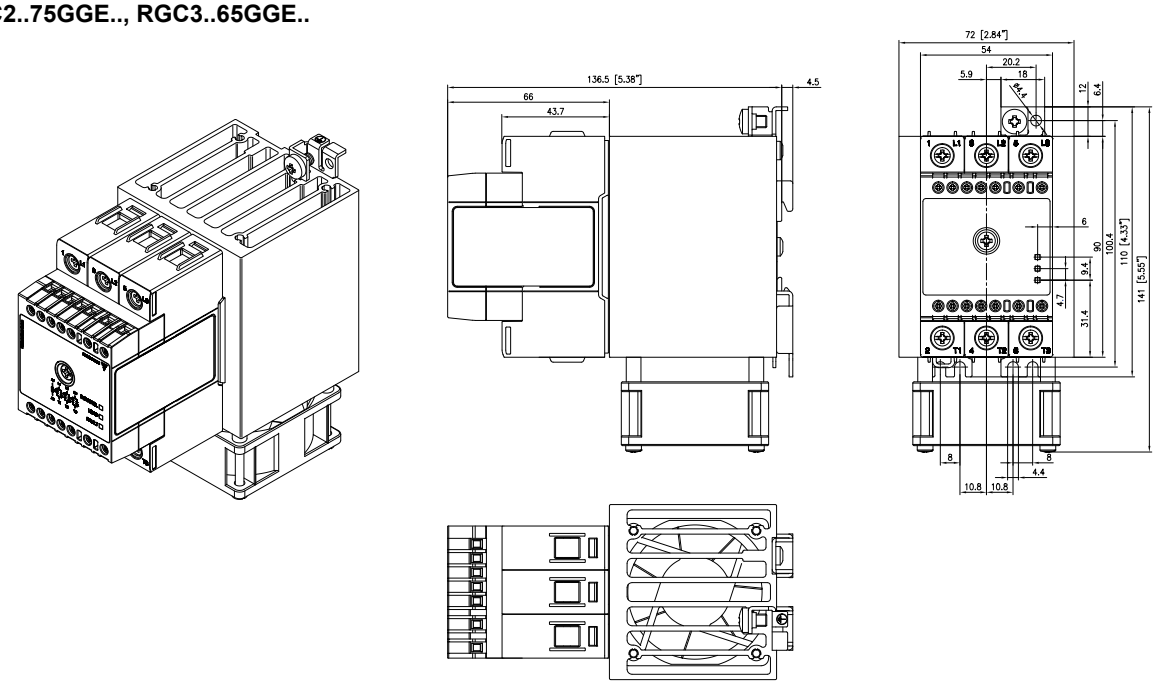

Housing width tolerance +0.5mm, -0mm as per DIN 43880.
All other tolerances +/- 0.5mm.
Dimensions in mm.

Dimensions

RGC3..48KGE

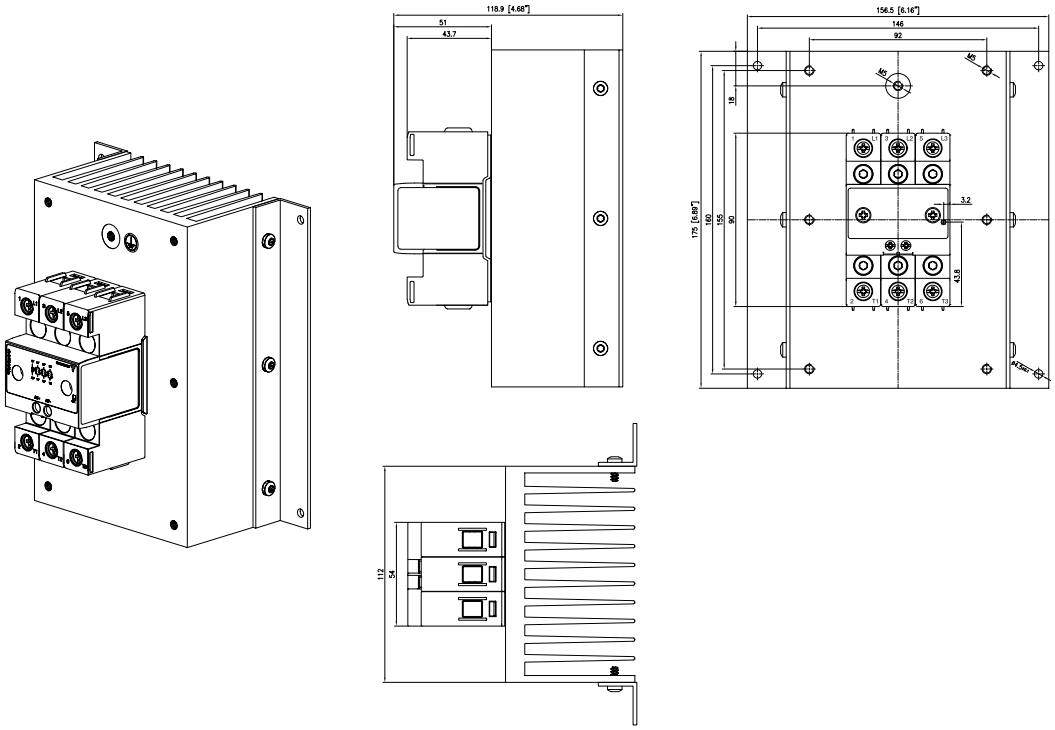

Housing width tolerance +0.5mm, -0mm as per DIN 43880.
All other tolerances +/- 0.5mm.
Dimensions in mm.

Terminal layout

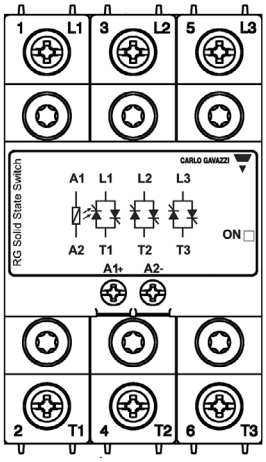

RGC2..10, RGC2..25, RGC2..40

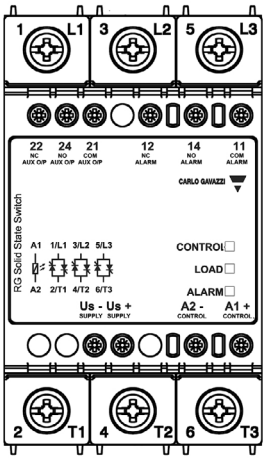

RGC2..25..DM, RGC2..40..DM
RGC3..20..DM, RGC3..25..DM,
RGC3..30..DM

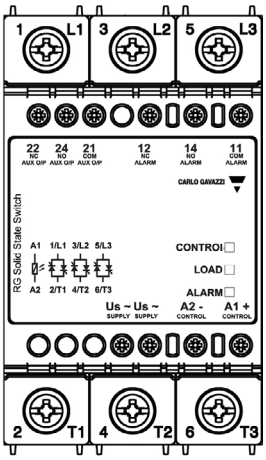

RGC2..25..AM, RGC2..40..AM
RGC3..20..AM, RGC3..25..AM,
RGC3..30..AM

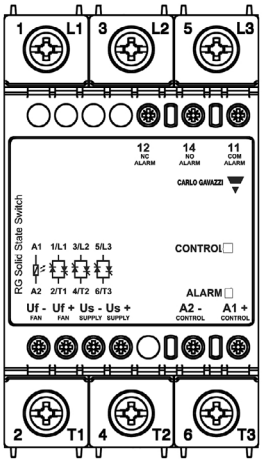

RGC2..75..DF
RGC3..40..DF, RGC3..65..DF

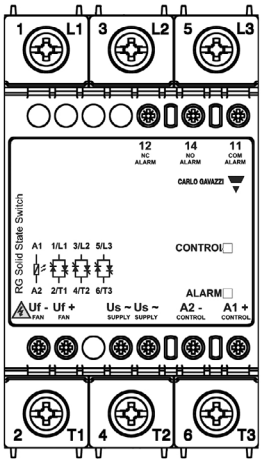

RGC2..75..AF
RGC3..40..AF, RGC3..65..AF

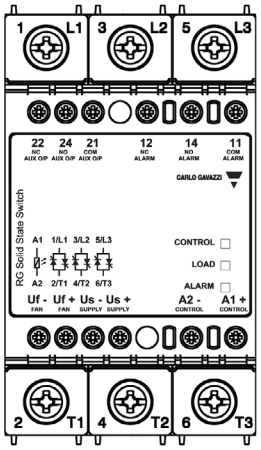

RGC2..75..DFM
RGC3..65..DFM

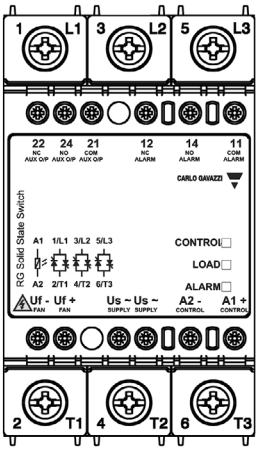

RGC2..75..AFM
RGC3..65..AFM

Terminals labelling:

1/L1, 2/L2, 3/L3:	Mains connections
2/T1, 4/T2, 6/T3:	Load connections
A1 (+):	Positive control signal
A2 (-):	Control ground
Us (+):	External supply positive signal
Us (-):	External supply ground
Us (~):	AC external supply
Uf (+):	Fan supply positive signal (no connection required by end user)
Uf (-):	Fan supply ground (no connection required by end user)
12:	Alarm EMR, normally closed
14:	Alarm EMR, normally open
11:	Alarm EMR, common terminal
22:	Auxiliary output, normally closed
24:	Auxiliary output, normally open
21:	Auxiliary output, common terminal

Connections to Uf+, Uf- are provided readily terminated by manufacturer. However, in case of needed user intervention on terminals Uf+, Uf- for the RGC..A..AF and RGC..A..AFM models, the mains supply has to be turned off first to avoid risk of electrical shock.

Connection Diagram

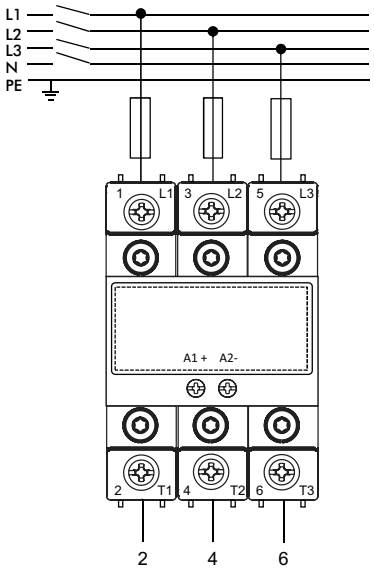

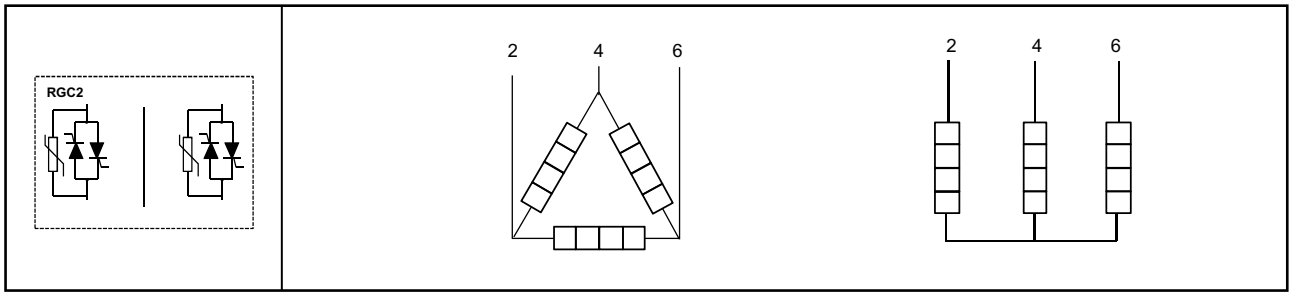

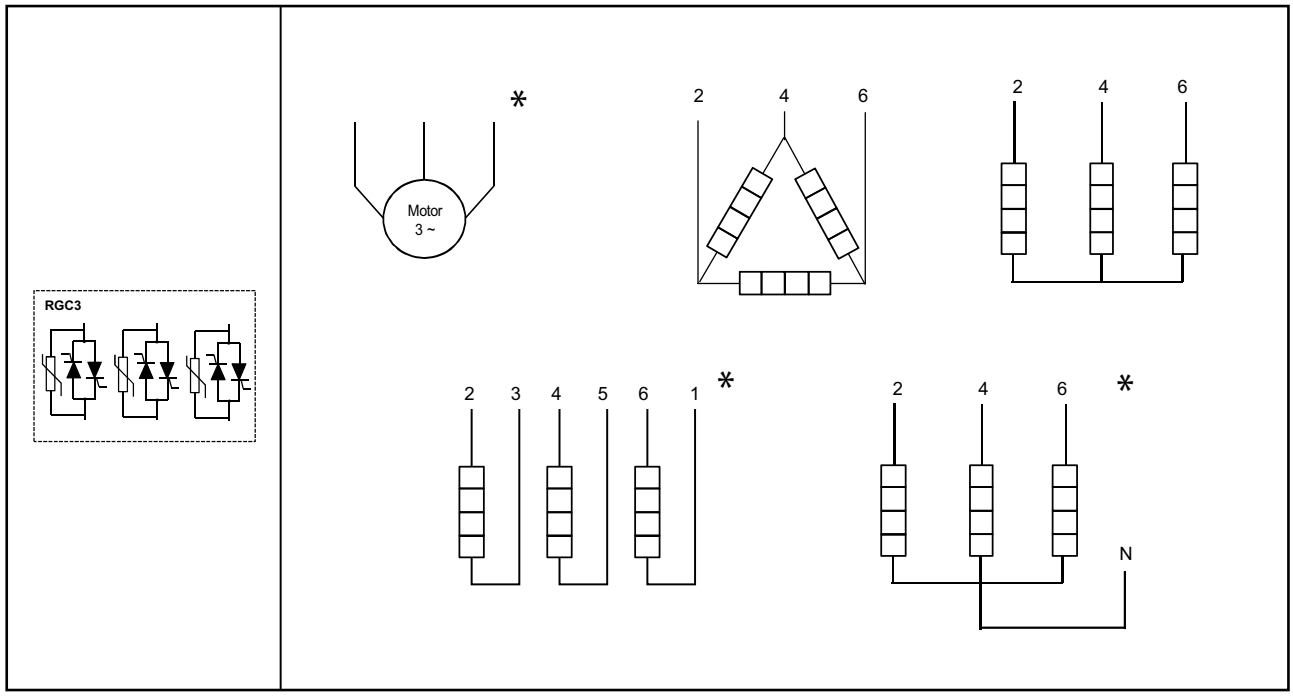

* Not suitable for use with RGC...M versions

Connection configuration for auxiliary output

Versions: RGC..D..DM, RGC..D..DFM
Auxiliary output signal 24 VDC, 50 mA; DC control, Uc (5-32 VDC); DC external supply, Us (24 VDC)

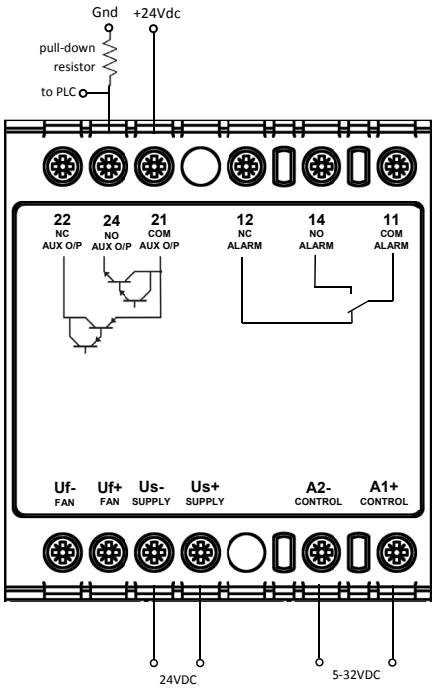

Connection of normally open auxiliary output (24-21) in a ‘pnp’ style

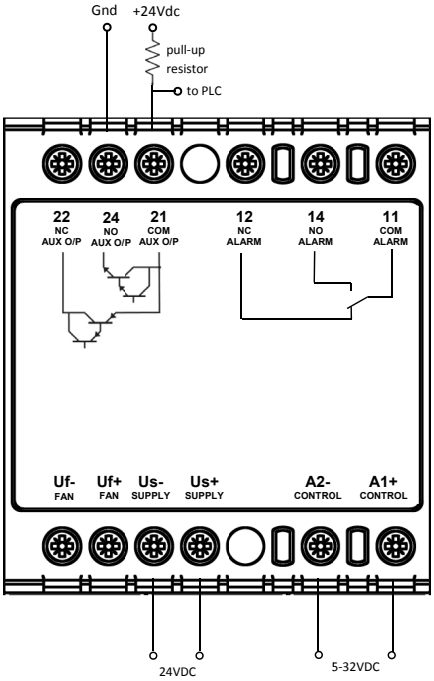

Connection of normally open auxiliary output (24-21) in an ‘npn’ style

Versions: RGC..D..AM, RGC..D..AFM
Auxiliary output signal 24 VDC, 50 mA; DC control, Uc (5-32 VDC); AC external supply, Us (90-250 VAC)

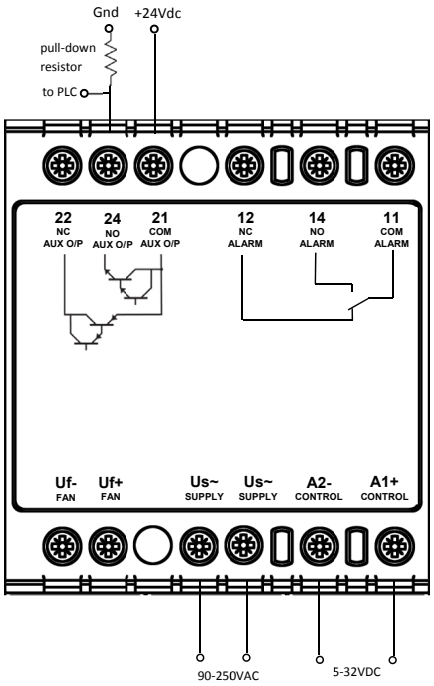

Connection of normally open auxiliary output (24-21) in a ‘pnp’ style

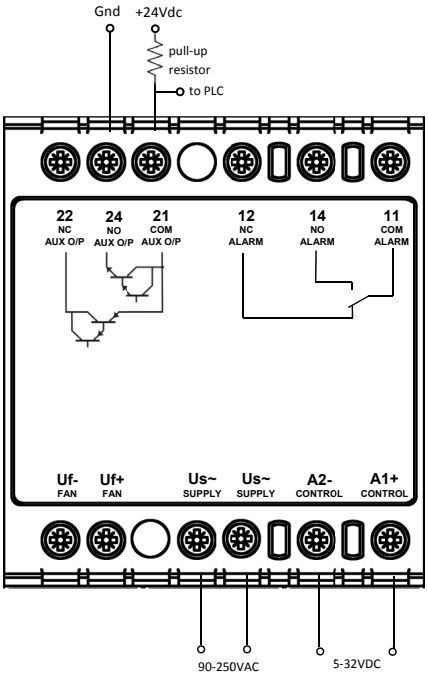

Connection of normally open auxiliary output (24-21) in an ‘npn’ style

Connection configuration for auxiliary output (continued)

Versions: RGC..A..AM, RGC..A..AFM
Auxiliary output signal 90-250 VAC, max. 1 A @ 25°C; AC control, Uc (20-275 VAC); AC external supply, Us (90-250 VAC)

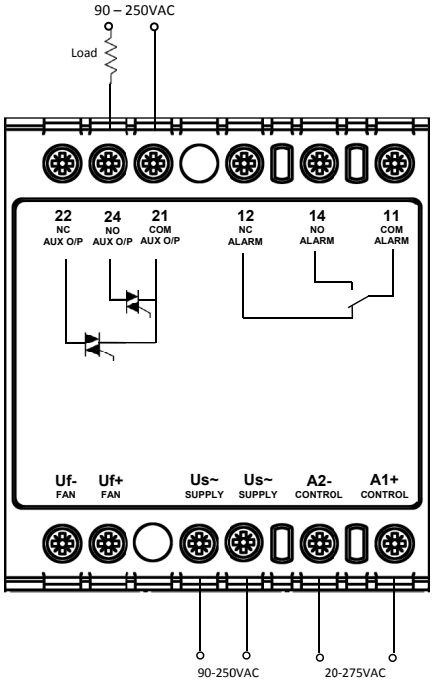

Connection of normally open auxiliary output (24-21) to an AC load

Note: In relation to the auxiliary output terminals 22, 24, 21; it is not possible to connect all 3 terminals to the auxiliary circuit. Preference shall be given to either a normally open (24-21) or normally closed (22-21) contact. The respective terminations shall be choosen and configured accordingly.

Installation

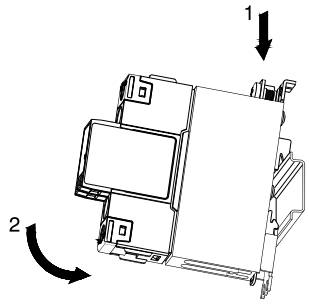

Mounting on DIN rail

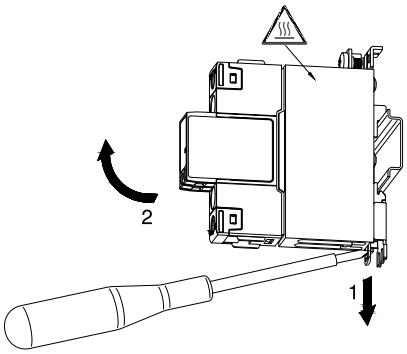

Dismounting from DIN rail

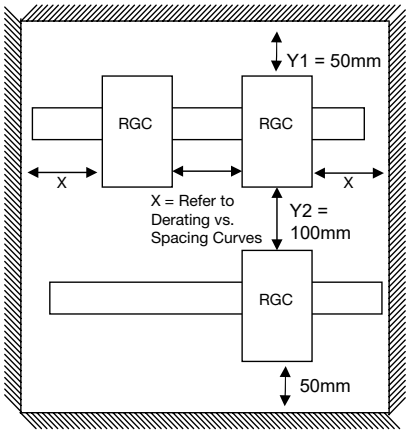

Installation for panel mount version

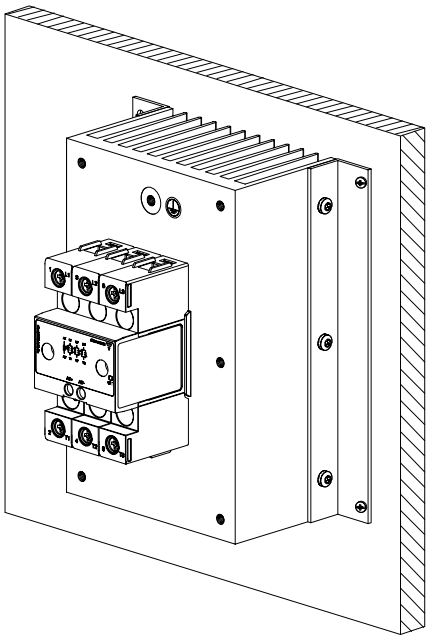

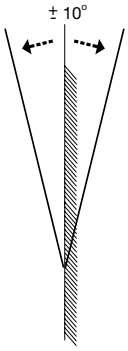

Ensure heatsink is mounted in an upright position for optimal airflow.

Connection Specifications

Power connection			
Terminal	1/L1, 3/L2, 5/L3, 2/T1, 4/T2, 6/T3		
Conductors	Use 75°C copper (Cu) conductors		
	RG..KKE, RG..GKE		RG..KGE, RG..GGE
	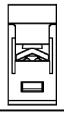	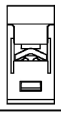	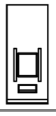
Stripping length	12 mm		11 mm
Connection type	M4 screw with captivated washer		M5 screw with box clamp
Rigid (solid & stranded) UL/CSA rated data	2x 2.5 – 6.0 mm² 2x 14 – 10 AWG	1x 2.5 – 6.0 mm² 1x 14 – 10 AWG	1x 2.5 – 25.0 mm² 1x 14 – 3 AWG
Flexible with end sleeve	2x 1.0 – 2.5 mm² 2x 2.5 – 4.0 mm² 2x 18 – 14 AWG 2x 14 – 12 AWG	1x 1.0 – 4.0 mm² 1x 18 – 12 AWG	1x 2.5 – 16.0 mm² 1x 14 – 6 AWG
Flexible without end sleeve	2x 1.0 – 2.5 mm² 2x 2.5 – 6.0 mm² 2x 18 – 14 AWG 2x 14 – 10 AWG	1x 1.0 – 6.0mm² 1x 18 –10 AWG	1x 4.0 – 25.0 mm² 1x 12 –3 AWG
Torque specifications	Pozidriv bit 2 UL: 2.0 Nm (17.7 lb-in) IEC: 1.5 – 2.0 Nm (13.3 – 17.7 lb-in)		Pozidriv bit 2 UL: 2.5 Nm (22 lb-in) IEC: 2.5 – 3.0 Nm (22 – 26.6 lb-in)
Aperture for termination lug (fork or ring)	12.3 mm		n/a
Protective Earth (PE) connection	M5, 1.5 Nm (13.3 lb-in) M5 PE screw is not provided with the solid state relay. PE connection is required when product is intended to be used in Class 1 applications according to EN/IEC 61140		

Control, supply and alarm connection			
Terminals	A1, A2		A1, A2, Us, Uf, 11, 12, 14, 21, 22, 24
	RG..KKE, RG..KGE		RG..GKE, RG..GGE
Conductors	Use 60/75°C copper (Cu) conductors		
Stripping length	8 mm		8 mm
Connection type	M3 screw with captivated washer		M3 screw with box clamp
Rigid (solid & stranded) UL/CSA rated data	2x 0.5 - 2.5 mm² 2x 18 - 12 AWG	1x 0.5 - 2.5 mm² 1x 18 - 12 AWG	1x 1.0 - 2.5 mm² 1x 18 - 12 AWG
Flexible with end sleeve	2x 0.5 - 2.5 mm² 2x 18 - 12 AWG	1x 0.5 - 2.5 mm² 1x 18 - 12 AWG	1x 0.5 - 2.5 mm² 1x 20 - 12 AWG
Torque specification	Pozidriv 1 UL: 0.5 Nm (4.4 lb-in) IEC: 0.5-0.6 Nm (4.4-5.3 lb-in)		Pozidriv 1 UL: 0.5 Nm (4.4 lb-in) IEC: 0.4-0.5 Nm (3.5-4.4 lb-in)

COPYRIGHT ©2025
Content subject to change.
Download the PDF: https://gavazziautomation.com