© 2025 TE Connectivity. All Rights Reserved.

REVISIONS					
P	LTR	DESCRIPTION	DATE	DWN	APVD
	B4	UPDATE FOR DRAWING FORMAT	06DEC2025	F.Z	L.L

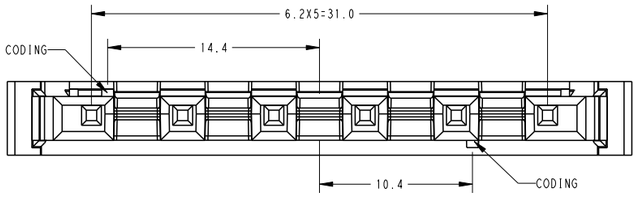

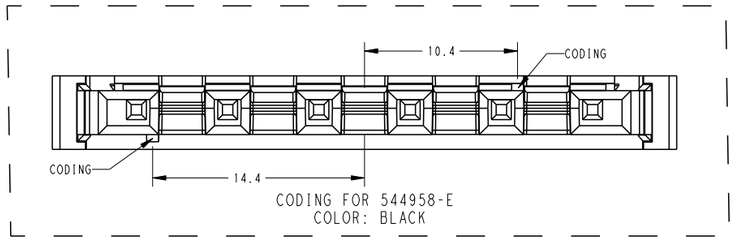

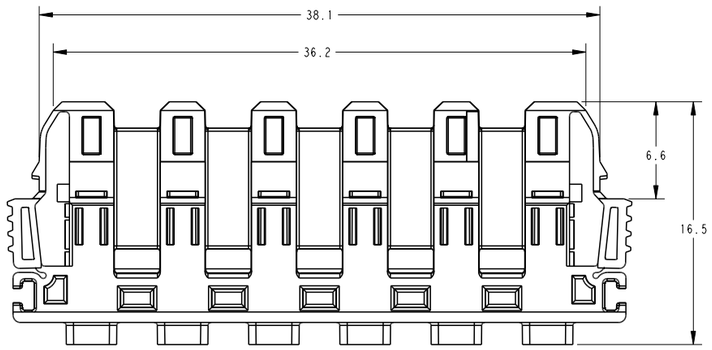

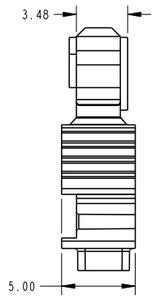

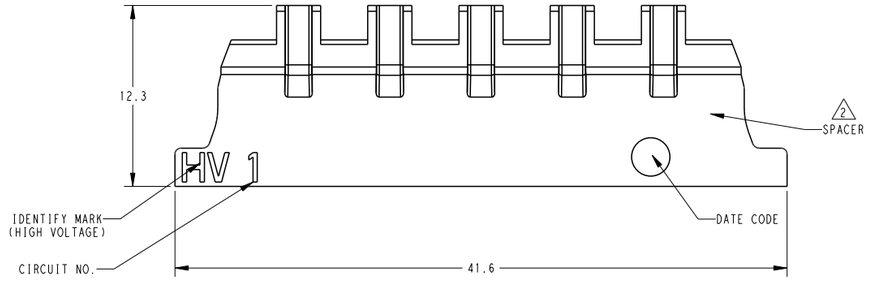

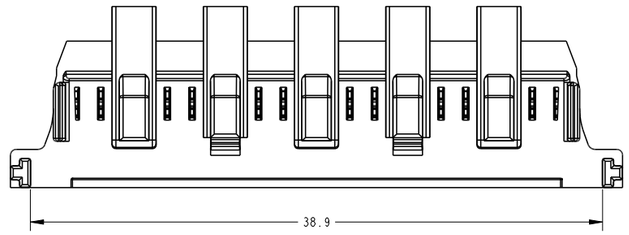

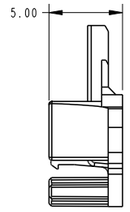

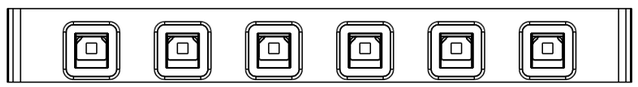

NOTES

MATERIAL

1 HOUSING: GLASS FIBER FILLED HIGH TEMPERATURE PA
COLOR: ORANGE OR BLACK

2 SPACER: GLASS FIBER FILLED HIGH TEMPERATURE PA
CORLOR: ORANGE

3 PACAKGE: BULK PACKAGE, QUANTITY: 500PCS/UNIT

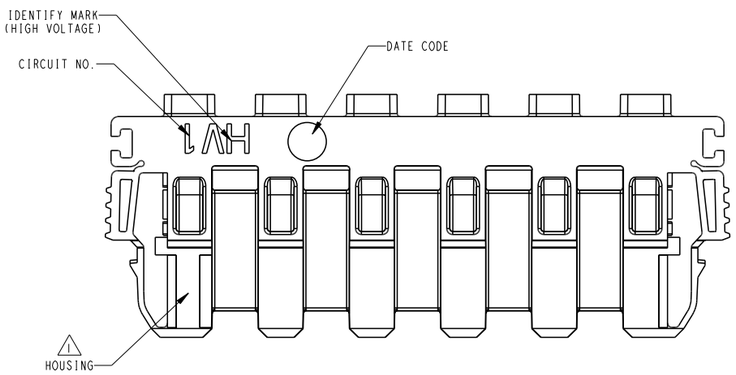

PART NUMBER: 544959-E
COLOR: ORANGE

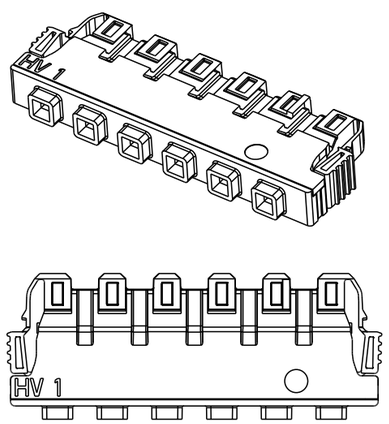

VIEW OF FEMALE CONNECTOR
(AFTER CRIMPIED CABLE ASSEMBLY)

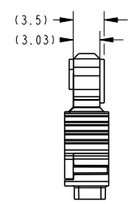

PART NUMBER	Coding	COLOR	PACKAGING 3	NOTE
544959-E	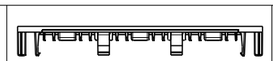	orange	Unit 250 (bulk packaging)	fitting for coding: PN: 524236-E orange A PN: 524265-E orange P
		orange		
544958-E		orange	Unit 250 (bulk packaging)	fitting for coding: PN: 524235-E - black A PN: 524264-E - black P
	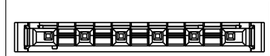	black		

THIS DRAWING IS A CONTROLLED DOCUMENT.

DIMENSIONS: mm

TOLERANCES UNLESS OTHERWISE SPECIFIED: DIM FOR INFORMATION
0 PLC ± ISO 8015
1 PLC ±
2 PLC ±
3 PLC ±
4 PLC ±
ANGLES ±

MATERIAL - -

FINISH - -

DWN Fisher ZHU 06DEC2025
CHK Liam LING 06DEC2025
APVD Liam LING 06DEC2025
PRODUCT SPEC 108-94917
APPLICATION SPEC 114-94917
WEIGHT -

TE Connectivity

NAME ERNI-VolTron 1000 Female Cable Outlet 180 6.20 SRC-A 06P

SIZE	CAGE CODE	DRAWING NO	RESTRICTED TO
A1	00779	C-524202-E	-

CUSTOMER DRAWING | SCALE 3:1 | SHEET 1 OF 1 | REV B4

4805 (3/13)