PIC32CM16/32 GV00 Family Data Sheet

PIC32CM16/32 GV00

Product Page Links

Low-Power, 32-bit Cortex-M0+ MCUs with 12-bit ADC, 256-Channel PTC, RTC, and SERCOM

Operating Conditions

- 1.62V – 3.63V, -40°C to +85°C, DC up to 48 MHz
- 2.7V – 3.63V, -40°C to +125°C Extended Temperature with compliance to AEC-Q100, DC up to 32 MHz

Core

- Arm® Cortex®-M0+ CPU running at up to 48 MHz
  - Single-cycle hardware multiplier

Peripherals

- 8-channel Event System
- Up to eight 16-bit Timer/Counters (TC), configurable as:
  - One 16-bit TC with two compare/capture channels
  - One 8-bit TC with two compare/capture channels
  - One 32-bit TC with two compare/capture channels, by using two TCs
- 32-bit Real Time Counter (RTC) with clock/calendar function
- Watchdog Timer (WDT)
- CRC-32 generator
- Up to six Serial Communication Interfaces (SERCOM), each configurable to operate as either:
  - USART with full-duplex and single-wire half-duplex configuration
  - Inter-Integrated Circuit (I^2C) up to 400 kHz
  - Serial Peripheral Interface (SPI)
- One 12-bit, 350 ksps Analog-to-Digital Converter (ADC) with up to 20 channels
  - Differential and single-ended input
  - 1/2x to 16x programmable gain stage
  - Automatic offset and gain error compensation
  - Oversampling and decimation in hardware to support 13-bit, 14-bit, 15-bit, or 16-bit resolution
- 10-bit, 350 ksps Digital-to-Analog Converter (DAC)
- Two Analog Comparators (AC) with Window Compare function
- Peripheral Touch Controller (PTC)
  - Up to 256-channel capacitive touch and proximity sensing

Memories

- 16/32 KB in-system self-programmable Flash
- 2/4 KB SRAM

System

- Power-on Reset (POR) and Brown-out Detection (BOD)
- Internal and external clock options with 48 MHz Digital Frequency Locked Loop (DFLL48M) and 48 MHz to 96 MHz
- External Interrupt Controller (EIC)
- Up to 16 external interrupts
- One non-maskable interrupt
- Two-pin Serial Wire Debug (SWD) programming, test and debugging interface

Low Power

- Idle and Standby Sleep modes
- SleepWalking peripherals

I/O

- Up to 52 programmable I/O pins

Packages

- 64-pin TQFP, VQFN
- 48-pin TQFP, VQFN
- 32-pin TQFP, VQFN

Power Consumption

- Power Consumption
  - Down to 50 µA/MHz in Active mode
  - Down to 8 µA running the PTC

Debugger Development Support

- Program and Debug Interface Disable (PDID)

Type	VQFN			TQFP		
Pin Count	32	48	64	32	48	64
I/O Pins (up to)	26	38	52	26	38	52
Contact/Lead Pitch	0.5 mm	0.5 mm	0.5 mm	0.8 mm	0.5 mm	0.5 mm
Dimensions	5x5x1 mm	7x7x0.9 mm	9x9x1 mm	7x7x1 mm	7x7x1 mm	10x10x1 mm

© 2025 Microchip Technology Inc. and its subsidiaries

Table of Contents

Low-Power, 32-bit Cortex-M0+ MCUs with 12-bit ADC, 256-Channel PTC, RTC, and SERCOM..... 1

1. Configuration Summary..... 9

2. Ordering Information [(1)]..... 10

3. Block Diagram.....11

4. Pinout and Packaging..... 12
   - 4.1. 64-pin VQFN/64-pin TQFP Pinout and Multiplexing..... 12
   - 4.2. 48-pin VQFN/48-pin TQFP Pinout and Multiplexing..... 16
   - 4.3. 32-pin VQFN/32-pin TQFP Pinout and Multiplexing..... 19

5. Signal Description..... 23

6. Power Supply and Start-Up Considerations..... 30
   - 6.1. Power Domain Overview..... 30
   - 6.2. Power Supply Considerations..... 30
   - 6.3. Power-Up..... 31
   - 6.4. Power-on Reset (POR) and Brown-out Detector (BOR)..... 32

7. Product Mapping.....33
   - 7.1. Embedded Memories.....33
   - 7.2. Physical Memory Map..... 33
   - 7.3. Peripheral Bus A Address Map.....33
   - 7.4. Peripheral Bus B Address Map.....34
   - 7.5. Peripheral Bus C Address Map.....34
   - 7.6. NVM Calibration and Auxiliary Space.....34
   - 7.7. NVM User Row Mapping..... 35
   - 7.8. NVM Software Calibration Area Mapping..... 36
   - 7.9. Serial Number..... 36

8. Processor And Architecture..... 38
   - 8.1. Cortex M0+ Processor..... 38
   - 8.2. Nested Vector Interrupt Controller..... 39
   - 8.3. High-Speed Bus System..... 40
   - 8.4. AHB-APB Bridge..... 41
   - 8.5. Peripheral Access Controller (PAC)..... 43
   - 8.6. Register Description..... 43

9. Peripheral Dependencies.....56

10. Device Service Unit (DSU).....58
    - 10.1. Overview..... 58
    - 10.2. Features..... 58
    - 10.3. Block Diagram..... 58
    - 10.4. Signal Description..... 58
    - 10.5. Peripheral Dependencies.....59
    - 10.6. Debug Operation..... 59

© 2025 Microchip Technology Inc. and its subsidiaries

10.7. Chip Erase.... 61
10.8. Programming.... 62
10.9. Intellectual Property Protection.... 62
10.10. Program and Debug Interface Disable (PDID).... 63
10.11. Device Identification.... 63
10.12. Functional Description.... 64
10.13. Register Summary 69

11. Clock System.... 94
11.1. Clock Distribution.... 94
11.2. Synchronous and Asynchronous Clocks.... 95
11.3. Register Synchronization.... 95
11.4. Enabling a Peripheral.... 99
11.5. Disabling a Peripheral.... 100
11.6. On-demand, Clock Requests.... 100
11.7. Power Consumption vs. Speed.... 101
11.8. Clocks After Reset.... 101

12. GCLK - Generic Clock Controller.... 102
12.1. Overview.... 102
12.2. Features.... 102
12.3. Block Diagram.... 102
12.4. Signal Description.... 103
12.5. Peripheral Dependencies.... 103
12.6. Functional Description.... 104
12.7. Register Summary Register Summary.... 109

13. PM - Power Manager 120
13.1. Features.... 120
13.2. Block Diagram.... 121
13.3. Signal Description.... 121
13.4. Peripheral Dependencies.... 121
13.5. Functional Description.... 123
13.6. Register Summary 129

14. SYSCTRL – System Controller.... 149
14.1. Overview.... 149
14.2. Features.... 149
14.3. Block Diagram.... 150
14.4. Signal Description.... 151
14.5. Peripheral Dependencies.... 151
14.6. Functional Description.... 152
14.7. Register Summary 163

15. WDT – Watchdog Timer.... 194
15.1. Overview.... 194
15.2. Features.... 194
15.3. Block Diagram.... 194
15.4. Signal Description.... 195
15.5. Peripheral Dependencies.... 195

© 2025 Microchip Technology Inc. and its subsidiaries

15.6. Functional Description 196
15.7. Register Summary 201

16. RTC – Real-Time Counter 211
16.1. Overview 211
16.2. Features 211
16.3. Block Diagram 211
16.4. Signal Description 212
16.5. Peripheral Dependencies 212
16.6. Functional Description 213
16.7. Register Summary Mode 0 Register Summary 219
16.8. Register Summary Mode 1 232
16.9. Register Summary Mode 2 242

17. EIC – External Interrupt Controller 254
17.1. Overview 254
17.2. Features 254
17.3. Block Diagram 254
17.4. Signal Description 254
17.5. Product Dependencies 255
17.6. Functional Description 256
17.7. Register Summary 260

18. Nonvolatile Memory Controller (NVMCTRL) 271
18.1. Overview 271
18.2. Features 271
18.3. Block Diagram 271
18.4. Signal Description 271
18.5. Peripheral Dependencies 272
18.6. Functional Description 273
18.7. Register Summary 280

19. PORT - I/O Pin Controller 293
19.1. Overview 293
19.2. Features 293
19.3. Block Diagram 294
19.4. Signal Description 294
19.5. Peripheral Dependencies 294
19.6. Functional Description 296
19.7. Register Summary 301

20. Event System (EVSYS) 325
20.1. Overview 325
20.2. Features 325
20.3. Block Diagram 325
20.4. Signal Description 325
20.5. Peripheral Dependencies 326
20.6. Functional Description 327
20.7. Register Summary 332

© 2025 Microchip Technology Inc. and its subsidiaries

21. SERCOM – Serial Communication Interface....342
21.1. Overview....342
21.2. Features....342
21.3. Block Diagram....342
21.4. Signal Description....342
21.5. Peripheral Dependencies....343
21.6. Functional Description....344

22. SERCOM USART - SERCOM Synchronous and Asynchronous Receiver and Transmitter....349
22.1. Overview....349
22.2. USART Features....349
22.3. Block Diagram....350
22.4. Signal Description....350
22.5. Product Dependencies....350
22.6. Functional Description....351

23. Register Summary....359
23.1. Control A....360
23.2. Control B....363
23.3. Debug Control....365
23.4. Baud....366
23.5. Interrupt Enable Clear....367
23.6. Interrupt Enable Set....369
23.7. Interrupt Flag Status and Clear....371
23.8. Status....372
23.9. Data....374

24. SERCOM SPI – SERCOM Serial Peripheral Interface....375
24.1. Overview....375
24.2. Features....375
24.3. Block Diagram....375
24.4. Signal Description....376
24.5. Product Dependencies....376
24.6. Functional Description....377
24.7. Register Summary....385

25. SERCOM I^2C – Inter-Integrated Circuit....399
25.1. Overview....399
25.2. Features....399
25.3. Block Diagram....399
25.4. Signal Description....400
25.5. Product Dependencies....400
25.6. Functional Description....401
25.7. Register Summary - I2C Client....412
25.8. Register Summary - I2C Host....424

26. Timer/Counter (TC)....439
26.1. Overview....439
26.2. Features....439
26.3. Block Diagram....440

© 2025 Microchip Technology Inc. and its subsidiaries

26.4. Signal Description....440
26.5. Peripheral Dependencies....441
26.6. Functional Description....442
26.7. Register Summary for 8-bit Registers....452
26.8. Register Summary for 16-bit Registers....470
26.9. Register Summary for 32-bit Registers....487

27. ADC - Analog-to-Digital Converter....504
27.1. Overview....504
27.2. Features....504
27.3. Block Diagram....505
27.4. Signal Description....505
27.5. Peripheral Dependencies....506
27.6. Functional Description....507
27.7. Register Summary....515

28. AC – Analog Comparators....539
28.1. Overview....539
28.2. Features....539
28.3. Block Diagram....540
28.4. Signal Description....540
28.5. Peripheral Dependencies....540
28.6. Functional Description....542
28.7. Register Summary....551

29. DAC – Digital-to-Analog Converter....567
29.1. Overview....567
29.2. Features....567
29.3. Block Diagram....567
29.4. Signal Description....567
29.5. Peripheral Dependencies....567
29.6. Functional Description....568
29.7. Register Summary....572

30. PTC - Peripheral Touch Controller....582
30.1. Overview....582
30.2. Feature....582
30.3. Block Diagram....583
30.4. Signal Description....583
30.5. Peripheral Dependencies....584
30.6. Functional Description....585

31. Electrical Specifications 85°C....586
31.1. Disclaimer....586
31.2. Absolute Maximum Ratings....586
31.3. General Operating Ratings and Thermal Conditions....586
31.4. Power Supply....587
31.5. MCU Active Power....590
31.6. MCU Idle Power....591
31.7. MCU Standby Power....592

© 2025 Microchip Technology Inc. and its subsidiaries

31.8. Wake-Up Power ... 593
31.9. Peripheral Power ... 593
31.10. I/O Specifications ... 595
31.11. Internal Voltage Reference Specifications ... 601
31.12. Maximum Clock Frequencies ... 601
31.13. Peripheral Touch Controller (PTC) Electrical Specifications ... 602
31.14. XOSC Electrical Specifications ... 603
31.15. XOSC32K Electrical Specifications ... 605
31.16. OSC32K Electrical Specifications ... 607
31.17. OSC8M Electrical Specifications ... 607
31.18. OSCULP32K Electrical Specifications ... 607
31.19. DFLL48M Electrical Specifications ... 608
31.20. Digital-to-Analog Controller (DAC) Specifications ... 608
31.21. Analog-to-Digital Controller (ADC) Specifications ... 610
31.22. Analog Comparator (AC) Electrical Specifications ... 617
31.23. Serial Peripheral Interface (SPI) Mode Electrical Specifications ... 618
31.24. SERCOM Synchronous and Asynchronous Receiver and Transmitter (SERCOM USART) Electrical Specifications ... 622
31.25. SERCOM Inter-Integrated Circuit (SERCOM I^2C) Electrical Specifications ... 622
31.26. Timer Counter (TC) Electrical Specifications ... 626
31.27. Temperature Sensor (TSENS) ... 627
31.28. NVM Block (Flash, Data Flash, NVM Configuration Rows) Electrical Specifications ... 627
31.29. SWD 2-Wire Electrical Specifications ... 628

32. Electrical Specifications 125°C ... 629
32.1. Absolute Maximum Ratings ... 629
32.2. General Operating Ratings and Thermal Conditions ... 629
32.3. Active Power Specifications ... 630
32.4. Idle Power Specifications ... 631
32.5. Standby Power Specifications ... 631
32.6. Wake-Up Power Specifications ... 632
32.7. I/O Pin Electrical Specifications ... 632
32.8. Internal Voltage Reference Specifications ... 635
32.9. Maximum Clock Frequencies Electrical Specifications ... 635
32.10. OSC32K Electrical Specifications ... 636
32.11. OSC8M Electrical Specifications ... 636
32.12. OSCULP32K Electrical Specifications ... 637
32.13. DFLL Electrical Specifications ... 637
32.14. Digital-to-Analog Converter (DAC) Electrical Specifications ... 637
32.15. Analog-to-Digital Converter (ADC) Electrical Specifications ... 638
32.16. Analog Comparator (AC) Electrical Specifications ... 645
32.17. SPI Mode Electrical Specifications ... 646
32.18. NVM Block (Flash, Data Flash, NVM Configuration Rows) Electrical Specifications ... 647

33. Packaging Information ... 648
33.1. Package Drawings ... 648
33.2. Soldering Profile ... 666

34. Schematic Checklist ... 668

© 2025 Microchip Technology Inc. and its subsidiaries

34.1. Introduction....668
34.2. Power Supply....668
34.3. External Analog Reference Connections....670
34.4. External Reset Circuit....671
34.5. Clocks and Crystal Oscillators....672
34.6. Unused or Unconnected Pins....673
34.7. Programming and Debugging Ports....673

35. Revision History....677

36. Conventions....678
36.1. Numerical Notation....678
36.2. Memory Size and Type....678
36.3. Frequency and Time....678
36.4. Registers and Bits....678

37. Acronyms and Abbreviations....680

38. Product Identification System....682

Microchip Information....683
Trademarks....683
Legal Notice....683
Microchip Devices Code Protection Feature....683

Product Page Links....684

© 2025 Microchip Technology Inc. and its subsidiaries

1. Configuration Summary

Table 1-1. Device-Specific Features

Device P/N	Pin Count	Flash (KB)	SRAM (KB)	SPI	I^2C	UART	TC	AC	12-bit ADC	PTC
PIC32CM3204GV00064	64	32	4	6	6	6	8	2	20ch	32ch
PIC32CM1602GV00064	64	16	2	6	6	6	8	2	20ch	32ch
PIC32CM3204GV00048	48	32	4	6	6	6	6	2	14ch	22ch
PIC32CM1602GV00048	48	16	2	6	6	6	6	2	14ch	22ch
PIC32CM3204GV00032	32	32	4	4	4	4	6	2	10ch	16ch
PIC32CM1602GV00032	32	16	2	4	4	4	6	2	10ch	16ch

© 2025 Microchip Technology Inc. and its subsidiaries

2. Ordering Information [1]

PIC32 CM XXXX GV00 XXX T - I /T5X -XXX

Microchip Brand

Product Family
CM - Cortex M0+

Memory Size
1602 - 16-KB Flash and 2-KB RAM
3204 - 32-KB Flash and 4-KB RAM

Key Feature Set
GV00 =

Pin Count
032 = 32 pin
048 = 48 pin
064 = 64 pin

Pattern
Three-digit QTP, SQTP code or special requirement (blank otherwise)

Package Type
T5X- 32-pin TQFP
RTB - 32-pin VQFN[1]
Y8X - 48-pin TQFP
U5B - 48-pin VQFN[1]
V2X - 64pin TQFP
5LX - 64pin VQFN[1]

Temperature Range
I = -40°C to + 85°C (Industrial)
E = -40°C to + 125°C (Extended)[2]

Tape and Reel Flag
T = Tape and Reel
No Character = Tray/Tube (Default)

Note:

1. Not all combinations are valid. The available device part numbers are listed in configuration Summary.
2. Contact a local Microchip sales office for additional information.

© 2025 Microchip Technology Inc. and its subsidiaries

3. Block Diagram

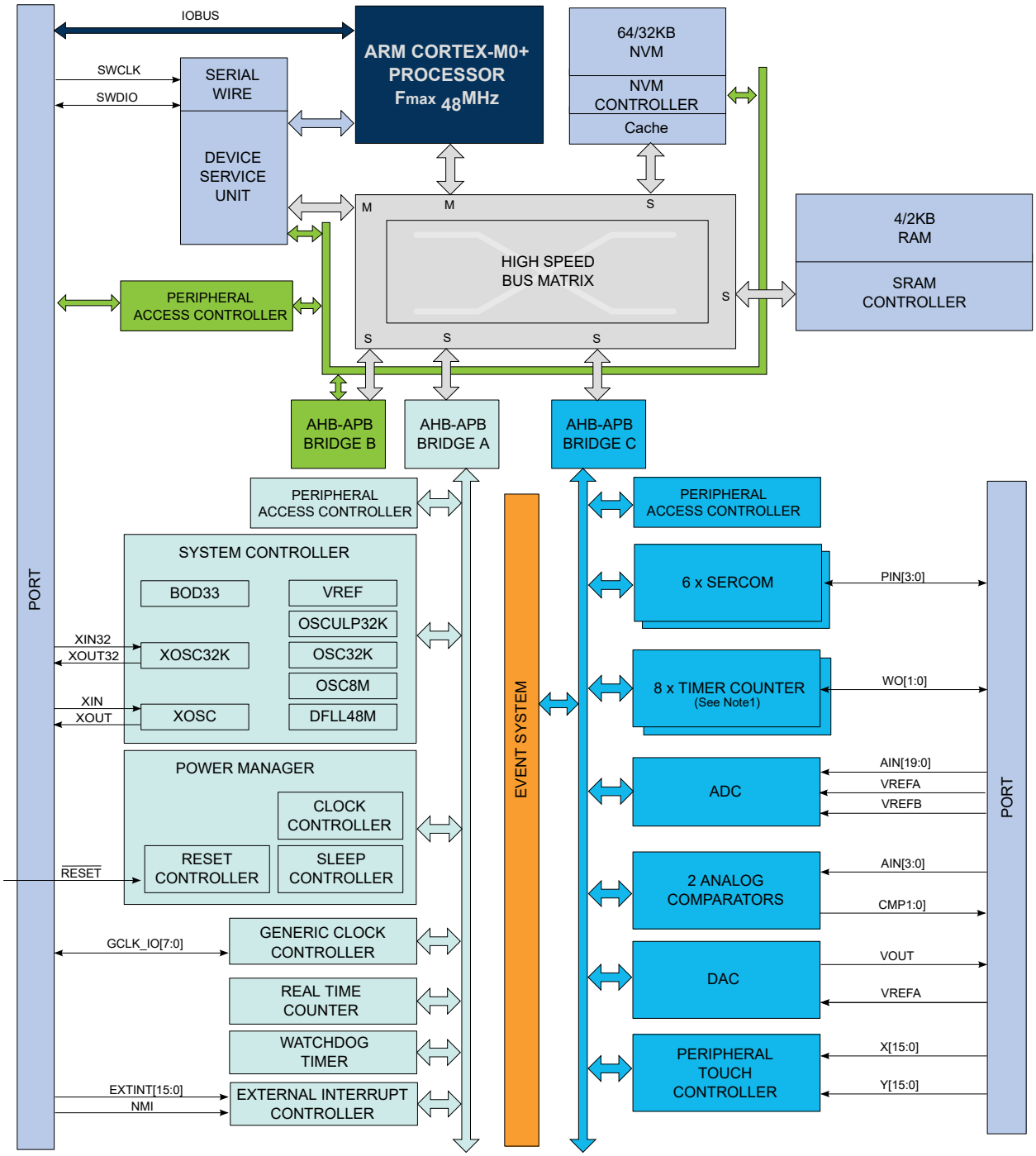

Note: 1. Some products have different number of SERCOM instances, Timer/Counter instances, PTC signals and ADC signals. Refer to *Peripherals Configuration Summary* for details.

© 2025 Microchip Technology Inc. and its subsidiaries

4. Pinout and Packaging

4.1. 64-pin VQFN/64-pin TQFP Pinout and Multiplexing

Table 4-1. 64-pin VQFN/64-pin TQFP

	64-pin VQFN Top View	64-pin TQFP Top View
PIC32CM3204GV00064 PIC32CM1602GV00064	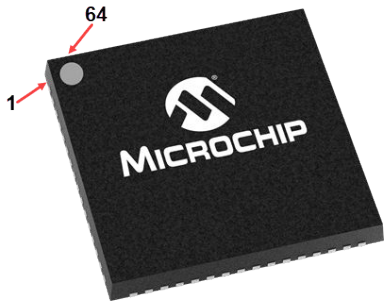	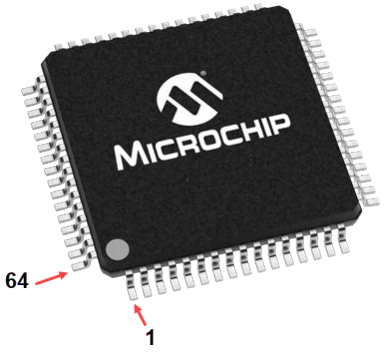

© 2025 Microchip Technology Inc. and its subsidiaries

Table 4-2. 64-pin VQFN/64-pin TQFP Pinout

Pin	MUXEN = 0	MUXEN = 1													Supply
		PMUX Values													
		00	01					02	03	04	05	06	07		
	Port	EIC	REF	ADC	AC	PTC	DAC	SERCOM	SERCOM-ALT	TC	TC-ALT	COM	AC / GCLK	SYSCTRL	
1	PA00	EXTINT[0]	—	—	—		—	—	SERCOM1/ PAD[0]	—	TC2/ WO[0]	—	—	XIN32	AVDD
2	PA01	EXTINT[1]	—	—	—		—	—	SERCOM1/ PAD[1]	—	TC2/ WO[1]	—	—	XOUT32	AVDD
3	PA02	EXTINT[2]	—	AIN[0]	—	Y[0]	VOUT	—	—	—	—	—	—	—	AVDD
4	PA03	EXTINT[3]	ADC/ VREFA DAC/ VREFA	AIN[1]	—	Y[1]	—	—	—	—	—	—	—	—	AVDD
5	PB04	EXTINT[4]	—	AIN[12]	—	Y[10]	—	—	—	—	—	—	—	—	AVDD
6	PB05	EXTINT[5]	—	AIN[13]	—	Y[11]	—	—	—	—	—	—	—	—	AVDD
7	AGND	—	—	—	—	—	—	—	—	—	—	—	—	—	—
8	AVDD	—	—	—	—	—	—	—	—	—	—	—	—	—	—
9	PB06	EXTINT[6]	—	AIN[14]	—	Y[12]	—	—	—	—	—	—	—	—	AVDD
10	PB07	EXTINT[7]	—	AIN[15]	—	Y[13]	—	—	—	—	—	—	—	—	AVDD
11	PB08	EXTINT[8]	—	AIN[2]	—	Y[14]	—	—	SERCOM4/ PAD[0]	—	TC4/ WO[0]	—	—	—	AVDD
12	PB09	EXTINT[9]	—	AIN[3]	—	Y[15]	—	—	SERCOM4/ PAD[1]	—	TC4/ WO[1]	—	—	—	AVDD
13	PA04	EXTINT[4]	ADC/ VREFB	AIN[4]	AIN[0]	Y[2]	—	—	SERCOM0/ PAD[0]	—	TC0/ WO[0]	—	—	—	AVDD
14	PA05	EXTINT[5]	—	AIN[5]	AIN[1]	Y[3]	—	—	SERCOM0/ PAD[1]	—	TC0/ WO[1]	—	—	—	AVDD
15	PA06	EXTINT[6]	—	AIN[6]	AIN[2]	Y[4]	—	—	SERCOM0/ PAD[2]	—	TC1/ WO[0]	—	—	—	AVDD
16	PA07	EXTINT[7]	—	AIN[7]	AIN[3]	Y[5]	—	—	SERCOM0/ PAD[3]	—	TC1/ WO[1]	—	—	—	AVDD
17	PA08	NMI	—	AIN[16]	—	X[0]	—	SERCOM0/ PAD[0]	SERCOM2/ PAD[0]	TC0/ WO[0]	—	—	—	—	VDDIO
18	PA09	EXTINT[9]	—	AIN[17]	—	X[1]	—	SERCOM0/ PAD[1]	SERCOM2/ PAD[1]	TC0/ WO[1]	—	—	—	—	VDDIO
19	PA10	EXTINT[10]	—	AIN[18]	—	X[2]	—	SERCOM0/ PAD[2]	SERCOM2/ PAD[2]	TC1/ WO[0]	—	—	GCLK_IO[4]	—	VDDIO
20	PA11	EXTINT[11]	—	AIN[19]	—	X[3]	—	SERCOM0/ PAD[3]	SERCOM2/ PAD[3]	TC1/ WO[1]	—	—	GCLK_IO[5]	—	VDDIO
21	VDDIO	—	—	—	—	—	—	—	—	—	—	—	—	—	—
22	GND	—	—	—	—	—	—	—	—	—	—	—	—	—	—
23	PB10	EXTINT[10]	—	—	—	—	—	—	SERCOM4/ PAD[2]	—	TC5/ WO[0]	—	GCLK_IO[4]	—	VDDIO
24	PB11	EXTINT[11]	—	—	—	—	—	—	SERCOM4/ PAD[3]	—	TC5/ WO[1]	—	GCLK_IO[5]	—	VDDIO
25	PB12	EXTINT[12]	—	—	—	X[12]	—	SERCOM4/ PAD[0]	—	TC4/ WO[0]	—	—	GCLK_IO[6]	—	VDDIO
26	PB13	EXTINT[13]	—	—	—	X[13]	—	SERCOM4/ PAD[1]	—	TC4/ WO[1]	—	—	GCLK_IO[7]	—	VDDIO
27	PB14	EXTINT[14]	—	—	—	X[14]	—	SERCOM4/ PAD[2]	—	TC5/ WO[0]	—	—	GCLK_IO[0]	—	VDDIO
28	PB15	EXTINT[15]	—	—	—	X[15]	—	SERCOM4/ PAD[3]	—	TC5/ WO[1]	—	—	GCLK_IO[1]	—	VDDIO

© 2025 Microchip Technology Inc. and its subsidiaries

Table 4-2. 64-pin VQFN/64-pin TQFP Pinout (continued)

Pin	MUXEN = 0	MUXEN = 1													Supply
		PMUX Values													
		00	01					02	03	04	05	06	07		
	Port	EIC	REF	ADC	AC	PTC	DAC	SERCOM	SERCOM-ALT	TC	TC-ALT	COM	AC / GCLK	SYSCTRL	
29	PA12	EXTINT[12]	—	—	—	—	—	SERCOM2/ PAD[0]	SERCOM4/ PAD[0]	TC2/ WO[0]	—	—	AC/CMP[0]	—	VDDIO
30	PA13	EXTINT[13]	—	—	—	—	—	SERCOM2/ PAD[1]	SERCOM4/ PAD[1]	TC2/ WO[1]	—	—	AC/CMP[1]	—	VDDIO
31	PA14	EXTINT[14]	—	—	—	—	—	SERCOM2/ PAD[2]	SERCOM4/ PAD[2]	TC3/ WO[0]	—	—	GCLK_IO[0]	XIN	VDDIO
32	PA15	EXTINT[15]	—	—	—	—	—	SERCOM2/ PAD[3]	SERCOM4/ PAD[3]	TC3/ WO[1]	—	—	GCLK_IO[1]	XOUT	VDDIO
33	GND	—	—	—	—	—	—	—	—	—	—	—	—	—	—
34	VDDIO	—	—	—	—	—	—	—	—	—	—	—	—	—	—
35	PA16	EXTINT[0]	—	—	—	X[4]	—	SERCOM1/ PAD[0]	SERCOM3/ PAD[0]	—	TC2/ WO[0]	—	GCLK_IO[2]	—	VDDIO
36	PA17	EXTINT[1]	—	—	—	X[5]	—	SERCOM1/ PAD[1]	SERCOM3/ PAD[1]	—	TC2/ WO[1]	—	GCLK_IO[3]	—	VDDIO
37	PA18	EXTINT[2]	—	—	—	X[6]	—	SERCOM1/ PAD[2]	SERCOM3/ PAD[2]	—	TC3/ WO[0]	—	AC/CMP[0]	—	VDDIO
38	PA19	EXTINT[3]	—	—	—	X[7]	—	SERCOM1/ PAD[3]	SERCOM3/ PAD[3]	—	TC3/ WO[1]	—	AC/CMP[1]	—	VDDIO
39	PB16	EXTINT[0]	—	—	—	—	—	SERCOM5/ PAD[0]	—	TC6/ WO[0]	—	—	GCLK_IO[2]	—	VDDIO
40	PB17	EXTINT[1]	—	—	—	—	—	SERCOM5/ PAD[1]	—	TC6/ WO[1]	—	—	GCLK_IO[3]	—	VDDIO
41	PA20	EXTINT[4]	—	—	—	X[8]	—	SERCOM5/ PAD[2]	SERCOM3/ PAD[2]	TC7/ WO[0]	—	—	GCLK_IO[4]	—	VDDIO
42	PA21	EXTINT[5]	—	—	—	X[9]	—	SERCOM5/ PAD[3]	SERCOM3/ PAD[3]	TC7/ WO[1]	—	—	GCLK_IO[5]	—	VDDIO
43	PA22	EXTINT[6]	—	—	—	X[10]	—	SERCOM3/ PAD[0]	SERCOM5/ PAD[0]	—	TC4/ WO[0]	—	GCLK_IO[6]	—	VDDIO
44	PA23	EXTINT[7]	—	—	—	X[11]	—	SERCOM3/ PAD[1]	SERCOM5/ PAD[1]	—	TC4/ WO[1]	—	GCLK_IO[7]	—	VDDIO
45	PA24	EXTINT[12]	—	—	—	—	—	SERCOM3/ PAD[2]	SERCOM5/ PAD[2]	—	TC5/ WO[0]	—	—	—	VDDIO
46	PA25	EXTINT[13]	—	—	—	—	—	SERCOM3/ PAD[3]	SERCOM5/ PAD[3]	—	TC5/ WO[1]	—	—	—	VDDIO
47	GND	—	—	—	—	—	—	—	—	—	—	—	—	—	—
48	VDDIO	—	—	—	—	—	—	—	—	—	—	—	—	—	—
49	PB22	EXTINT[6]	—	—	—	—	—	—	SERCOM5/ PAD[2]	—	TC7/ WO[0]	—	GCLK_IO[0]	—	VDDIO
50	PB23	EXTINT[7]	—	—	—	—	—	—	SERCOM5/ PAD[3]	—	TC7/ WO[1]	—	GCLK_IO[1]	—	VDDIO
51	PA27	EXTINT[15]	—	—	—	—	—	—	—	—	—	—	GCLK_IO[0]	—	VDDIO
52	$\overline{\text{RESET}}$	—	—	—	—	—	—	—	—	—	—	—	—	—	—
53	PA28	EXTINT[8]	—	—	—	—	—	—	—	—	—	—	GCLK_IO[0]	—	VDDIO
54	GND	—	—	—	—	—	—	—	—	—	—	—	—	—	—
55	VDDCORE	—	—	—	—	—	—	—	—	—	—	—	—	—	—
56	VDDIN	—	—	—	—	—	—	—	—	—	—	—	—	—	—
57	PA30	EXTINT[10]	—	—	—	—	—	—	SERCOM1/ PAD[2]	—	TC1/ WO[0]	SWCLK	GCLK_IO[0]	—	VDDIO
58	PA31	EXTINT[11]	—	—	—	—	—	—	SERCOM1/ PAD[3]	—	TC1/ WO[1]	SWDIO	—	—	VDDIO

© 2025 Microchip Technology Inc. and its subsidiaries

Table 4-2. 64-pin VQFN/64-pin TQFP Pinout (continued)

Pin	MUXEN = 0	MUXEN = 1													Supply
		PMUX Values													
		00	01					02	03	04	05	06	07		
	Port	EIC	REF	ADC	AC	PTC	DAC	SERCOM	SERCOM-ALT	TC	TC-ALT	COM	AC / GCLK	SYSCTRL	
59	PB30	EXTINT[14]	—	—	—	—	—	—	SERCOM5/ PAD[0]	—	TC0/ WO[0]	—	—	—	VDDIO
60	PB31	EXTINT[15]	—	—	—	—	—	—	SERCOM5/ PAD[1]	—	TC0/ WO[1]	—	—	—	VDDIO
61	PB00	EXTINT[0]	—	AIN[8]	—	Y[6]	—	—	SERCOM5/ PAD[2]	—	TC7/ WO[0]	—	—	—	AVDD
62	PB01	EXTINT[1]	—	AIN[9]	—	Y[7]	—	—	SERCOM5/ PAD[3]	—	TC7/ WO[1]	—	—	—	AVDD
63	PB02	EXTINT[2]	—	AIN[10]	—	Y[8]	—	—	SERCOM5/ PAD[0]	—	TC6/ WO[0]	—	—	—	AVDD
64	PB03	EXTINT[3]	—	AIN[11]	—	Y[9]	—	—	SERCOM5/ PAD[1]	—	TC6/ WO[1]	—	—	—	AVDD

Notes:

1. SERCOM4/SERCOM5 are not available on the VQFN32/TQFP32 packages.
2. All analog pin functions are on the peripheral function 03. The peripheral function 03 must be selected to disable the digital control of the pin.
3. Only some pins can be used in SERCOM I²C mode. Refer to the *Type column* for using a SERCOM pin in I²C mode. Refer to the *Electrical Characteristics* chapter for details on the I²C pin characteristics.
4. TC6 and TC7 are not supported on the PIC32CM[3204/1602]GV032 (32-pin) and PIC32CM[3204/1602]GV048 (48-pin) devices. Refer to the Configuration Summary for details.
5. The SWDIO function is only activated in the presence of a debugger.

© 2025 Microchip Technology Inc. and its subsidiaries

4.2. 48-pin VQFN/48-pin TQFP Pinout and Multiplexing

	48-pin VQFN Top View	48-pin TQFP Top View
PIC32CM3204GV00048 PIC32CM1602GV00048	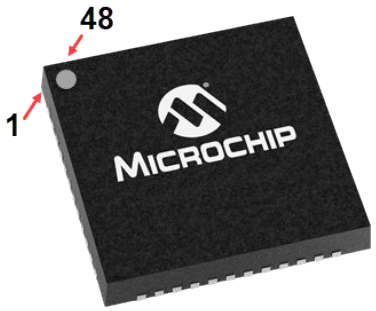	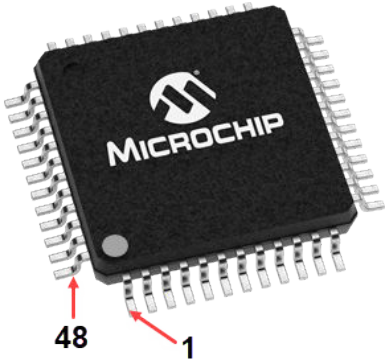

© 2025 Microchip Technology Inc. and its subsidiaries

Table 4-3. 48-pin VQFN/48-pin TQFP Pinout

Pin	MUXEN = 0	MUXEN = 1													Supply
		PMUX Values													
		00	01					02	03	04	05	06	07		
	Port	EIC	REF	ADC	AC	PTC	DAC	SERCOM	SERCOM-ALT	TC	TC-ALT	COM	AC / GCLK	SYSCTRL	
1	PA00	EXTINT[0]	—	—	—	—	—	—	SERCOM1/ PAD[0]	—	TC2/ WO[0]	—	—	XIN32	AVDD
2	PA01	EXTINT[1]	—	—	—	—	—	—	SERCOM1/ PAD[1]	—	TC2/ WO[1]	—	—	XOUT32	AVDD
3	PA02	EXTINT[2]	—	AIN[0]	—	Y[0]	VOUT	—	—	—	—	—	—	—	AVDD
4	PA03	EXTINT[3]	ADC/ VREFA DAC/ VREFA	AIN[1]	—	Y[1]	—	—	—	—	—	—	—	—	AVDD
5	AGND	—	—	—	—	—	—	—	—	—	—	—	—	—	—
6	AVDD	—	—	—	—	—	—	—	—	—	—	—	—	—	—
7	PB08	EXTINT[8]	—	AIN[2]	—	Y[14]	—	—	SERCOM4/ PAD[0]	—	TC4/ WO[0]	—	—	—	AVDD
8	PB09	EXTINT[9]	—	AIN[3]	—	Y[15]	—	—	SERCOM4/ PAD[1]	—	TC4/ WO[1]	—	—	—	AVDD
9	PA04	EXTINT[4]	ADC/ VREFB	AIN[4]	AIN[0]	Y[2]	—	—	SERCOM0/ PAD[0]	—	TC0/ WO[0]	—	—	—	AVDD
10	PA05	EXTINT[5]	—	AIN[5]	AIN[1]	Y[3]	—	—	SERCOM0/ PAD[1]	—	TC0/ WO[1]	—	—	—	AVDD
11	PA06	EXTINT[6]	—	AIN[6]	AIN[2]	Y[4]	—	—	SERCOM0/ PAD[2]	—	TC1/ WO[0]	—	—	—	AVDD
12	PA07	EXTINT[7]	—	AIN[7]	AIN[3]	Y[5]	—	—	SERCOM0/ PAD[3]	—	TC1/ WO[1]	—	—	—	AVDD
13	PA08	NMI	—	AIN[16]	—	X[0]	—	SERCOM0/ PAD[0]	SERCOM2/ PAD[0]	TC0/ WO[0]	—	—	—	—	VDDIO
14	PA09	EXTINT[9]	—	AIN[17]	—	X[1]	—	SERCOM0/ PAD[1]	SERCOM2/ PAD[1]	TC0/ WO[1]	—	—	—	—	VDDIO
15	PA10	EXTINT[10]	—	AIN[18]	—	X[2]	—	SERCOM0/ PAD[2]	SERCOM2/ PAD[2]	TC1/ WO[0]	—	—	GCLK_IO[4]	—	VDDIO
16	PA11	EXTINT[11]	—	AIN[19]	—	X[3]	—	SERCOM0/ PAD[3]	SERCOM2/ PAD[3]	TC1/ WO[1]	—	—	GCLK_IO[5]	—	VDDIO
17	VDDIO	—	—	—	—	—	—	—	—	—	—	—	—	—	—
18	GND	—	—	—	—	—	—	—	—	—	—	—	—	—	—
19	PB10	EXTINT[10]	—	—	—	—	—	—	SERCOM4/ PAD[2]	—	TC5/ WO[0]	—	GCLK_IO[4]	—	VDDIO
20	PB11	EXTINT[11]	—	—	—	—	—	—	SERCOM4/ PAD[3]	—	TC5/ WO[1]	—	GCLK_IO[5]	—	VDDIO
21	PA12	EXTINT[12]	—	—	—	—	—	SERCOM2/ PAD[0]	SERCOM4/ PAD[0]	TC2/ WO[0]	—	—	AC/CMP[0]	—	VDDIO
22	PA13	EXTINT[13]	—	—	—	—	—	SERCOM2/ PAD[1]	SERCOM4/ PAD[1]	TC2/ WO[1]	—	—	AC/CMP[1]	—	VDDIO
23	PA14	EXTINT[14]	—	—	—	—	—	SERCOM2/ PAD[2]	SERCOM4/ PAD[2]	TC3/ WO[0]	—	—	GCLK_IO[0]	XIN	VDDIO
24	PA15	EXTINT[15]	—	—	—	—	—	SERCOM2/ PAD[3]	SERCOM4/ PAD[3]	TC3/ WO[1]	—	—	GCLK_IO[1]	XOUT	VDDIO
25	PA16	EXTINT[0]	—	—	—	X[4]	—	SERCOM1/ PAD[0]	SERCOM3/ PAD[0]	—	TC2/ WO[0]	—	GCLK_IO[2]	—	VDDIO
26	PA17	EXTINT[1]	—	—	—	X[5]	—	SERCOM1/ PAD[1]	SERCOM3/ PAD[1]	—	TC2/ WO[1]	—	GCLK_IO[3]	—	VDDIO
27	PA18	EXTINT[2]	—	—	—	X[6]	—	SERCOM1/ PAD[2]	SERCOM3/ PAD[2]	—	TC3/ WO[0]	—	AC/CMP[0]	—	VDDIO

© 2025 Microchip Technology Inc. and its subsidiaries

Table 4-3. 48-pin VQFN/48-pin TQFP Pinout (continued)

Pin	MUXEN = 0	MUXEN = 1													Supply
		PMUX Values													
		00	01					02	03	04	05	06	07		
	Port	EIC	REF	ADC	AC	PTC	DAC	SERCOM	SERCOM-ALT	TC	TC-ALT	COM	AC / GCLK	SYSCTRL	
28	PA19	EXTINT[3]	—	—	—	X[7]	—	SERCOM1/ PAD[3]	SERCOM3/ PAD[3]	—	TC3/ WO[1]	—	AC/CMP[1]	—	VDDIO
29	PA20	EXTINT[4]	—	—	—	X[8]	—	SERCOM5/ PAD[2]	SERCOM3/ PAD[2]	—	—	—	GCLK_IO[4]	—	VDDIO
30	PA21	EXTINT[5]	—	—	—	X[9]	—	SERCOM5/ PAD[3]	SERCOM3/ PAD[3]	—	—	—	GCLK_IO[5]	—	VDDIO
31	PA22	EXTINT[6]	—	—	—	X[10]	—	SERCOM3/ PAD[0]	SERCOM5/ PAD[0]	—	TC4/ WO[0]	—	GCLK_IO[6]	—	VDDIO
32	PA23	EXTINT[7]	—	—	—	X[11]	—	SERCOM3/ PAD[1]	SERCOM5/ PAD[1]	—	TC4/ WO[1]	—	GCLK_IO[7]	—	VDDIO
33	PA24	EXTINT[12]	—	—	—	—	—	SERCOM3/ PAD[2]	SERCOM5/ PAD[2]	—	TC5/ WO[0]	—	—	—	VDDIO
34	PA25	EXTINT[13]	—	—	—	—	—	SERCOM3/ PAD[3]	SERCOM5/ PAD[3]	—	TC5/ WO[1]	—	—	—	VDDIO
35	GND	—	—	—	—	—	—	—	—	—	—	—	—	—	—
36	VDDIO	—	—	—	—	—	—	—	—	—	—	—	—	—	—
37	PB22	EXTINT[6]	—	—	—	—	—	—	SERCOM5/ PAD[2]	—	—	—	GCLK_IO[0]	—	VDDIO
38	PB23	EXTINT[7]	—	—	—	—	—	—	SERCOM5/ PAD[3]	—	—	—	GCLK_IO[1]	—	VDDIO
39	PA27	EXTINT[15]	—	—	—	—	—	—	—	—	—	—	GCLK_IO[0]	—	VDDIO
40	$\overline{\text{RESET}}$	—	—	—	—	—	—	—	—	—	—	—	—	—	—
41	PA28	EXTINT[8]	—	—	—	—	—	—	—	—	—	—	GCLK_IO[0]	—	VDDIO
42	GND	—	—	—	—	—	—	—	—	—	—	—	—	—	—
43	VDDCORE	—	—	—	—	—	—	—	—	—	—	—	—	—	—
44	VDDIN	—	—	—	—	—	—	—	—	—	—	—	—	—	—
45	PA30	EXTINT[10]	—	—	—	—	—	—	SERCOM1/ PAD[2]	—	TC1/ WO[0]	SWCLK	GCLK_IO[0]	—	VDDIO
46	PA31	EXTINT[11]	—	—	—	—	—	—	SERCOM1/ PAD[3]	—	TC1/ WO[1]	SWDIO	—	—	VDDIO
47	PB02	EXTINT[2]	—	AIN[10]	—	Y[8]	—	—	SERCOM5/ PAD[0]	—	—	—	—	—	AVDD
48	PB03	EXTINT[3]	—	AIN[11]	—	Y[9]	—	—	SERCOM5/ PAD[1]	—	—	—	—	—	AVDD

Notes:

1. SERCOM4/SERCOM5 are not available on the VQFN32/TQFP32 packages.
2. All analog pin functions are on the peripheral function 03. The peripheral function 03 must be selected to disable the digital control of the pin.
3. Only some pins can be used in SERCOM I²C mode. Refer to the Type column for using a SERCOM pin in I²C mode. Refer to the *Electrical Characteristics* chapter for details on the I²C pin characteristics.
4. TC6 and TC7 are not supported on the PIC32CM[3204/1602]GV032 (32-pin) and PIC32CM[3204/1602]GV048 (48-pin) devices. Refer to the Configuration Summary for details.
5. The SWDIO function is only activated in the presence of a debugger.

© 2025 Microchip Technology Inc. and its subsidiaries

4.3. 32-pin VQFN/32-pin TQFP Pinout and Multiplexing

	32-pin VQFN Top View	32-pin TQFP Top View
PIC32CM3204GV00032 PIC32CM1602GV00032	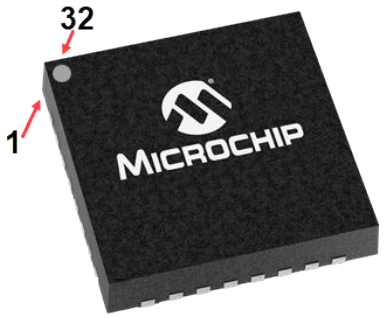	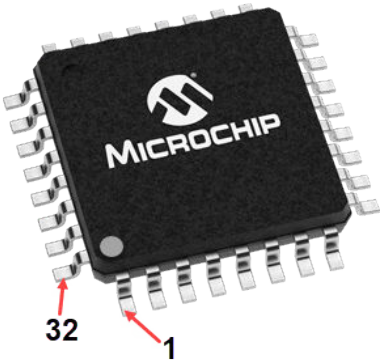

© 2025 Microchip Technology Inc. and its subsidiaries

Table 4-4. 32-pin VQFN/32-pin TQFP Pinout

Pin	MUXEN = 0	MUXEN = 1													Supply
		PMUX Values													
		00	01					02	03	04	05	06	07		
	Port	EIC	REF	ADC	PTC	DAC	AC	SERCOM	SERCOM-ALT	TC	TC-ALT	COM	AC / GCLK	SYSCTRL	
1	PA00	EXTINT[0]	—	—	—	—	—	—	SERCOM1/ PAD[0]	—	TC2/ WO[0]	—	—	XIN32	AVDD
2	PA01	EXTINT[1]	—	—	—	—	—	—	SERCOM1/ PAD[1]	—	TC2/ WO[1]	—	—	XOUT32	AVDD
3	PA02	EXTINT[2]	—	AIN[0]	Y[0]	VOUT	—	—	—	—	—	—	—	—	AVDD
4	PA03	EXTINT[3]	ADC/ VREFA DAC/ VREFA	AIN[1]	Y[1]	—	—	—	—	—	—	—	—	—	AVDD
5	PA04	EXTINT[4]	ADC/ VREFB	AIN[4]	Y[2]	—	AIN[0]	—	SERCOM0/ PAD[0]	—	TC0/ WO[0]	—	—	—	AVDD
6	PA05	EXTINT[5]	—	AIN[5]	Y[3]	—	AIN[1]	—	SERCOM0/ PAD[1]	—	TC0/ WO[1]	—	—	—	AVDD
7	PA06	EXTINT[6]	—	AIN[6]	Y[4]	—	AIN[2]	—	SERCOM0/ PAD[2]	—	TC1/ WO[0]	—	—	—	AVDD
8	PA07	EXTINT[7]	—	AIN[7]	Y[5]	—	AIN[3]	—	SERCOM0/ PAD[3]	—	TC1/ WO[1]	—	—	—	AVDD
9	AVDD	—	—	—	—	—	—	—	—	—	—	—	—	—	—
10	GND	—	—	—	—	—	—	—	—	—	—	—	—	—	—
11	PA08	NMI	—	AIN[16]	X[0]	—	—	SERCOM0/ PAD[0]	SERCOM2/ PAD[0]	TC0/ WO[0]	—	—	—	—	VDDIO
12	PA09	EXTINT[9]	—	AIN[17]	X[1]	—	—	SERCOM0/ PAD[1]	SERCOM2/ PAD[1]	TC0/ WO[1]	—	—	—	—	VDDIO
13	PA10	EXTINT[10]	—	AIN[18]	X[2]	—	—	SERCOM0/ PAD[2]	SERCOM2/ PAD[2]	TC1/ WO[0]	—	—	GCLK_IO[4]	—	VDDIO
14	PA11	EXTINT[11]	—	AIN[19]	X[3]	—	—	SERCOM0/ PAD[3]	SERCOM2/ PAD[3]	TC1/ WO[1]	—	—	GCLK_IO[5]	—	VDDIO
15	PA14	EXTINT[14]	—	—	—	—	—	SERCOM2/ PAD[2]	—	TC3/ WO[0]	—	—	GCLK_IO[0]	XIN	VDDIO
16	PA15	EXTINT[15]	—	—	—	—	—	SERCOM2/ PAD[3]	—	TC3/ WO[1]	—	—	GCLK_IO[1]	XOUT	VDDIO
17	PA16	EXTINT[0]	—	—	X[4]	—	—	SERCOM1/ PAD[0]	SERCOM3/ PAD[0]	—	TC2/ WO[0]	—	GCLK_IO[2]	—	VDDIO
18	PA17	EXTINT[1]	—	—	X[5]	—	—	SERCOM1/ PAD[1]	SERCOM3/ PAD[1]	—	TC2/ WO[1]	—	GCLK_IO[3]	—	VDDIO
19	PA18	EXTINT[2]	—	—	X[6]	—	—	SERCOM1/ PAD[2]	SERCOM3/ PAD[2]	—	TC3/ WO[0]	—	AC/CMP[0]	—	VDDIO
20	PA19	EXTINT[3]	—	—	X[7]	—	—	SERCOM1/ PAD[3]	SERCOM3/ PAD[3]	—	TC3/ WO[1]	—	AC/CMP[1]	—	VDDIO
21	PA22	EXTINT[6]	—	—	X[10]	—	—	SERCOM3/ PAD[0]	—	—	TC4/ WO[0]	—	GCLK_IO[6]	—	VDDIO
22	PA23	EXTINT[7]	—	—	X[11]	—	—	SERCOM3/ PAD[1]	—	—	TC4/ WO[1]	—	GCLK_IO[7]	—	VDDIO
23	PA24	EXTINT[12]	—	—	—	—	—	SERCOM3/ PAD[2]	—	—	TC5/ WO[0]	—	—	—	VDDIO
24	PA25	EXTINT[13]	—	—	—	—	—	SERCOM3/ PAD[3]	—	—	TC5/ WO[1]	—	—	—	VDDIO
25	PA27	EXTINT[15]	—	—	—	—	—	—	—	—	—	—	GCLK_IO[0]	—	VDDIO
26	$\overline{\text{RESET}}$	—	—	—	—	—	—	—	—	—	—	—	—	—	—
27	PA28	EXTINT[8]	—	—	—	—	—	—	—	—	—	—	GCLK_IO[0]	—	VDDIO
28	GND	—	—	—	—	—	—	—	—	—	—	—	—	—	—

© 2025 Microchip Technology Inc. and its subsidiaries

Table 4-4. 32-pin VQFN/32-pin TQFP Pinout (continued)

Pin	MUXEN = 0	MUXEN = 1													Supply
		PMUX Values													
		00	01					02	03	04	05	06	07		
	Port	EIC	REF	ADC	PTC	DAC	AC	SERCOM	SERCOM-ALT	TC	TC-ALT	COM	AC / GCLK	SYSCTRL	
29	VDDCORE	—	—	—	—	—	—	—	—	—	—	—	—	—	—
30	VDDIN	—	—	—	—	—	—	—	—	—	—	—	—	—	—
31	PA30	EXTINT[10]	—	—	—	—	—	—	SERCOM1/ PAD[2]	—	TC1/ WO[0]	SWCLK	GCLK_IO[0]	—	VDDIO
32	PA31	EXTINT[11]	—	—	—	—	—	—	SERCOM1/ PAD[3]	—	TC1/ WO[1]	SWDIO	—	—	VDDIO

Notes:

1. SERCOM4/SERCOM5 are not available on the VQFN32/TQFP32 packages.
2. All analog pin functions are on the peripheral function 03. The peripheral function 03 must be selected to disable the digital control of the pin.
3. Only some pins can be used in SERCOM I²C mode. Refer to the Type column for using a SERCOM pin in I²C mode. Refer to the *Electrical Characteristics* chapter for details on the I²C pin characteristics.
4. TC6 and TC7 are not supported on the PIC32CM[3204/1602]GV032 (32-pin) and PIC32CM[3204/1602]GV048 (48-pin) devices. Refer to the Configuration Summary for details.
5. The SWDIO function is only activated in the presence of a debugger.

© 2025 Microchip Technology Inc. and its subsidiaries

4.3.1. Other Functions

4.3.1.1. Oscillator Pinout

The oscillators are not mapped to the normal PORT functions and their multiplexing are controlled by registers in the System Controller (SYSCTRL).

Table 4-5. Oscillator Pinout

Oscillator	Supply	Signal	I/O pin
XOSC	VDDIO	XIN	PA14
		XOUT	PA15
XOSC32K	VDDANA	XIN32	PA00
		XOUT32	PA01

4.3.1.2. Serial Wire Debug Interface Pinout

Only the SWCLK pin is mapped to the normal PORT functions. A debugger cold-plugging or hot-plugging detection will automatically switch the SWDIO port to the SWDIO function.

Table 4-6. Serial Wire Debug Interface Pinout

Signal	Supply	I/O pin
SWCLK	VDDIO	PA30
SWDIO	VDDIO	PA31

© 2025 Microchip Technology Inc. and its subsidiaries

5. Signal Description

Table 5-1. ADC Pinout I/O Descriptions (Peripheral Function B)

PIN NAME	PIN NUMBER			PIN TYPE	FUNCTION TYPE	DESCRIPTION
	32-pin	48-pin	64-pin			
ADC0_AIN0	3	3	3	I	Analog	ADC module 0 analog inputs
ADC0_AIN1	4	4	4	I	Analog	
ADC0_AIN2	---	7	11	I	Analog	
ADC0_AIN3	---	8	12	I	Analog	
ADC0_AIN4	5	9	13	I	Analog	
ADC0_AIN5	6	10	14	I	Analog	
ADC0_AIN6	7	11	15	I	Analog	
ADC0_AIN7	8	12	16	I	Analog	
ADC0_AIN8	---	---	61	I	Analog	
ADC0_AIN9	---	---	62	I	Analog	
ADC0_AIN10	---	47	63	I	Analog	
ADC0_AIN11	---	48	64	I	Analog	
ADC0_AIN12	---	---	5	I	Analog	
ADC0_AIN13	---	---	6	I	Analog	
ADC0_AIN14	---	---	9	I	Analog	
ADC0_AIN15	---	---	10	I	Analog	
ADC0_AIN16	11	13	17	I	Analog	
ADC0_AIN17	12	14	18	I	Analog	
ADC0_AIN18	13	15	19	I	Analog	
ADC0_AIN19	14	16	20	I	Analog	

Table 5-2. Analog Comparator Pinout Descriptions (Peripheral Function B/H)

PIN NAME	PIN NUMBER			PIN TYPE	FUNCTION TYPE	DESCRIPTION
	32-pin	48-pin	64-pin			
AC_AIN0	5	9	13	I	Analog	Comparator 0 and 1 external analog inputs
AC_AIN1	6	10	14	I	Analog	
AC_AIN2	7	11	15	I	Analog	
AC_AIN3	8	12	16	I	Analog	
AC_CMP0	19	21 / 27	29 / 37	O	CMOS	Comparator 0 Output
AC_CMP1	20	22 / 28	30 / 38	O	CMOS	Comparator 1 Output

© 2025 Microchip Technology Inc. and its subsidiaries

Table 5-3. Generic Clock Pinout I/O Descriptions (Peripheral Function H)

PIN NAME	PIN NUMBER			PIN TYPE	FUNCTION TYPE	DESCRIPTION
	32-pin	48-pin	64-pin			
GCLK_IO[0]	15 / 25 / 27 / 31	23 / 37 / 39 / 41 / 45	27 / 31 / 49 / 51 / 53 / 57	I	ST	Ext GCLK[7:0] I/O pin Input clock source
GCLK_IO[1]	16	24 / 38	28 / 32 / 50	I	ST	
GCLK_IO[2]	17	25	35 / 39	I	ST	
GCLK_IO[3]	18	26	36 / 40	I	ST	
GCLK_IO[4]	13	15 / 19 / 29	19 / 23 / 41	I	ST	
GCLK_IO[5]	14	16 / 20 / 30	20 / 24 / 42	I	ST	
GCLK_IO[6]	21	31	25 / 43	I	ST	
GCLK_IO[7]	22	32	26 / 44	I	ST	

Table 5-4. External Interrupts Pinout I/O Descriptions (Peripheral Function A)

PIN NAME	PIN NUMBER			PIN TYPE	FUNCTION TYPE	DESCRIPTION
	32-pin	48-pin	64-pin			
EIC_EXTINT[0]	1 / 17	1 / 25	1 / 35 / 39 / 61	I	ST	External Interrupt 0 input
EIC_EXTINT[1]	2 / 18	2 / 26	2 / 36 / 40 / 62	I	ST	External Interrupt 1 input
EIC_EXTINT[2]	3 / 19	3 / 27 / 47	3 / 37 / 63	I	ST	External Interrupt 2 input
EIC_EXTINT[3]	4 / 20	4 / 28 / 48	4 / 38 / 64	I	ST	External Interrupt 3 input
EIC_EXTINT[4]	5	9 / 29	5 / 13 / 41	I	ST	External Interrupt 4 input
EIC_EXTINT[5]	6	10 / 30	6 / 14 /42	I	ST	External Interrupt 5 input
EIC_EXTINT[6]	7 / 21	11 / 31 / 37	9 / 15 / 43 / 49	I	ST	External Interrupt 6 input
EIC_EXTINT[7]	8 / 22	12 / 32 / 38	10 / 16 / 44 / 50	I	ST	External Interrupt 7 input
EIC_EXTINT[8]	27	7 / 41	11 / 53	I	ST	External Interrupt 8 input
EIC_EXTINT[9]	12	8 / 14	12 / 18	I	ST	External Interrupt 9 input
EIC_EXTINT[10]	13 / 31	15 / 19 / 45	19 / 23 / 57	I	ST	External Interrupt 10 input
EIC_EXTINT[11]	14 / 32	16 / 20 / 46	20 / 24 / 58	I	ST	External Interrupt 11 input
EIC_EXTINT[12]	23	21 / 33	25 / 29 / 45	I	ST	External Interrupt 12 input
EIC_EXTINT[13]	24	22 / 34	26 / 30 /46	I	ST	External Interrupt 13 input
EIC_EXTINT[14]	15	23	27 / 31 / 59	I	ST	External Interrupt 14 input
EIC_EXTINT[15]	16 / 25	24 / 39	28 / 32 / 51 / 60	I	ST	External Interrupt 15 input

© 2025 Microchip Technology Inc. and its subsidiaries

Table 5-5. Port A and Port B Pinout I/O Descriptions

PIN NAME	PIN NUMBER			PIN TYPE	FUNCTION TYPE	DESCRIPTION
	32-pin	48-pin	64-pin			
PA00	1	1	1	I/O	ST / CMOS	I/O Port A pins
PA01	2	2	2	I/O	ST / CMOS	
PA02	3	3	3	I/O	ST / CMOS	
PA03	4	4	4	I/O	ST / CMOS	
PA04	5	9	13	I/O	ST / CMOS	
PA05	6	10	14	I/O	ST / CMOS	
PA06	7	11	15	I/O	ST / CMOS	
PA07	8	12	16	I/O	ST / CMOS	
PA08	11	13	17	I/O	ST / CMOS	
PA09	12	14	18	I/O	ST / CMOS	
PA10	13	15	19	I/O	ST / CMOS	
PA11	14	16	20	I/O	ST / CMOS	
PA12	---	21	29	I/O	ST / CMOS	
PA13	---	22	30	I/O	ST / CMOS	
PA14	15	23	31	I/O	ST / CMOS	
PA15	16	24	32	I/O	ST / CMOS	
PA16	17	25	35	I/O	ST / CMOS	I/O Port A pins
PA17	18	26	36	I/O	ST / CMOS	
PA18	19	27	37	I/O	ST / CMOS	
PA19	20	28	38	I/O	ST / CMOS	
PA20	---	29	41	I/O	ST / CMOS	
PA21	---	30	42	I/O	ST / CMOS	
PA22	21	31	43	I/O	ST / CMOS	
PA23	22	32	44	I/O	ST / CMOS	
PA24	23	33	45	I/O	ST / CMOS	
PA25	24	34	46	I/O	ST / CMOS	
PA26	---	---	---	I/O	ST / CMOS	
PA27	25	39	51	I/O	ST / CMOS	
PA28	27	41	53	I/O	ST / CMOS	
PA29	---	---	---	I/O	ST / CMOS	
PA30	31	45	57	I/O	ST / CMOS	
PA31	32	46	58	I/O	ST / CMOS	

© 2025 Microchip Technology Inc. and its subsidiaries

Table 5-5. Port A and Port B Pinout I/O Descriptions (continued)

PIN NAME	PIN NUMBER			PIN TYPE	FUNCTION TYPE	DESCRIPTION
	32-pin	48-pin	64-pin			
PB00	---	---	61	I/O	ST / CMOS	I/O Port B pins
PB01	---	---	62	I/O	ST / CMOS	
PB02	---	47	63	I/O	ST / CMOS	
PB03	---	48	64	I/O	ST / CMOS	
PB04	---	---	5	I/O	ST / CMOS	
PB05	---	---	6	I/O	ST / CMOS	
PB06	---	---	9	I/O	ST / CMOS	
PB07	---	---	10	I/O	ST / CMOS	
PB08	---	7	11	I/O	ST / CMOS	
PB09	---	8	12	I/O	ST / CMOS	
PB10	---	19	23	I/O	ST / CMOS	
PB11	---	20	24	I/O	ST / CMOS	
PB12	---	---	25	I/O	ST / CMOS	
PB13	---	---	26	I/O	ST / CMOS	
PB14	---	---	27	I/O	ST / CMOS	
PB15	---	---	28	I/O	ST / CMOS	
PB16	---	---	39	I/O	ST / CMOS	I/O Port B pins
PB17	---	---	40	I/O	ST / CMOS	
PB18	---	---	---	I/O	ST / CMOS	
PB19	---	---	---	I/O	ST / CMOS	
PB20	---	---	---	I/O	ST / CMOS	
PB21	---	---	---	I/O	ST / CMOS	
PB22	---	37	49	I/O	ST / CMOS	
PB23	---	38	50	I/O	ST / CMOS	
PB24	---	---	---	I/O	ST / CMOS	
PB25	---	---	---	I/O	ST / CMOS	
PB26	---	---	---	I/O	ST / CMOS	
PB27	---	---	---	I/O	ST / CMOS	
PB28	---	---	---	I/O	ST / CMOS	
PB29	---	---	---	I/O	ST / CMOS	
PB30	---	---	59	I/O	ST / CMOS	
PB31	---	---	60	I/O	ST / CMOS	

Table 5-6. TC0 Through TC7 Pinout I/O Descriptions (Peripheral Functions E/F)

PIN NAME	PIN NUMBER			PIN TYPE	FUNCTION TYPE	DESCRIPTION
	32-pin	48-pin	64-pin			
TC0_WO[0]	5 / 11	9 / 13	13 / 17 / 59	I/O	ST / CMOS	TC 0 Waveform Outputs
TC0_WO[1]	6 / 12	10 / 14	14 / 18 / 60	I/O	ST / CMOS	
TC1_WO[0]	7 / 13 / 31	11 / 15 / 45	15 / 19 / 57	I/O	ST / CMOS	TC 1 Waveform Outputs
TC1_WO[1]	8 / 14 / 32	12 / 16 / 46	16 / 20 / 58	I/O	ST / CMOS	
TC2_WO[0]	1 / 17	1 / 21 / 25	1 / 29 / 35	I/O	ST / CMOS	TC 2 Waveform Outputs
TC2_WO[1]	2 / 18	2 / 22 / 26	2 / 30 / 36	I/O	ST / CMOS	
TC3_WO[0]	15 / 19	23 / 27	31 / 37	I/O	ST / CMOS	TC 3 Waveform Outputs
TC3_WO[1]	16 / 20	24 / 28	32 / 38	I/O	ST / CMOS	

© 2025 Microchip Technology Inc. and its subsidiaries

Table 5-6. TC0 Through TC7 Pinout I/O Descriptions (Peripheral Functions E/F) (continued)

PIN NAME	PIN NUMBER			PIN TYPE	FUNCTION TYPE	DESCRIPTION
	32-pin	48-pin	64-pin			
TC4_WO[0]	21	7 / 31	11 / 25 / 43	I/O	ST / CMOS	TC 4 Waveform Outputs
TC4_WO[1]	22	8 / 32	12 / 26 / 44	I/O	ST / CMOS	
TC5_WO[0]	23	19 / 33	23 / 27 / 45	I/O	ST / CMOS	TC 5 Waveform Outputs
TC5_WO[1]	24	20 / 34	24 / 28 / 46	I/O	ST / CMOS	
TC6_WO[0]	—	—	39 / 63	I/O	ST / CMOS	TC 6 Waveform Outputs
TC6_WO[1]	—	—	40 / 64	I/O	ST / CMOS	
TC7_WO[0]	—	—	41 / 49 / 61	I/O	ST / CMOS	TC 7 Waveform Outputs
TC7_WO[1]	—	—	42 / 50 / 62	I/O	ST / CMOS	

Table 5-7. SERCOM0 Through SERCOM5 Pinout I/O Descriptions (Peripheral Function C/D)

PIN NAME	PIN NUMBER			PIN TYPE	FUNCTION TYPE	DESCRIPTION
	32-pin	48-pin	64-pin			
SERCOM0_PAD[0]	5 / 11	9 / 13	13 / 17	I/O	ST/CMOS	—
SERCOM0_PAD1	6 / 12	10 / 14	14 / 18	I/O	ST/CMOS	—
SERCOM0_PAD2	7 / 13	11 / 15	15 / 19	I/O	ST/CMOS	—
SERCOM0_PAD3	8 / 14	12 / 16	16 / 20	I/O	ST/CMOS	—
SERCOM1_PAD0	1 / 17	1 / 25	1 / 35	I/O	ST/CMOS	—
SERCOM1_PAD1	2 / 18	2 / 26	2 / 36	I/O	ST/CMOS	—
SERCOM1_PAD2	19 / 31	27 / 45	37 / 57	I/O	ST/CMOS	—
SERCOM1_PAD3	20 / 32	28 / 46	38 / 58	I/O	ST/CMOS	—
SERCOM2_PAD0	11	13 / 21	17 / 29	I/O	ST/CMOS	—
SERCOM2_PAD1	12	14 / 22	18 / 30	I/O	ST/CMOS	—
SERCOM2_PAD2	13 / 15	15 / 23	19 / 31	I/O	ST/CMOS	—
SERCOM2_PAD3	14 / 16	16 / 24	20 / 32	I/O	ST/CMOS	—
SERCOM3_PAD0	17 / 21	25 / 31	35 / 43	I/O	ST/CMOS	—
SERCOM3_PAD1	18 / 22	26 / 32	36 / 44	I/O	ST/CMOS	—
SERCOM3_PAD2	19 / 23	27 / 29 / 33	37 / 41 / 45	I/O	ST/CMOS	—
SERCOM3_PAD3	20 / 24	28 / 30 / 34	38 / 42 / 46	I/O	ST/CMOS	—
SERCOM4_PAD0	—	7 / 21	11 / 25 / 29	I/O	ST/CMOS	—
SERCOM4_PAD1	—	8 / 22	12 / 26 / 30	I/O	ST/CMOS	—
SERCOM4_PAD2	—	19 / 23	23 / 27 / 31	I/O	ST/CMOS	—
SERCOM4_PAD3	—	20 / 24	24 / 28 / 32	I/O	ST/CMOS	—
SERCOM5_PAD0	—	31 / 47	39 / 43 / 59 / 63	I/O	ST/CMOS	—
SERCOM5_PAD1	—	32 / 48	40 / 44 / 60 / 64	I/O	ST/CMOS	—
SERCOM5_PAD2	—	29 / 33 / 37	41 / 45 / 49 / 61	I/O	ST/CMOS	—
SERCOM5_PAD3	—	30 / 34 / 39	42 / 46 / 50 / 62	I/O	ST/CMOS	—

Table 5-8. Power, Ground, and Voltage Reference Pinout I/O Descriptions

PIN NAME	PIN NUMBER			PIN TYPE	FUNCTION TYPE	DESCRIPTION
	32-pin	48-pin	64-pin			
AVDD	9	6	8	PWR	Power	Positive supply for analog modules.
AGND		5	7	PWR	Power	Ground for analog modules.
VDDIO		17/36	21 / 34 / 48	PWR	Power	Positive supply for I/O logic

© 2025 Microchip Technology Inc. and its subsidiaries

Table 5-8. Power, Ground, and Voltage Reference Pinout I/O Descriptions (continued)

PIN NAME	PIN NUMBER			PIN TYPE	FUNCTION TYPE	DESCRIPTION
	32-pin	48-pin	64-pin			
VDDCORE	29	43	55	PWR	Power	Internal regulated voltage output. Powers the core, memories, peripherals, and DFLL48M. Voltage is 1.2V.
GND	10/28	18/35/42	22 / 33 / 47 / 54	PWR	Power	Ground for CORE, peripherals and I/O
ADC_VREFA/ DAC_VREFA	4	4	4	I	Analog	External Analog ADC and DAC Reference
ADC_VREFB	5	9	13	I	Analog	External Analog ADC Reference

Table 5-9. SW-2 Wire Programming/Debugging Pinout I/O Descriptions (Peripheral Function G)

PIN NAME	PIN NUMBER			PIN TYPE	FUNCTION TYPE	DESCRIPTION
	32-pin TFBGA	48-pin TFBGA	64-pin TFBGA			
SWCLK	31	45	57	I	ST	Debug Serial Wire Input Clock
SWDIO	32	46	58	I/O	ST/CMOS	Debug Serial Wire Data In/Out

Table 5-10. Peripheral Touch Control (PTC) Pinout I/O Descriptions (Peripheral Function B)

PIN NAME	PIN NUMBER			PIN TYPE	FUNCTION TYPE	DESCRIPTION
	32-pin	48-pin	64-pin			
Y0	3	3	3	I/O	CMOS / Analog	Y[m:0] Y-line (Analog Input/Output)
Y1	4	4	4	I/O	CMOS / Analog	
Y2	5	9	13	I/O	CMOS / Analog	
Y3	6	10	14	I/O	CMOS / Analog	
Y4	7	11	15	I/O	CMOS / Analog	
Y5	8	12	16	I/O	CMOS / Analog	
Y6	-	-	61	I/O	CMOS / Analog	
Y7	-	-	62	I/O	CMOS / Analog	
Y8	-	47	63	I/O	CMOS / Analog	
Y9	-	48	64	I/O	CMOS / Analog	
Y10	-	-	5	I/O	CMOS / Analog	
Y11	-	-	6	I/O	CMOS / Analog	
Y12	-	-	9	I/O	CMOS / Analog	
Y13	-	-	10	I/O	CMOS / Analog	
Y14	-	7	11	I/O	CMOS / Analog	
Y15	-	8	12	I/O	CMOS / Analog	

© 2025 Microchip Technology Inc. and its subsidiaries

Table 5-10. Peripheral Touch Control (PTC) Pinout I/O Descriptions (Peripheral Function B) (continued)

PIN NAME	PIN NUMBER			PIN TYPE	FUNCTION TYPE	DESCRIPTION
	32-pin	48-pin	64-pin			
X0	11	13	17	I/O	CMOS / Analog	X[n:0] X-line (DigitalOutput)
X1	12	14	18	I/O	CMOS / Analog	
X2	13	15	19	I/O	CMOS / Analog	
X3	14	16	20	I/O	CMOS / Analog	
X4	17	25	35	I/O	CMOS / Analog	
X5	18	26	36	I/O	CMOS / Analog	
X6	19	27	37	I/O	CMOS / Analog	
X7	20	28	38	I/O	CMOS / Analog	
X8	-	29	41	I/O	CMOS / Analog	
X9	-	30	42	I/O	CMOS / Analog	
X10	21	31	43	I/O	CMOS / Analog	
X11	22	32	44	I/O	CMOS / Analog	
X12	-	-	25	I/O	CMOS / Analog	
X13	-	-	26	I/O	CMOS / Analog	
X14	-	-	27	I/O	CMOS / Analog	
X15	-	-	28	I/O	CMOS / Analog	

Table 5-11. Digital-to-Analog Converter (DAC) Peripheral Function B)

PIN NAME	PIN NUMBER			PIN TYPE	FUNCTION TYPE	DESCRIPTION
	32-pin TFBGA	48-pin TFBGA	64-pin TFBGA			
VOUT	3	3	3	O	Analog output	DAC output
VREFA	4	4	4	I	Analog input	External reference

© 2025 Microchip Technology Inc. and its subsidiaries

6. Power Supply and Start-Up Considerations

6.1. Power Domain Overview

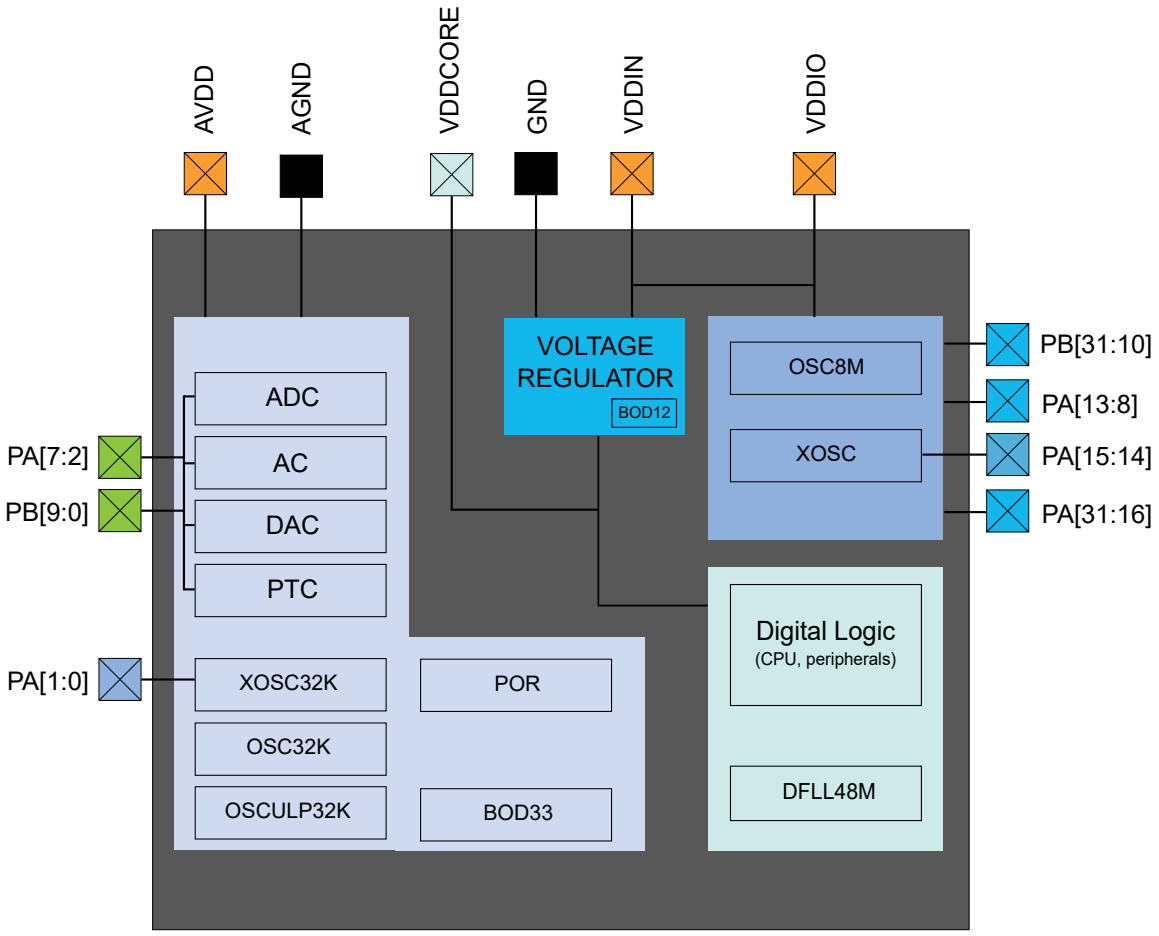

6.2. Power Supply Considerations

6.2.1. Power Supplies

The device has the following power supply pins:

- VDDIO: Powers I/O lines, OSC8M and XOSC. Voltage is 1.62V to 3.63V.
- VDDIN: Powers I/O lines and the internal regulator. Voltage is 1.62V to 3.63V.
- AVDD: Powers I/O lines and the ADC, AC, DAC, PTC, OSCULP32K, OSC32K, XOSC32K. Voltage is 1.62V to 3.63V.
- VDDCORE: Internal regulated voltage output. Powers the core, memories, peripherals, and DFLL48M. Voltage is 1.2V.

The same voltage must be applied to both VDDIN, VDDIO and AVDD. This common voltage is referred to as V_{DD} in the data sheet.

The ground pins, GND, are common to VDDCORE, VDDIO and VDDIN. The ground pin for AVDD is AGND.

For decoupling recommendations for the different power supplies. Refer to *Schematic Checklist* for details.

© 2025 Microchip Technology Inc. and its subsidiaries

6.2.2. Voltage Regulator

The voltage regulator has two different modes:

- Normal mode: To be used when the CPU and peripherals are running
- Low-Power (LP) mode: To be used when the regulator draws small static current. It can be used in Standby mode

6.2.3. Typical Powering Schematics

The device uses a single main supply with a range of 1.62V - 3.63V.

The following figure shows the recommended power supply connection.

Figure 6-1. Power Supply Connection

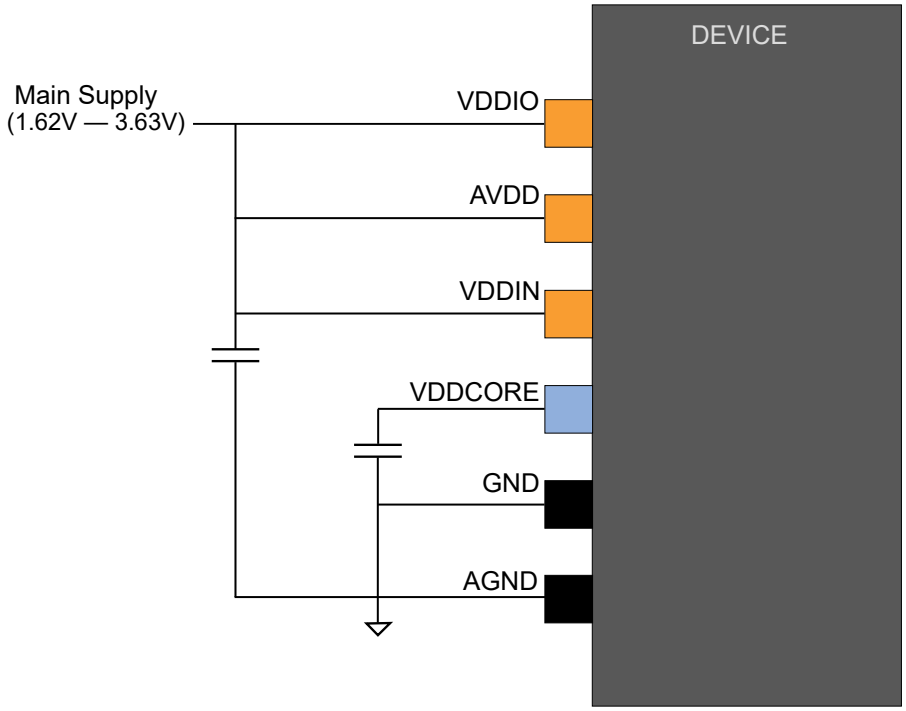

6.2.4. Power-Up Sequence

6.2.4.1. Minimum Rise Rate

The integrated Power-on Reset (POR) circuitry monitoring the AVDD power supply requires a minimum rise rate. Refer to the *Electrical Characteristics* for details.

6.2.4.2. Maximum Rise Rate

The rise rate of the power supply must not exceed the values described in Electrical Characteristics. Refer to the *Electrical Characteristics* for details.

6.3. Power-Up

This section summarizes the power-up sequence of the device. The behavior after power-up is controlled by the Power Manager. Refer to *PM – Power Manager* for details.

6.3.1. Starting of Clocks

After power-up, the device is set to its Initial state and kept in Reset until the power has stabilized throughout the device. Once the power has stabilized, the device will use a 1 MHz clock. This clock is derived from the 8 MHz Internal Oscillator (OSC8M), which is divided by eight and used as a clock

© 2025 Microchip Technology Inc. and its subsidiaries

source for generic clock generator 0. Generic clock generator 0 is the main clock for the Power Manager (PM).

Some synchronous system clocks are active, allowing software execution.

Refer to the *Clock Mask Register* section in the *PM – Power Manager* chapter for the list of default peripheral clocks running. Synchronous system clocks that are running are by default not divided and receive a 1 MHz clock through generic clock generator 0. Other generic clocks are disabled except GCLK_WDT, which is used by the Watchdog Timer (WDT).

6.3.2. I/O Pins

After power-up, the I/O pins are tri-stated.

6.3.3. Fetching of Initial Instructions

After Reset has been released, the CPU starts fetching PC and SP values from the Reset address, which is 0x00000000. This address points to the first executable address in the internal Flash. The code read from the internal Flash is free to configure the clock system and clock sources. Refer to *PM – Power Manager*, *GCLK – Generic Clock Controller*, and *SYSCTRL – System Controller* chapters for details. Refer to the "Arm Architecture Reference Manual" for more information on CPU start-up (http://www.arm.com).

6.4. Power-on Reset (POR) and Brown-out Detector (BOR)

The PIC32C embeds three features to monitor, warn, and/or reset the device:

- POR: Power-on Reset on AVDD
- BOD33: Brown-out Detector on AVDD
- BOD12: Voltage Regulator Internal Brown-out Detector on VDDCORE. The Voltage Regulator Internal BOD is calibrated in production and its calibration configuration is stored in the NVM User Row. This configuration should not be changed if the user row is written to assure the correct behavior of the BOD12.

6.4.1. Power-on Reset on AVDD

POR monitors AVDD. It is always activated and monitors voltage at start-up and also during all the Sleep modes. If AVDD goes below the threshold voltage, the entire chip is reset.

6.4.2. Brown-out Detector on AVDD

BOD33 monitors AVDD. Refer to *SYSCTRL – System Controller* for details.

6.4.3. Brown-out Detector on VDDCORE

Once the device has started up, BOD12 monitors the internal VDDCORE.

© 2025 Microchip Technology Inc. and its subsidiaries

7. Product Mapping

7.1. Embedded Memories

- Internal high-speed Flash
- Internal high-speed RAM, single-cycle access at full speed
- Dedicated Flash area for EEPROM Emulation

7.2. Physical Memory Map

The high-speed bus is implemented as a Bus Matrix. All high-speed bus addresses are fixed, and they are never remapped in any way, even during boot. The 32-bit physical address space is mapped as given in the below table.

Table 7-1. Physical Memory Map

Memory	Start Address	Size (Kbytes)	
		PIC32CM3204	PIC32CM1602
Internal Flash	0x00000000	32	16
Internal SRAM	0x20000000	4	2
Peripheral Bridge A	0x40000000	64	64
Peripheral Bridge B	0x41000000	64	64
Peripheral Bridge C	0x42000000	64	64

Table 7-2. Flash Memory Parameters

Device	Flash Size	Number of Pages	Page Size	Row Size
PIC32CM3204	32 Kbytes	512	64 bytes	4 pages = 256 bytes
PIC32CM1602	16 Kbytes	256	64 bytes	4 pages = 256 bytes

Note: The number of pages (NVMP) and page size (PSZ) can be read from the NVM Pages and Page Size bits in the NVM Parameter register in the NVMCTRL (PARAM.NVMP and PARAM.PSZ, respectively). Refer to *NVM Parameter* (PARAM) register for details.

7.3. Peripheral Bus A Address Map

Table 7-3. Peripheral Bus A Address Map

Peripheral Bus A Address Map		
Peripheral on APB	Start Address	End Address
PAC0	0x4000_0000	0x4000_03FF
PM	0x4000_0400	0x4000_07FF
SYSCTRL	0x4000_0800	0x4000_0BFF
GCLK	0x4000_0C00	0x4000_0FFF
WDT	0x4000_1000	0x4000_13FF
RTC	0x4000_1400	0x4401_17FF
EIC	0x4000_1800	0x4000_1BFF
RSVD	0x4000_1C00	0x40FF_FFFF

© 2025 Microchip Technology Inc. and its subsidiaries

7.4. Peripheral Bus B Address Map

Table 7-4. Peripheral Bus B Address Map

Peripheral Bus B Address Map		
Peripheral on APB	Start Address	End Address
PAC1	0x4100_0000	0x4100_1FFF
DSU	0x4100_2000	0x4100_3FFF
NVMCTRL	0x4100_4000	0x4100_43FF
PORT	0x4100_4400	0x4100_47FF
RSVD	0x4100_4800	0x41FF_FFFF

7.5. Peripheral Bus C Address Map

Table 7-5. Peripheral Bus C Address Map

Peripheral Bus C Address Map		
Peripheral on APB	Start Address	End Address
PAC2	0x4200_0000	0x4200_03FF
EVSYS	0x4200_0400	0x4200_07FF
SERCOM 0	0x4200_0800	0x4200_0BFF
SERCOM 1	0x4200_0C00	0x4200_0FFF
SERCOM 2	0x4200_1000	0x4200_13FF
SERCOM 3	0x4200_1400	0x4200_17FF
SERCOM 4	0x4200_1800	0x4200_1000
SERCOM 5	0x4200_1C00	0x4200_1FFF
TC 0	0x4200_2000	0x4200_23FF
TC 1	0x4200_2400	0x4200_27FF
TC 2	0x4200_2800	0x4200_0000
TC 3	0x4200_2C00	0x4200_2FFF
TC 4	0x4200_3000	0x4200_33FF
TC 5	0x4200_3400	0x4200_37FF
TC 6	0x4200_3800	0x4200_3BFF
TC 7	0x4200_3C00	0x4200_3FFF
ADC	0x4200_4000	0x4200_43FF
AC	0x4200_4400	0x4200_47FF
DAC	0x4200_4800	0x4200_4BFF
PTC	0x4200_4C00	0x4200_4FFF
RSVD	0x4200_5000	0x42FF_FFFF

7.6. NVM Calibration and Auxiliary Space

The device calibration data are stored in different sections of the NVM calibration and auxiliary space presented in the following figure.

© 2025 Microchip Technology Inc. and its subsidiaries

Figure 7-1. Calibration and Auxiliary Space

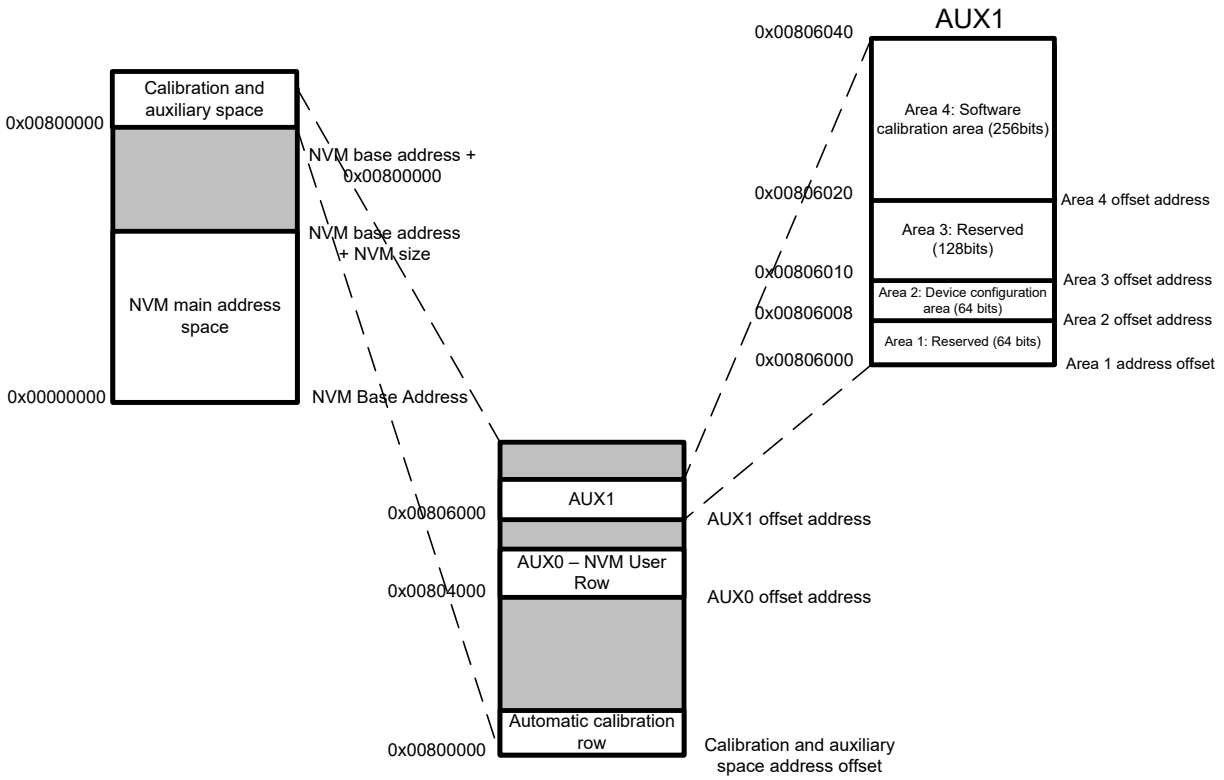

The values from the automatic calibration row are loaded into their respective registers at startup.

7.7. NVM User Row Mapping

The first two 32-bit words of the NVM User Row contain calibration data that are automatically read at device power on.

The NVM User Row can be read at address 0x804000.

To write the NVM User Row, refer to the *NVMCTRL – Non-Volatile Memory Controller*.

When writing to the user row, the values do not get loaded by other modules on the device until a device Reset occurs.

Table 7-6. NVM User Row Mapping

Bit Position	Name	Usage
2:0	BOOTPROT	Used to select one of eight different bootloader sizes. Refer to the *"NVMCTRL – Non-Volatile Memory Controller"*. Default value = 0x7.
3[(1)]	Reserved	Do not modify the value of a reserved bit. Reading a reserved bit has no significance to the user application.
6:4	EEPROM	Used to select one of eight different EEPROM Emulation sizes. Refer to *NVMCTRL – Non-Volatile Memory Controller*. Default value = 7.
7[(1)]	Reserved	Do not modify the value of a reserved bit. Reading a reserved bit has no significance to the user application.
13:8	BOD33 Level	BOD33 Threshold Level at power on. Refer to *SYSCTRL BOD33 register*. Default value = 7.
14	BOD33 Enable	BOD33 Enable at power on . Refer to *SYSCTRL BOD33 register*. Default value = 1.

© 2025 Microchip Technology Inc. and its subsidiaries

Table 7-6. NVM User Row Mapping (continued)

Bit Position	Name	Usage
16:15	BOD33 Action	BOD33 Action at power on. Refer to *SYSCTRL BOD33 register*. Default value = 1.
24:17[1]	Reserved	Do not modify the value of a reserved bit. Reading a reserved bit has no significance to the user application.
25	WDT Enable	WDT Enable at power on. Refer to *WDT CTRL register*. Default value = 0.
26	WDT Always-On	WDT Always-On at power on. Refer to *WDT CTRL register*. Default value = 0.
30:27	WDT Period	WDT Period at power on. Refer to *WDT CONFIG register*. Default value = 0x0B.
34:31	WDT Window	WDT Window mode time-out at power on. Refer to *WDT CONFIG register*. Default value = 0x0B.
38:35	WDT EWOFFSET	WDT Early Warning Interrupt Time Offset at power on. Refer to *WDT EWCTRL register*. Default value = 0xB.
39	WDT WEN	WDT Timer Window Mode Enable at power on. Refer to *WDT CTRL register*. Default value = 0.
40	BOD33 Hysteresis	BOD33 Hysteresis configuration at power on. Refer to *SYSCTRL BOD33 register*. Default value = 1.
47:41	Reserved	Do not modify the value of a reserved bit. Reading a reserved bit has no significance to the user application.
63:48	LOCK	NVM Region Lock Bits. Refer to *NVMCTRL – Non-Volatile Memory Controller*. Default value = 0xFFFF.

Note:

1. It is required to preserve the value of a reserved bit while modifying the NVM User Row bits.

7.8. NVM Software Calibration Area Mapping

The NVM Software Calibration Area contains calibration data that are measured and written during production test. These calibration values should be read by the application software and written back to the corresponding register.

The NVM Software Calibration Area can be read at address 0x806020. The NVM Software Calibration Area can not be written.

Table 7-7. NVM Software Calibration Area Mapping

Bit Position	Name	Description
26:0	Reserved	–
34:27	ADC LINEARITY	ADC Linearity Calibration. Should be written to the ADC CALIB register.
37:35	ADC BIASCAL	ADC Bias Calibration. Should be written to the ADC CALIB register.
44:38	OSC32K CAL	OSC32KCalibration. Should be written to the SYSCTRL OSC32K register.
57:45	Reserved	–
63:58	DFLL48M COARSE CAL[1]	DFLL48M Coarse calibration value, should be written to the SYSCTRL DFLLVAL register.
73:64	DFLL48M fine CAL[1]	DFLL48M Fine calibration value, should be written to the SYSCTRL.DFLLVAL register.
127:74	Reserved	–

Note: 1. Not applicable for die revision C and previous revisions.

7.9. Serial Number

Each device has a unique 128-bit serial number which is a concatenation of four 32-bit words contained at the following addresses:

© 2025 Microchip Technology Inc. and its subsidiaries

Word 0: 0x0080A00C

Word 1: 0x0080A040

Word 2: 0x0080A044

Word 3: 0x0080A048

The uniqueness of the serial number is guaranteed only when using all 128 bits.

© 2025 Microchip Technology Inc. and its subsidiaries

8. Processor And Architecture

8.1. Cortex M0+ Processor

The PIC32C implements the ARM Cortex-M0+ processor, based on the Arm v6 architecture and Thumb®-2 ISA. The Cortex M0+ is 100% instruction set compatible with its predecessor, the Cortex-M0 core, and upward compatible to Cortex-M3 and M4 cores. The Arm Cortex-M0+ implemented is revision r0p1. For additional information, refer to the www.arm.com.

8.1.1. Cortex M0+ Configuration

Table 8-1. Cortex M0+ Configuration

Features	Configurable Option	Device Configuration
Interrupts	External interrupts 0-32	28
Data Endianness	Little-endian or big-endian	Little-endian
SysTick Timer	Present or absent	Present
Number of Watchpoint Comparators	0, 1, 2	2
Number of Breakpoint Comparators	0, 1, 2, 3, 4	4
Halting Debug Support	Present or absent	Present
Multiplier	Fast or small	Fast (single cycle)
Single-Cycle I/O Port	Present or absent	Present
Wake-up Interrupt Controller	Supported or not supported	Not supported
Vector Table Offset Register	Present or absent	Present
Unprivileged/Privileged Support	Present or absent	Absent(1)
Memory Protection Unit	Not present or 8-region	Not present
Reset all Registers	Present or absent	Absent
Instruction Fetch Width	16-bit only or mostly 32-bit	32-bit

Note:

1. All software run in Privileged mode only.

The ARM Cortex-M0+ core has the following two bus interfaces:

- Single 32-bit AMBA-3 AHB-Lite system interface that provides connections to peripherals and all system memory, which includes Flash and RAM.
- Single 32-bit I/O port bus interfacing to the port with 1-cycle loads and stores.

8.1.2. Cortex-M0+ Peripherals

- System Control Space (SCS)
  - The processor provides debug through registers in the SCS. Refer to the *Cortex-M0+ Technical Reference Manual* for details (www.arm.com).
- System Timer (SysTick)
  - The system timer is a 24-bit timer clocked by CLK_CPU that extends the functionality of both the processor and the NVIC. Refer to the *Cortex-M0+ Technical Reference Manual* for details (www.arm.com).
- Nested Vectored Interrupt Controller (NVIC)
  - External interrupt signals connect to the NVIC, and the NVIC prioritizes the interrupts. Software can set the priority of each interrupt. The NVIC and the Cortex-M0+ processor core are closely coupled, providing low latency interrupt processing and efficient processing of late arriving interrupts. Refer to the *Nested Vector Interrupt Controller* and the *Cortex-M0+ Technical Reference Manual* for details (www.arm.com).

© 2025 Microchip Technology Inc. and its subsidiaries

- System Control Block (SCB)
  - The SCB provides system implementation information and system control. This includes configuration, control, and reporting of the system exceptions. Refer to the *Cortex-M0+ Devices Generic User Guide* for details (www.arm.com).

8.1.3. Cortex-M0+ Address Map

Table 8-2. Cortex-M0+ Address Map

Address	Peripheral
0xE000E000	System Control Space (SCS)
0xE000E010	System Timer (SysTick)
0xE000E100	Nested Vectored Interrupt Controller (NVIC)
0xE000ED00	System Control Block (SCB)

8.1.4. I/O Interface

8.1.4.1. Overview

Because accesses to the AMBA® AHB-Lite™ and the single cycle I/O interface can be made concurrently, the Cortex-M0+ processor can fetch the next instructions while accessing the I/Os. This enables single cycle I/O accesses to be sustained for as long as needed. Refer to *CPU Local Bus* for more information.

8.1.4.2. Description

Direct access to PORT registers.

8.2. Nested Vector Interrupt Controller

8.2.1. Overview

The Nested Vectored Interrupt Controller (NVIC) in the PIC32C supports 32 interrupt lines with four different priority levels. For more details, refer to the Cortex-M0+ Technical Reference Manual (www.arm.com).

8.2.2. Interrupt Line Mapping

Each of the 25 interrupt lines is connected to one peripheral instance, as shown in the table below. Each peripheral can have one or more interrupt flags, located in the peripheral's Interrupt Flag Status and Clear (INTFLAG) register. The Interrupt flag is set when the Interrupt condition occurs. Each interrupt in the peripheral can be individually enabled by writing a one to the corresponding bit in the peripheral's Interrupt Enable Set (INTENSET) register, and disabled by writing a one to the corresponding bit in the peripheral's Interrupt Enable Clear (INTENCLR) register. An interrupt request is generated from the peripheral when the Interrupt flag is set and the corresponding interrupt is enabled. The interrupt requests for one peripheral are ORed together on system level, generating one interrupt request for each peripheral. An interrupt request will set the corresponding Interrupt Pending bit in the NVIC Interrupt Pending registers (SETPEND/CLRPEND bits in ISPR/ICPR). For the NVIC to activate the interrupt, it must be enabled in the NVIC interrupt enable register (SETENA/CLRENA bits in ISER/ICER). The NVIC Interrupt Priority registers IPR0-IPR7 provide a priority field for each interrupt.

Peripheral Source	NVIC Line
EIC NMI – External Interrupt Controller	NMI
PM – Power Manager	0
SYSCTRL – System Control	1
WDT – Watchdog Timer	2
RTC – Real-Time Counter	3

© 2025 Microchip Technology Inc. and its subsidiaries

Interrupt Line Mapping (continued)	
Peripheral Source	**NVIC Line**
EIC – External Interrupt Controller	4
NVMCTRL – Nonvolatile Memory Controller	5
EVSYS – Event System	6
SERCOM0 – Serial Communication Interface 0	7
SERCOM1 – Serial Communication Interface 1	8
SERCOM2 – Serial Communication Interface 2	9
SERCOM3 – Serial Communication Interface 3	10
SERCOM4 – Serial Communication Interface 4	11
SERCOM5 – Serial Communication Interface 5	12
TC0 – Timer Counter 0	13
TC1 – Timer Counter 1	14
TC2 – Timer Counter 2	15
TC3 – Timer Counter 3	16
TC4 – Timer Counter 4	17
TC5 – Timer Counter 5	18
TC6 – Timer Counter 6	19
TC7 – Timer Counter 7	20
ADC – Analog-to-Digital Converter	21
AC – Analog Comparator	22
DAC – Digital-to-Analog Converter	23
PTC – Peripheral Touch Controller	24

8.3. High-Speed Bus System

8.3.1. Features

High-Speed Bus Matrix has the following features:

- Symmetric crossbar bus switch implementation
- Allows concurrent accesses from different hosts to different clients
- 32-bit data bus
- Operation at a one-to-one clock frequency with the bus hosts

© 2025 Microchip Technology Inc. and its subsidiaries

8.3.2. Configuration

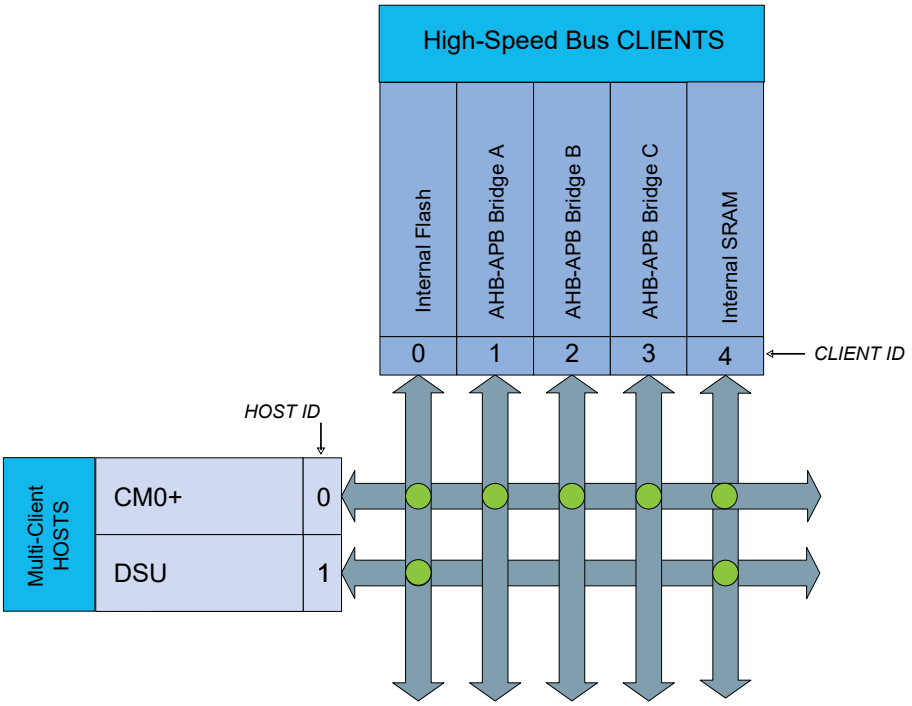

Table 8-3. Bus Matrix Hosts

Bus Matrix Hosts	Host ID
CM0+ - Cortex M0+ Processor	0
DSU - Device Service Unit	1

Table 8-4. Bus Matrix Clients

Bus Matrix Clients	Client ID
Internal Flash Memory	0
AHB-APB Bridge A	1
AHB-APB Bridge B	2
AHB-APB Bridge C	3
Internal SRAM	4

Table 8-5. SRAM Port Connection

SRAM Port Connection	Port ID	Connection Type
CM0+ - Cortex M0+ Processor	4	Bus Matrix
DSU - Device Service Unit	6	Bus Matrix

8.4. AHB-APB Bridge

The AHB-APB bridge is an AHB Client, providing an interface between the high-speed AHB domain and the low-power APB domain. It is used to provide access to the programmable control registers of peripherals (see *Product Mapping*).

© 2025 Microchip Technology Inc. and its subsidiaries

AHB-APB bridge is based on AMBA APB Protocol Specification V2.0 (ref. as APB4) including:

- Wait state support
- Error reporting
- Transaction protection
- Sparse data transfer (byte, half-word and word)

Additional enhancements:

- Address and data cycles merged into a single cycle
- Sparse data transfer also apply to read access

to operate the AHB-APB bridge, the clock (CLK_HPBx_AHB) must be enabled. See *PM – Power Manager* for details.

Figure 8-1. APB Write Access.

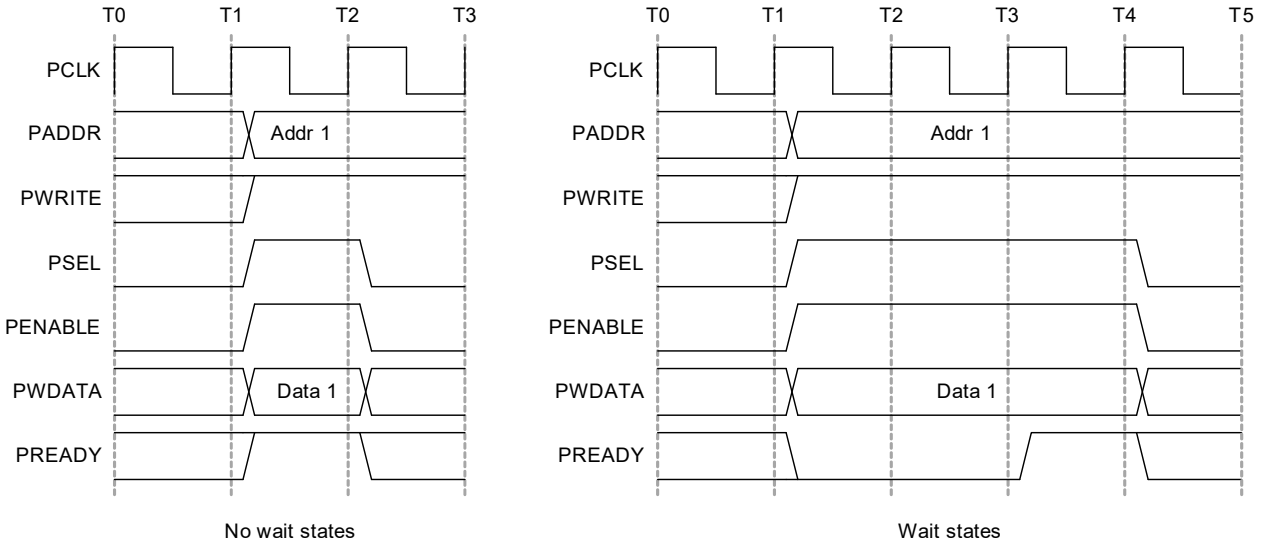

Figure 8-2. APB Read Access.

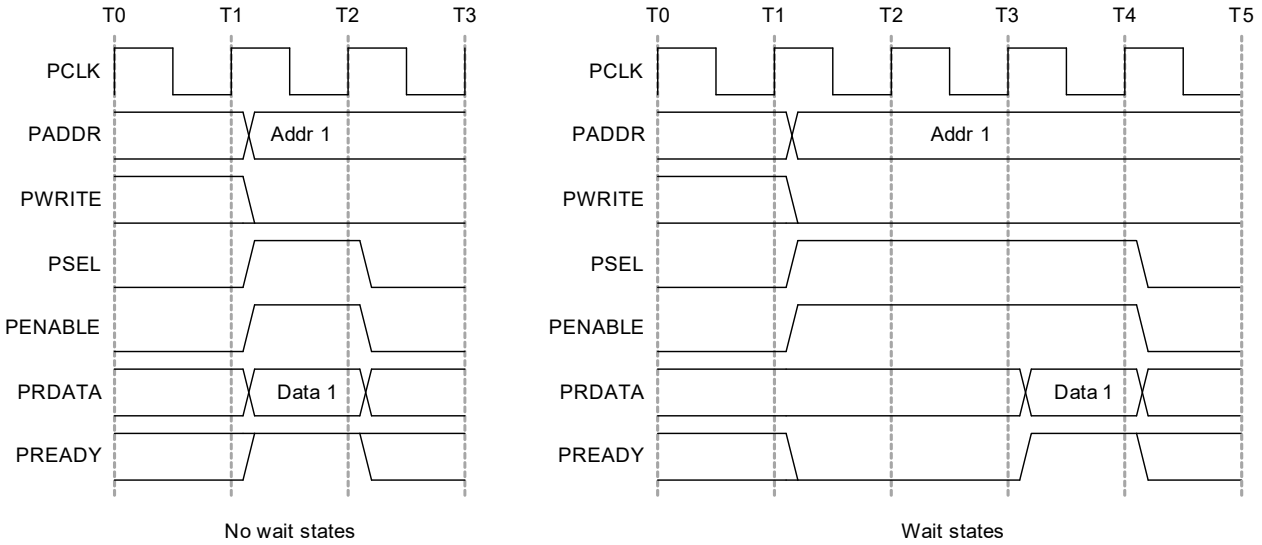

© 2025 Microchip Technology Inc. and its subsidiaries

8.5. Peripheral Access Controller (PAC)

8.5.1. Overview

One PAC is associated with each AHB-APB bridge and the PAC can provide write protection for registers of each peripheral connected on the same bridge.

The PAC peripheral bus clock (CLK_PACx_APB) can be enabled and disabled in the Power Manager. CLK_PAC0_APB and CLK_PAC1_APB are enabled at Reset. CLK_PAC2_APB is disabled at Reset. Refer to the *PM – Power Manager* for details. The PAC will continue to operate in any sleep mode where the selected clock source is running. Write protection does not apply for debugger access. When the debugger makes an access to a peripheral, write protection is ignored so that the debugger can update the register.

Write-protect registers allow the user to disable a selected peripheral's write-protection without doing a read-modify-write operation. These registers are mapped into two I/O memory locations, one for clearing and one for setting the register bits. Writing a one to a bit in the Write-Protect Clear register (WPCLR) will clear the corresponding bit in both registers (WPCLR and WPSET) and disable the write protection for the corresponding peripheral, while writing a one to a bit in the Write-Protect Set (WPSET) register will set the corresponding bit in both registers (WPCLR and WPSET) and enable the write protection for the corresponding peripheral. Both registers (WPCLR and WPSET) will return the same value when read.

If a peripheral is write-protected, and if a write access is performed, data will not be written, and the peripheral will return an access error (CPU exception).

The PAC also offers a safety feature for correct program execution, with a CPU exception generated on double write protection or double unprotection of a peripheral. If a peripheral n is write-protected and a write to one in WPSET[n] is detected, the PAC returns an error. This can be used to ensure that the application follows the intended program flow by always following a write-protect with an unprotect, and vice versa. However, in applications where a write-protected peripheral is used in several contexts, for example, interrupts, care should be taken so that either the interrupt can not happen while the main application or other interrupt levels manipulate the write protection status, or when the interrupt handler needs to unprotect the peripheral, based on the current protection status, by reading WPSET.

8.6. Register Description

Atomic 8-, 16- and 32-bit accesses are supported. In addition, the 8-bit quarters and 16-bit halves of a 32-bit register, and the 8-bit halves of a 16-bit register can be accessed directly. Refer to the Product Mapping for PAC locations.

8.6.1. PAC0 Register Description

© 2025 Microchip Technology Inc. and its subsidiaries

8.6.1.1. Write-Protect Clear

Name: WPCLR
Offset: 0x00
Reset: 0x000000
Property: –

Table 8-6. Register Bit Attribute Legend

Symbol	Description	Symbol	Description	Symbol	Description
R	Readable bit	**HC**	Cleared by Hardware	(Grey cell)	Unimplemented
W	Writable bit	**HS**	Set by Hardware	**X**	Bit is unknown at Reset
K	Write to clear	**S**	Software settable bit	—	—

Bit	31	30	29	28	27	26	25	24
Access								
Reset								

Bit	23	22	21	20	19	18	17	16
Access								
Reset								

Bit	15	14	13	12	11	10	9	8
Access								
Reset								

Bit	7	6	5	4	3	2	1	0
		EIC	RTC	WDT	GCLK	SYSCTRL	PM	
Access		R/W	R/W	R/W	R/W	R/W	R/W	
Reset		0	0	0	0	0	0	

Bit 6 – EIC

Writing a zero to these bits has no effect.
Writing a one to these bits will clear the Write-Protect bit for the corresponding peripherals.

Value	Description
0	Write protection is disabled
1	Write protection is enabled

Bit 5 – RTC

Writing a zero to these bits has no effect.
Writing a one to these bits will clear the Write-Protect bit for the corresponding peripherals.

Value	Description
0	Write protection is disabled
1	Write protection is enabled

Bit 4 – WDT

Writing a zero to these bits has no effect.
Writing a one to these bits will clear the Write-Protect bit for the corresponding peripherals.

Value	Description
0	Write protection is disabled

© 2025 Microchip Technology Inc. and its subsidiaries

Value	Description
1	Write protection is enabled

Bit 3 – GCLK

Writing a zero to these bits has no effect.
Writing a one to these bits will clear the Write-Protect bit for the corresponding peripherals.

Value	Description
0	Write protection is disabled
1	Write protection is enabled

Bit 2 – SYSCTRL

Writing a zero to these bits has no effect.
Writing a one to these bits will clear the Write-Protect bit for the corresponding peripherals.

Value	Description
0	Write protection is disabled
1	Write protection is enabled

Bit 1 – PM

Writing a zero to these bits has no effect.
Writing a one to these bits will clear the Write-Protect bit for the corresponding peripherals.

Value	Description
0	Write protection is disabled
1	Write protection is enabled

© 2025 Microchip Technology Inc. and its subsidiaries

8.6.1.2. Write-Protect Set

Name: WPSET
Offset: 0x04
Reset: 0x000000
Property: –

Table 8-7. Register Bit Attribute Legend

Symbol	Description	Symbol	Description	Symbol	Description
R	Readable bit	**HC**	Cleared by Hardware	(Grey cell)	Unimplemented
W	Writable bit	**HS**	Set by Hardware	**X**	Bit is unknown at Reset
K	Write to clear	**S**	Software settable bit	—	—

Bit	31	30	29	28	27	26	25	24
Access								
Reset								

Bit	23	22	21	20	19	18	17	16
Access								
Reset								

Bit	15	14	13	12	11	10	9	8
Access								
Reset								

Bit	7	6	5	4	3	2	1	0
		EIC	RTC	WDT	GCLK	SYSCTRL	PM	
Access		R/W	R/W	R/W	R/W	R/W	R/W	
Reset		0	0	0	0	0	0	

Bit 6 – EIC

Writing a zero to these bits has no effect.
Writing a one to these bits will set the Write-Protect bit for the corresponding peripherals.

Value	Description
0	Write protection is disabled
1	Write protection is enabled

Bit 5 – RTC

Writing a zero to these bits has no effect.
Writing a one to these bits will set the Write-Protect bit for the corresponding peripherals.

Value	Description
0	Write protection is disabled
1	Write protection is enabled

Bit 4 – WDT

Writing a zero to these bits has no effect.
Writing a one to these bits will set the Write-Protect bit for the corresponding peripherals.

Value	Description
0	Write protection is disabled

© 2025 Microchip Technology Inc. and its subsidiaries

Value	Description
1	Write protection is enabled

Bit 3 – GCLK

Writing a zero to these bits has no effect.
Writing a one to these bits will set the Write-Protect bit for the corresponding peripherals.

Value	Description
0	Write protection is disabled
1	Write protection is enabled

Bit 2 – SYSCTRL

Writing a zero to these bits has no effect.
Writing a one to these bits will set the Write-Protect bit for the corresponding peripherals.

Value	Description
0	Write protection is disabled
1	Write protection is enabled

Bit 1 – PM

Writing a zero to these bits has no effect.
Writing a one to these bits will set the Write-Protect bit for the corresponding peripherals.

Value	Description
0	Write protection is disabled
1	Write protection is enabled

8.6.2. PAC1 Register Description

© 2025 Microchip Technology Inc. and its subsidiaries

8.6.2.1. Write-Protect Clear

Name: WPCLR
Offset: 0x00
Reset: 0x000002
Property: –

Table 8-8. Register Bit Attribute Legend

Symbol	Description	Symbol	Description	Symbol	Description
R	Readable bit	**HC**	Cleared by Hardware	(Grey cell)	Unimplemented
W	Writable bit	**HS**	Set by Hardware	**X**	Bit is unknown at Reset
K	Write to clear	**S**	Software settable bit	—	—

Bit	31	30	29	28	27	26	25	24
Access								
Reset								

Bit	23	22	21	20	19	18	17	16
Access								
Reset								

Bit	15	14	13	12	11	10	9	8
Access								
Reset								

Bit	7	6	5	4	3	2	1	0
					PORT	NVMCTRL	DSU	
Access					R/W	R/W	R/W	
Reset					0	0	1	

Bit 3 – PORT

Writing a zero to these bits has no effect.
Writing a one to these bits will clear the Write-Protect bit for the corresponding peripherals.

Value	Description
0	Write protection is disabled
1	Write protection is enabled

Bit 2 – NVMCTRL

Writing a zero to these bits has no effect.
Writing a one to these bits will clear the Write-Protect bit for the corresponding peripherals.

Value	Description
0	Write protection is disabled
1	Write protection is enabled

Bit 1 – DSU

Writing a zero to these bits has no effect.
Writing a one to these bits will clear the Write-Protect bit for the corresponding peripherals.

Value	Description
0	Write protection is disabled

© 2025 Microchip Technology Inc. and its subsidiaries

Value	Description
1	Write protection is enabled

© 2025 Microchip Technology Inc. and its subsidiaries

8.6.2.2. Write-Protect Set

Name: WPSET
Offset: 0x04
Reset: 0x000002
Property: –

Table 8-9. Register Bit Attribute Legend

Symbol	Description	Symbol	Description	Symbol	Description
R	Readable bit	**HC**	Cleared by Hardware	(Grey cell)	Unimplemented
W	Writable bit	**HS**	Set by Hardware	**X**	Bit is unknown at Reset
K	Write to clear	**S**	Software settable bit	—	—

Bit	31	30	29	28	27	26	25	24
Access								
Reset								

Bit	23	22	21	20	19	18	17	16
Access								
Reset								

Bit	15	14	13	12	11	10	9	8
Access								
Reset								

Bit	7	6	5	4	3	2	1	0
					PORT	NVMCTRL	DSU	
Access					R/W	R/W	R/W	
Reset					0	0	1	

Bit 3 – PORT

Writing a zero to these bits has no effect.
Writing a one to these bits will set the Write-Protect bit for the corresponding peripherals.

Value	Description
0	Write protection is disabled
1	Write protection is enabled

Bit 2 – NVMCTRL

Writing a zero to these bits has no effect.
Writing a one to these bits will set the Write-Protect bit for the corresponding peripherals.

Value	Description
0	Write protection is disabled
1	Write protection is enabled

Bit 1 – DSU

Writing a zero to these bits has no effect.
Writing a one to these bits will set the Write-Protect bit for the corresponding peripherals.

Value	Description
0	Write protection is disabled

© 2025 Microchip Technology Inc. and its subsidiaries

Value	Description
1	Write protection is enabled

8.6.3. PAC2 Register Description

© 2025 Microchip Technology Inc. and its subsidiaries

8.6.3.1. Write-Protect Clear

Name: WPCLR
Offset: 0x00
Reset: 0x00800000
Property: –

Table 8-10. Register Bit Attribute Legend

Symbol	Description	Symbol	Description	Symbol	Description
R	Readable bit	**HC**	Cleared by Hardware	(Grey cell)	Unimplemented
W	Writable bit	**HS**	Set by Hardware	**X**	Bit is unknown at Reset
K	Write to clear	**S**	Software settable bit	—	—

Bit	31	30	29	28	27	26	25	24
Access								
Reset								

Bit	23	22	21	20	19	18	17	16
					PTC	DAC	AC	ADC
Access					R/W	R/W	R/W	R/W
Reset					0	0	0	0

Bit	15	14	13	12	11	10	9	8
	TC7	TC6	TC5	TC4	TC3	TC2	TC1	TC0
Access	R/W	R/W	R/W	R/W	R/W	R/W	R/W	R/W
Reset	0	0	0	0	0	0	0	0

Bit	7	6	5	4	3	2	1	0
	SERCOM[5:0]						EVSYS	
Access	R/W	R/W	R/W	R/W	R/W	R/W	R/W	
Reset	0	0	0	0	0	0	0	

Bit 19 – PTC

Writing a zero to these bits has no effect.
Writing a one to these bits will clear the Write-Protect bit for the corresponding peripherals.

Value	Description
0	Write protection is disabled
1	Write protection is enabled

Bit 18 – DAC

Writing a zero to these bits has no effect.
Writing a one to these bits will clear the Write-Protect bit for the corresponding peripherals.

Value	Description
0	Write protection is disabled
1	Write protection is enabled

Bit 17 – AC

Writing a zero to these bits has no effect.
Writing a one to these bits will clear the Write-Protect bit for the corresponding peripherals.

Value	Description
0	Write protection is disabled

© 2025 Microchip Technology Inc. and its subsidiaries

Value	Description
1	Write protection is enabled

Bit 16 – ADC

Writing a zero to these bits has no effect.
Writing a one to these bits will clear the Write-Protect bit for the corresponding peripherals.

Value	Description
0	Write protection is disabled
1	Write protection is enabled

Bits 8, 9, 10, 11, 12, 13, 14, 15 – TC

Writing a zero to these bits has no effect.
Writing a one to these bits will clear the Write-Protect bit for the corresponding peripherals.

Value	Description
0	Write protection is disabled
1	Write protection is enabled

Bits 7:2 – SERCOM[5:0]

Writing a zero to these bits has no effect.
Writing a one to these bits will clear the Write-Protect bit for the corresponding peripherals.

Value	Description
0	Write protection is disabled
1	Write protection is enabled

Bit 1 – EVSYS

Writing a zero to these bits has no effect.
Writing a one to these bits will clear the Write-Protect bit for the corresponding peripherals.

Value	Description
0	Write protection is disabled
1	Write protection is enabled

© 2025 Microchip Technology Inc. and its subsidiaries

8.6.3.2. Write-Protect Set

Name: WPSET
Offset: 0x04
Reset: 0x00800000
Property: –

Table 8-11. Register Bit Attribute Legend

Symbol	Description	Symbol	Description	Symbol	Description
R	Readable bit	**HC**	Cleared by Hardware	(Grey cell)	Unimplemented
W	Writable bit	**HS**	Set by Hardware	**X**	Bit is unknown at Reset
K	Write to clear	**S**	Software settable bit	—	—

Bit	31	30	29	28	27	26	25	24
Access								
Reset								

Bit	23	22	21	20	19	18	17	16
					PTC	DAC	AC	
Access					R/W	R/W	R/W	
Reset					0	0	0	

Bit	15	14	13	12	11	10	9	8
	TC7	TC6	TC5	TC4	TC3	TC2	TC1	TC0
Access	R/W	R/W	R/W	R/W	R/W	R/W	R/W	R/W
Reset	0	0	0	0	0	0	0	0

Bit	7	6	5	4	3	2	1	0
	SERCOM5	SERCOM4	SERCOM3	SERCOM2	SERCOM1	SERCOM0	EVSYS	
Access	R/W	R/W	R/W	R/W	R/W	R/W	R/W	
Reset	0	0	0	0	0	0	0	

Bit 19 – PTC

Writing a zero to these bits has no effect.
Writing a one to these bits will set the Write-Protect bit for the corresponding peripherals.

Value	Description
0	Write protection is disabled
1	Write protection is enabled

Bit 18 – DAC

Writing a zero to these bits has no effect.
Writing a one to these bits will set the Write-Protect bit for the corresponding peripherals.

Value	Description
0	Write protection is disabled
1	Write protection is enabled

Bit 17 – AC

Writing a zero to these bits has no effect.
Writing a one to these bits will set the Write-Protect bit for the corresponding peripherals.

Value	Description
0	Write protection is disabled

© 2025 Microchip Technology Inc. and its subsidiaries

Value	Description
1	Write protection is enabled

Bits 8, 9, 10, 11, 12, 13, 14, 15 – TC

Writing a zero to these bits has no effect.
Writing a one to these bits will set the Write-Protect bit for the corresponding peripherals.

Value	Description
0	Write protection is disabled
1	Write protection is enabled

Bits 2, 3, 4, 5, 6, 7 – SERCOM

Writing a zero to these bits has no effect.
Writing a one to these bits will set the Write-Protect bit for the corresponding peripherals.

Value	Description
0	Write protection is disabled
1	Write protection is enabled

Bit 1 – EVSYS

Writing a zero to these bits has no effect.
Writing a one to these bits will set the Write-Protect bit for the corresponding peripherals.

Value	Description
0	Write protection is disabled
1	Write protection is enabled

© 2025 Microchip Technology Inc. and its subsidiaries

9. Peripheral Dependencies

The following table shows an overview of all the peripherals in the device. The IRQ Line column shows the interrupt mapping, as described in Nested Vector Interrupt Controller section. The AHB and APB clock indexes correspond to the bit in the AHBMASK and APBMASK (x = A, B or C) registers in the Power Manager, while the Enabled at Reset column shows whether the peripheral clock is enabled at reset (Y) or not (N). Refer to the Power Manager AHBMASK, APBAMASK, APBBMASK and APBCMASK registers for details. The Generic Clock Index column corresponds to the value of the Generic Clock Selection ID bits in the Generic Clock Control register (CLKCTRL.ID) in the Generic Clock Controller. Refer to the GCLK CLKCTRL register description for details. The PAC Index column corresponds to the bit in the PACi (i = 0, 1 or 2) registers, while the Prot at Reset column shows whether the peripheral is protected at reset (Y) or not (N). Refer to the *PAC – Peripheral Access Controller* for details. The numbers in the Events User column correspond to the value of the User Multiplexer Selection bits in the User Multiplexer register (USER.USER) in the Event System. See the USER register description and Table 22-6 for details. The numbers in the Events Generator column correspond to the value of the Event Generator bits in the Channel register (CHANNEL.EVGEN) in the Event System. See the CHANNEL register description and Table 22-3 for details.

Table 9-1. Peripherals Configuration Summary

Peripheral Name	Base Address	IRQ Line	AHB Clock		APB Clock		Generic Clock	PAC		Events		
			Index	Enabled at Reset	Index	Enabled at Reset	Index	Index	Prot at Reset	User	Generator	SleepWalking
AHB-APB Bridge A	0x40000000		0	Y								
PAC0	0x40000000				0	Y						
PM	0x40000400	0			1	Y		1	N			Y
SYSCTRL	0x40000800	1			2	Y	0: DFLL48M reference	2	N			Y
GCLK	0x40000C00				3	Y		3	N			Y
WDT	0x40001000	2			4	Y	1	4	N			
RTC	0x40001400	3			5	Y	2	5	N		1: CMP0/ALARM0 2: CMP1 3: OVF 4-11: PER0-7	Y
EIC	0x40001800	NMI, 4			6	Y	3	6	N		12-27: EXTINT0-15	Y
AHB-APB Bridge B	0x41000000		1	Y								
PAC1	0x41000000				0	Y						
DSU	0x41002000		3	Y	1	Y		1	Y			
NVMCTRL	0x41004000	5	4	Y	2	Y		2	N			
PORT	0x41004400				3	Y		3	N			
AHB-APB Bridge C	0x42000000		2	Y								
PAC2	0x42000000				0	N						
EVSYS	0x42000400	6			1	N	4-11: one per CHANNEL	1	N			Y
SERCOM0	0x42000800	7			2	N	13: CORE 12:SLOW	2	N			Y
SERCOM1	0x42000C00	8			3	N	14:CORE 12: SLOW	3	N			Y
SERCOM2	0x42001000	9			4	N	15:CORE 12: SLOW	4	N			Y
SERCOM3	0x42001400	10			5	N	16:CORE 12: SLOW	5	N			Y
SERCOM4	0x42001800	11			6	N	17:CORE 12: SLOW	6	N			Y

© 2025 Microchip Technology Inc. and its subsidiaries

Table 9-1. Peripherals Configuration Summary (continued)

Peripheral Name	Base Address	IRQ Line	AHB Clock		APB Clock		Generic Clock	PAC		Events		
			Index	Enabled at Reset	Index	Enabled at Reset	Index	Index	Prot at Reset	User	Generator	SleepWalking
SERCOM5	0x42001C00	12			7	N	18:CORE 12: SLOW	7	N			Y
TC0	0x42002000	13			8	N	19	8	N	0: TC	28: OVF 29-30: MC0-1	Y
TC1	0x42002400	14			9	N	19	9	N	1: TC	31: OVF 32-33: MC0-1	Y
TC2	0x42002800	15			10	N	20	10	N	2: TC	34: OVF 35-36: MC0-1	Y
TC3	0x42002C00	16			11	N	20	11	N	3: TC	37: OVF 38-39: MC0-1	Y
TC4	0x42003000	17			12	N	21	12	N	4: TC	40: OVF 41-42: MC0-1	Y
TC5	0x42003400	18			13	N	21	13	N	5: TC	43: OVF 44-45: MC0-1	Y
TC6	0x42003800	19			14	N	22	14	N	6: TC	46: OVF 47-48: MC0-1	Y
TC7	0x42003C00	20			15	N	22	15	N	7: TC	49: OVF 50-51: MC0-1	Y
ADC	0x42004000	21			16	Y	23	16	N	8: START 9: SYNC	52: RESRDY 53: WINMON	Y
AC	0x42004400	22			17	N	24: DIG 25: ANA	17	N	10-11: COMP0-1	54-55: COMP0-1 56: WIN0	Y
DAC	0x42004800	23			18	N	26	18	N	12: START	57: EMPTY	Y
PTC	0x42004C00	24			19	N	27	19	N	13: STCONV	58: EOC 59:WCOMP	

© 2025 Microchip Technology Inc. and its subsidiaries

10. Device Service Unit (DSU)

10.1. Overview

The Device Service Unit (DSU) provides a means of detecting debugger probes. It enables the ARM Debug Access Port (DAP) to have control over multiplexed debug pads and CPU Reset. The DSU also provides system-level services to debug adapters in an ARM debug system. It implements a CoreSight Debug ROM that provides device identification as well as identification of other debug components within the system. Hence, it complies with the ARM Peripheral Identification specification. The DSU also provides system services to applications that need memory testing, as required for IEC60730 Class B compliance, for example. The DSU can be accessed simultaneously by a debugger and the CPU, as it is connected on the High-Speed Bus Matrix. For security reasons, some of the DSU features will be limited or unavailable when the device is protected by the NVMCTRL security bit.

10.2. Features

- CPU Reset Extension
- Debugger Probe Detection (Cold- and Hot-Plugging)
- Chip-Erase Command and Status
- 32-Bit Cyclic Redundancy Check (CRC32) of any Memory Accessible through the Bus Matrix
- ARM® CoreSight™ Compliant Device Identification
- Two Debug Communications Channels
- Debug Access Port Security Filter
- Onboard Memory Built-in Self-test (MBIST)

10.3. Block Diagram

Figure 10-1. DSU Block Diagram

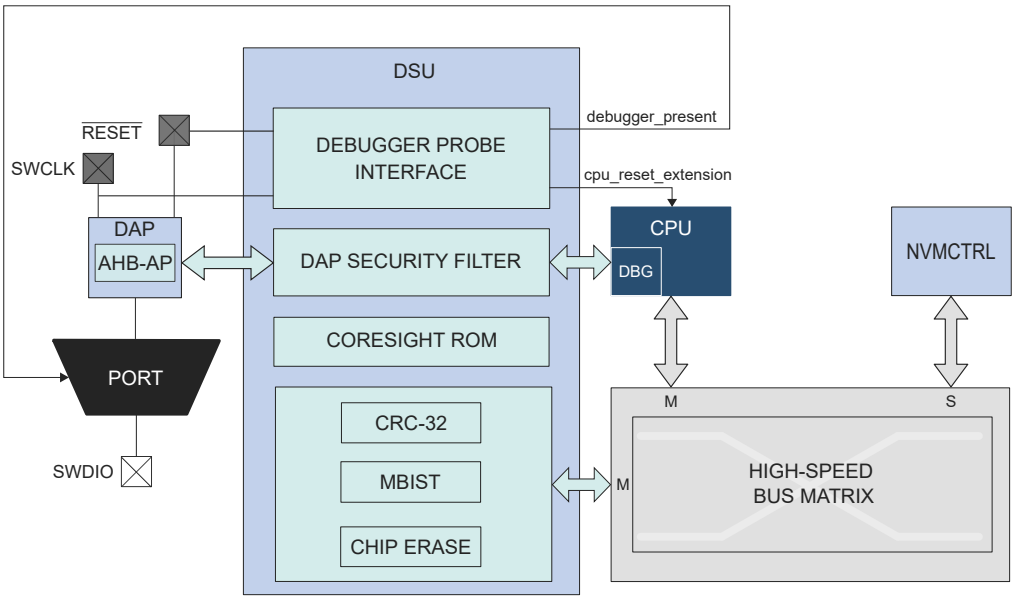

10.4. Signal Description

The DSU uses three signals to function.

© 2025 Microchip Technology Inc. and its subsidiaries

Signal Name	Type	Description
$\overline{\text{RESET}}$	Digital Input	External Reset (RESETN pin)
SWCLK	Digital Input	SW clock pin
SWDIO	Digital I/O	SW bidirectional data pin

10.5. Peripheral Dependencies

Table 10-1. Peripherals Configuration Summary

Peripheral Name	Base Address	IRQ Line	AHB Clock		APB Clock		Generic Clock	PAC		Events		
			Index	Enabled at Reset	Index	Enabled at Reset	Index	Index	Prot at Reset	User	Generator	SleepWalking
DSU	0x41002000		3	Y	1	Y		1	Y			

10.5.1. I/O Lines

The SWCLK pin is by default assigned to the DSU module to allow debugger probe detection and to stretch the CPU Reset phase. For more information, refer to Debugger Probe Detection. The Hot-Plugging feature depends on the PORT configuration. If the SWCLK pin function is changed in the port or if the PORT_MUX is disabled, the Hot-Plugging feature is disabled until a power reset or an external Reset is performed.

10.5.2. Power Management

The DSU will continue to operate in Idle mode.

10.5.3. Clocks

The DSU bus clocks (CLK_DSU_APB and CLK_DSU_AHB) can be enabled and disabled by the Power Manager. Refer to *PM – Power Manager*

10.5.4. Interrupts

Not applicable.

10.5.5. Events

Not applicable.

10.5.6. Register Access Protection

Registers with write access can be optionally write-protected by the Peripheral Access Controller (PAC), except for the following:

- The Debug Communication Channel 0 register (DCC0)
- The Debug Communication Channel 1 register (DCC1)

Note: Optional write protection is indicated by the 'PAC Write Protection' property in the register description. Write protection does not apply for accesses through an external debugger.

10.5.7. Analog Connections

Not applicable.

10.6. Debug Operation

10.6.1. Principle of Operation

The DSU provides basic services to allow on-chip debug using the ARM Debug Access Port and the ARM processor debug resources:

- CPU Reset extension
- Debugger probe detection

© 2025 Microchip Technology Inc. and its subsidiaries

For more details on the ARM debug components, refer to the ARM Debug Interface v5 Architecture Specification.

10.6.2. CPU Reset Extension

"CPU Reset extension" refers to the extension of the Reset phase of the CPU core after the external Reset is released. This ensures that the CPU is not executing code at start-up while a debugger is connects to the system. The debugger is detected on a $\overline{\text{RESET}}$ release event when SWCLK is low. At start-up, SWCLK is internally pulled up to avoid false detection of a debugger if the SWCLK pin is left unconnected. When the CPU is held in the Reset extension phase, the CPU Reset Extension bit of the Status A register (STATUSA.CRSTEXT) is set. To release the CPU, write a '1' to STATUSA.CRSTEXT. STATUSA.CRSTEXT will then be set to '0'. Writing a '0' to STATUSA.CRSTEXT has no effect. For security reasons, it is not possible to release the CPU Reset extension when the device is protected by the NVMCTRL security bit (See NVMCTRL.CTRLB.CMD's Set Security Bit (SSB) command.). Trying to do so sets the Protection Error bit (PERR) of the Status A register (STATUSA.PERR).

Figure 10-2. Typical CPU Reset Extension Set and Clear Timing Diagram

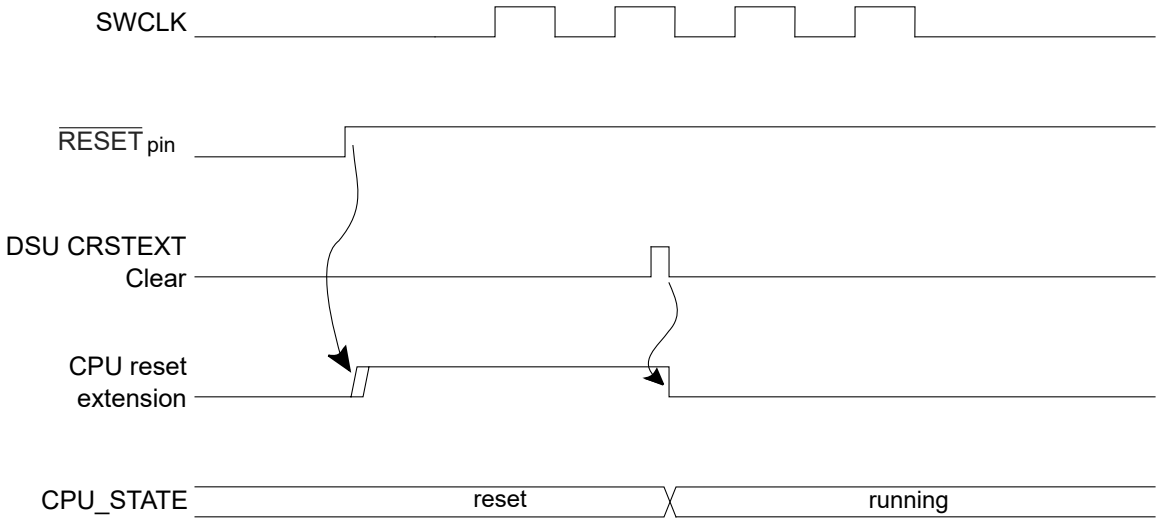

10.6.3. Debugger Probe Detection

10.6.3.1. Cold Plugging

Cold-Plugging is the detection of a debugger when the system is in Reset. Cold-Plugging is detected when the CPU Reset extension is requested, as described above.

10.6.3.2. Hot Plugging

Hot-Plugging is the detection of a debugger probe when the system is not in Reset. Hot-Plugging is not possible under Reset because the detector is reset when POR or $\overline{\text{RESET}}$ are asserted. Hot-Plugging is active when a SWCLK falling edge is detected. The SWCLK pad is multiplexed with other functions and the user must ensure that its default function is assigned to the debug system. If the SWCLK function is changed, the Hot-Plugging feature is disabled until a power reset or external Reset occurs. Availability of the Hot-Plugging feature can be read from the Hot-Plugging Enable bit of the Status B register (STATUSB.HPE).

© 2025 Microchip Technology Inc. and its subsidiaries

Figure 10-3. Hot-Plugging Detection Timing Diagram

The presence of a debugger probe is detected when either Hot-Plugging or Cold-Plugging is detected. Once detected, the Debugger Present bit of the Status B register (STATUSB.DBGPRES) is set. For security reasons, Hot-Plugging is not available when the device is protected by the NVMCTRL security bit.

This detection requires that pads are correctly powered. Thus, at cold start-up, this detection cannot be done until POR is released. If the device is protected, Cold-Plugging is the only way to detect a debugger probe, and so the external Reset timing must be longer than the POR timing. If external Reset is deasserted before POR release, the user must retry the procedure above until it gets connected to the device.

10.7. Chip Erase

Chip-Erase consists of removing all sensitive information stored in the chip and clearing the NVMCTRL security bit. Therefore, all volatile memories, the Flash memory (including the EEPROM Emulation area) and the RWWEE Emulation section will be erased. The Flash auxiliary rows, including the user row, will not be erased.

When the device is protected, the debugger must first reset the device in order to be detected. This ensures that internal registers are reset after the protected state is removed. The Chip-Erase operation is triggered by writing a '1' to the Chip-Erase bit in the Control register (CTRL.CE). This command will be discarded if the DSU is protected by the Peripheral Access Controller (PAC). Once issued, the module clears volatile memories prior to erasing the Flash array. To ensure that the Chip-Erase operation is completed, check the Done bit of the Status A register (STATUSA.DONE).

The Chip-Erase operation depends on clocks and power management features that can be altered by the CPU. For that reason, it is recommended to issue a Chip-Erase after a Cold-Plugging procedure to ensure that the device is in a known and safe state.

The recommended sequence is as follows:

1. Issue the Cold-Plugging procedure (refer to Cold Plugging), and the device performs these actions:
   a. Detects the debugger probe.
   b. Holds the CPU in reset.
2. Issue the Chip-Erase command by writing a '1' to CTRL.CE. The device then:
   a. Clears the system volatile memories.
   b. Erases the whole Flash array (including the EEPROM Emulation area, not including auxiliary rows) and the RWWEE Emulation section.
   c. Erases the lock row, removing the NVMCTRL security bit protection.
3. Check for completion by polling STATUSA.DONE (read as '1' when completed).
4. Reset the device to let the NVMCTRL update the fuses.

© 2025 Microchip Technology Inc. and its subsidiaries

10.8. Programming

Programming the Flash or RAM memories is only possible when the device is not protected by the NVMCTRL Security bit. The programming procedure is as follows:

1. At power-up, $\overline{\text{RESET}}$ is driven low by a debugger. The on-chip regulator holds the system in a POR state until the input supply is above the POR threshold (refer to the *Power-on Reset (POR) characteristics*). The system continues to be held in this Static state until the internally regulated supplies have reached a safe Operating state.
2. The PM starts, clocks are switched to the slow clock (Core Clock, System Clock, Flash Clock, and any Bus Clocks that do not have clock gate control). Internal Resets are maintained due to the external Reset.
3. The debugger maintains a low level on SWCLK. $\overline{\text{RESET}}$ is released, resulting in a debugger Cold-Plugging procedure.
4. The debugger generates a clock signal on the SWCLK pin, the Debug Access Port (DAP) receives a clock.
5. The CPU remains in Reset due to the Cold-Plugging procedure; meanwhile, the rest of the system is released.
6. A chip erase is issued to ensure that the Flash is fully erased prior to programming.
7. Programming is available through the AHB-AP.
8. After the operation is completed, the chip can be restarted either by asserting $\overline{\text{RESET}}$ or toggling power. Make sure that the SWCLK pin is high when releasing $\overline{\text{RESET}}$ to prevent extending the CPU Reset.

10.9. Intellectual Property Protection

Intellectual property protection consists of restricting access to internal memories from external tools when the device is protected, and this is accomplished by setting the NVMCTRL security bit. This Protected state can be removed by issuing a chip erase (refer to Chip Erase). When the device is protected, read/write accesses using the AHB-AP are limited to the DSU address range and DSU commands are restricted. When issuing a chip erase, sensitive information is erased from volatile memory and Flash.

The DSU implements a security filter that monitors the AHB transactions inside the DAP. If the device is protected, then AHB-AP read/write accesses outside the DSU external address range are discarded, causing an error response that sets the ARM AHB-AP sticky error bits (refer to the ARM Debug Interface v5 Architecture Specification on www.arm.com).

The DSU is intended to be accessed either:

- Internally from the CPU, without any limitation, even when the device is protected
- Externally from a debug adapter, with some restrictions when the device is protected

For security reasons, DSU features have limitations when used from a debug adapter. To differentiate external accesses from internal ones, the first 0x100 bytes of the DSU register map has been mirrored at offset 0x100:

- The first 0x100 bytes form the internal address range
- The next 0x100 bytes form the external address range

When the device is protected, the DAP can only issue MEM-AP accesses in the DSU range 0x0100-0x2000.

The DSU Operating registers are located in the 0x0000-0x00FF area and remapped in 0x0100-0x01FF to differentiate accesses coming from a debugger and the CPU. If the device is protected and an access is issued in the region 0x0100-0x01FF, it is subject to security restrictions. For more information, refer to Table 10-2.

© 2025 Microchip Technology Inc. and its subsidiaries

Figure 10-4. APB Memory Mapping

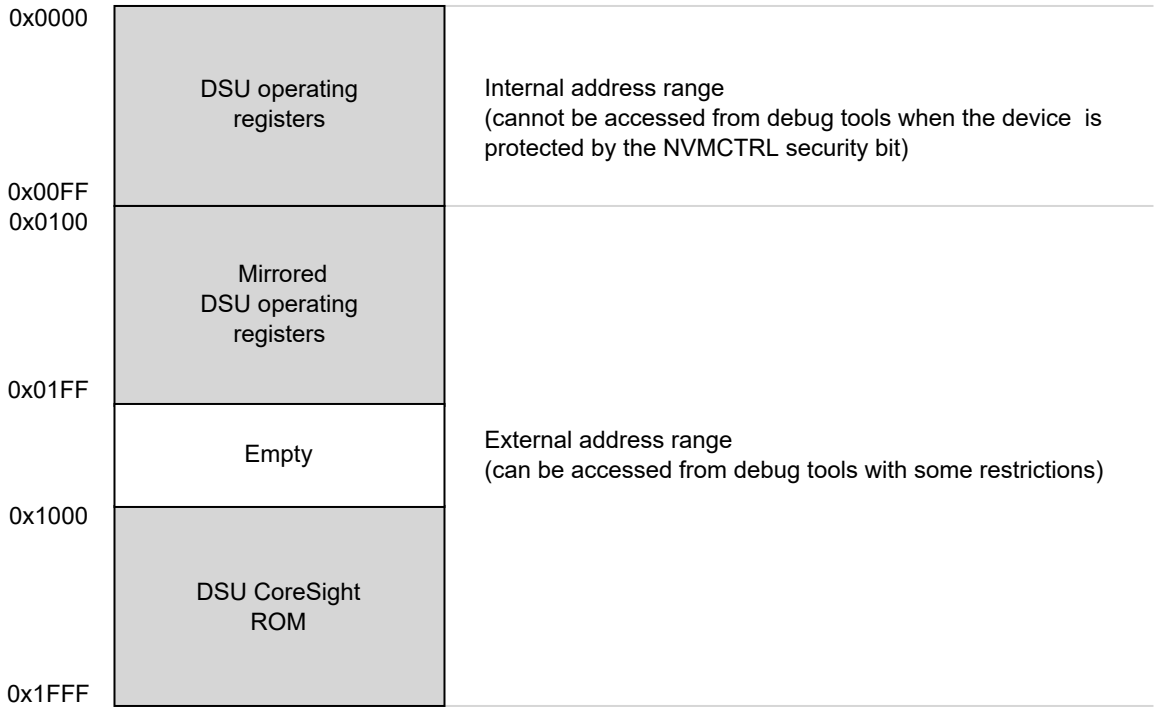

Some features not activated by APB transactions are not available when the device is protected:

Table 10-2. Feature Availability Under Protection

Features	Availability When the Device is Protected
CPU Reset Extension	Yes
Clear CPU Reset Extension	No
Debugger Cold-Plugging	Yes
Debugger Hot-Plugging	No

10.10. Program and Debug Interface Disable (PDID)

After activating the Program and Debug Interface Disable (PDID), the only way to write to the reprogrammable Flash memory (Non-Volatile Memory (NVM) is from the code executing on the device, chip erase or other re-programming attempts through the debug port will fail. Also, any attempt to read out any device content (NVM memory, RAM memory, and so on) will fail.

Contact a local Microchip sales office for additional information about PDID functionality.

10.11. Device Identification

Device identification relies on the ARM CoreSight component identification scheme, which allows the chip to be identified as a SAM device implementing a DSU. The DSU contains identification registers to differentiate the device.

10.11.1. CoreSight Identification

A system-level ARM® CoreSight™ ROM table is present in the device to identify the vendor and the chip identification method. Its address is provided in the MEM-AP BASE register inside the ARM Debug Access Port. The CoreSight ROM implements a 64-bit conceptual ID composed as follows from the PID0 to PID7 CoreSight ROM Table registers:

© 2025 Microchip Technology Inc. and its subsidiaries

Figure 10-5. Conceptual 64-bit Peripheral ID

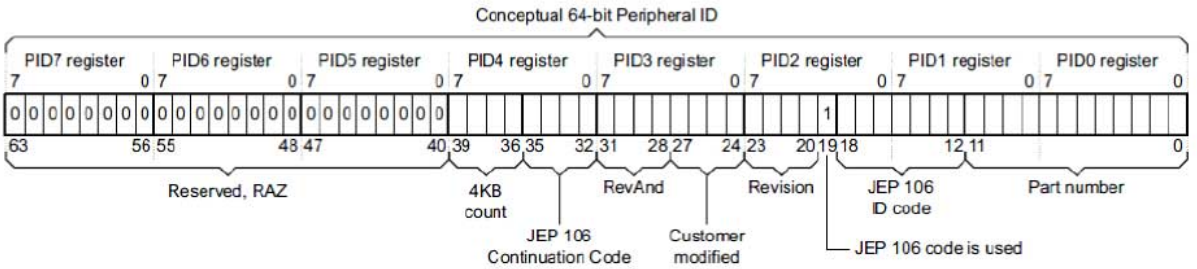

Table 10-3. Conceptual 64-Bit Peripheral ID Bit Descriptions

Field	Size	Description	Location
JEP-106 CC code	4	Continuation code: 0x0	PID4
JEP-106 ID code	7	Device ID: 0x1F	PID1+PID2
4KB count	4	Indicates that the CoreSight component is a ROM: 0x0	PID4
RevAnd	4	Not used; read as 0	PID3
CUSMOD	4	Not used; read as 0	PID3
PARTNUM	12	Contains 0xCD0 to indicate that DSU is present	PID0+PID1
REVISION	4	DSU revision (starts at 0x0 and increments by 1 at both major and minor revisions). Identifies DSU identification method variants. If 0x0, this indicates that device identification can be completed by reading the Device Identification register (DID)	PID2

For more information, refer to the ARM Debug Interface Version 5 Architecture Specification.

10.11.2. Chip Identification Method

The DSU DID register identifies the device by implementing the following information:

- Processor identification
- Product family identification
- Product series identification
- Device select

10.12. Functional Description

10.12.1. Principle of Operation

The DSU provides memory services, such as CRC32 or MBIST that require almost the same interface. Hence, the Address, Length and Data registers (ADDR, LENGTH, DATA) are shared. These shared registers must be configured first; then a command can be issued by writing the Control register. When a command is ongoing, other commands are discarded until the current operation is completed. Hence, the user must wait for the STATUSA.DONE bit to be set prior to issuing another one.

10.12.2. Basic Operation

10.12.2.1. Initialization

The module is enabled by enabling its clocks. For more details, refer to Clocks. The DSU registers can be PAC write-protected.

10.12.2.2. Operation From a Debug Adapter

Debug adapters should access the DSU registers in the external address range 0x100 – 0x2000. If the device is protected by the NVMCTRL security bit, accessing the first 0x100 bytes causes the system to return an error. Refer to Intellectual Property Protection.

© 2025 Microchip Technology Inc. and its subsidiaries

10.12.2.3. Operation From the CPU

There are no restrictions when accessing DSU registers from the CPU. However, the user should access DSU registers in the internal address range (0x0 – 0x100) to avoid external security restrictions. Refer to Intellectual Property Protection.

10.12.3. 32-bit Cyclic Redundancy Check CRC32

The DSU unit provides support for calculating a cyclic redundancy check (CRC32) value for a memory area (including Flash and AHB RAM).

When the CRC32 command is issued from:

- The internal range, the CRC32 can be operated at any memory location
- The external range, the CRC32 operation is restricted; DATA, ADDR, and LENGTH values are forced (see below)

Table 10-4. AMOD Bit Descriptions when Operating CRC32

AMOD[1:0]	Short name	External range restrictions
0	ARRAY	CRC32 is restricted to the full Flash array area (EEPROM Emulation area not included) DATA forced to 0xFFFFFFFF before calculation (no seed)
1	EEPROM	CRC32 of the whole EEPROM Emulation area DATA forced to 0xFFFFFFFF before calculation (no seed)
2-3	Reserved	-

The algorithm employed is the industry standard CRC32 algorithm using the generator polynomial 0xEDB88320 (reversed representation).

10.12.3.1. Starting CRC32 Calculation

CRC32 calculation for a memory range is started after writing the start address into the Address register (ADDR) and the size of the memory range into the Length register (LENGTH). Both must be word-aligned.

The initial value used for the CRC32 calculation must be written to the Data register (DATA). This value will usually be 0xFFFFFFFF, but can be, for example, the result of a previous CRC32 calculation if generating a common CRC32 of separate memory blocks.

Once completed, the calculated CRC32 value can be read out of the Data register. The read value must be complemented to match standard CRC32 implementations or kept noninverted if used as starting point for subsequent CRC32 calculations.

If the device is in protected state by the NVMCTRL security bit, it is only possible to calculate the CRC32 of the entire Flash array when operated from the external debug interface, where the Address, Length, and Data registers will be forced to predefined values once the CRC32 operation is started, and values written by the user are ignored. Such restriction is not applicable when the DSU is accessed by the CPU using the internal address range, as shown in APB Memory Mapping

The actual test is started by writing a '1' in the 32-bit Cyclic Redundancy Check bit of the Control register (CTRL.CRC). A running CRC32 operation can be canceled by resetting the module (writing '1' to CTRL.SWRST).

10.12.3.2. Interpreting the Results

The user should monitor the Status A register. When the operation is completed, STATUSA.DONE is set. Then the Bus Error bit of the Status A register (STATUSA.BERR) must be read to ensure that no bus error occurred.

10.12.4. Debug Communication Channels

The Debug Communication Channels (DCC0 and DCC1) consist of a pair of registers with associated handshake logic, accessible by both CPU and debugger even if the device is protected by the NVMCTRL security bit. The registers can be used to exchange data between the CPU and the

© 2025 Microchip Technology Inc. and its subsidiaries

debugger, during run time as well as in Debug mode. This enables the user to build a custom debug protocol using only these registers.

The DCC0 and DCC1 registers are accessible when the Protected state is active. When the device is protected, however, it is not possible to connect a debugger while the CPU is running (STATUSA.CRSTEXT is not writable and the CPU is held under Reset).

Two Debug Communication Channel status bits in the Status B registers (STATUS.DCCDx) indicate whether a new value has been written in DCC0 or DCC1. These bits, DCC0D and DCC1D, are located in the STATUSB registers. They are automatically set on write and cleared on read.

Note: The DCC0 and DCC1 registers are shared with the on-board memory testing logic (MBIST). Accordingly, DCC0 and DCC1 must not be used while performing MBIST operations.

10.12.5. Testing of On-Board Memories MBIST

The DSU implements a feature for automatic testing of memory, also known as MBIST (memory built-in self test). This is primarily intended for production test of on-board memories. MBIST cannot be operated from the external address range when the device is protected by the NVMCTRL security bit. If an MBIST command is issued when the device is protected, a protection error is reported in the Protection Error bit in the Status A register (STATUSA.PERR).

1. Algorithm
   The algorithm used for testing is a type of March algorithm called "March LR". This algorithm can detect a wide range of memory defects, while still keeping a linear run time. The algorithm is :
   a. Write entire memory to '0', in any order.
   b. Bit by bit read '0', write '1', in descending order.
   c. Bit by bit read '1', write '0', read '0', write '1', in ascending order.
   d. Bit by bit read '1', write '0', in ascending order.
   e. Bit by bit read '0', write '1', read '1', write '0', in ascending order.
   f. Read '0' from entire memory, in ascending order.

   The specific implementation used as a run time which depends on the CPU clock frequency and the number of bytes tested in the RAM. The detected faults are:
   - Address decoder faults
   - Stuck-at faults
   - Transition faults
   - Coupling faults
   - Linked Coupling faults
2. Starting MBIST
   To test a memory, you must write the Start address of the memory to the ADDR.ADDR bit field, and the size of the memory into the Length register.

   For best test coverage, an entire physical memory block must be tested at once. It is possible to test only a subset of a memory, but the test coverage will then be somewhat lower.

   The actual test is started by writing a '1' to CTRL.MBIST. A running MBIST operation can be canceled by writing a '1' to CTRL.SWRST.
3. Interpreting the Results
   The tester must monitor the STATUSA register. When the operation is completed, STATUSA.DONE is set. There are two different modes:
   - ADDR.AMOD = 0: exit-on-error (default)

© 2025 Microchip Technology Inc. and its subsidiaries

In this mode, the algorithm terminates either when a fault is detected or on successful completion. In both cases, STATUSA.DONE is set. If an error was detected, STATUSA.FAIL will be set. Then the user can read the DATA and ADDR registers to locate the fault.

4. Locating Faults
   If the test stops with STATUSA.FAIL set, one or more bits failed the test. The test stops at the first detected error. The position of the failing bit can be found by reading the following registers:
   - ADDR: Address of the word containing the failing bit
   - DATA: contains data to identify which bit failed, and during which phase of the test it failed. The DATA register will in this case contains the following bit groups:

Figure 10-6. DATA bits Description When MBIST Operation Returns an Error

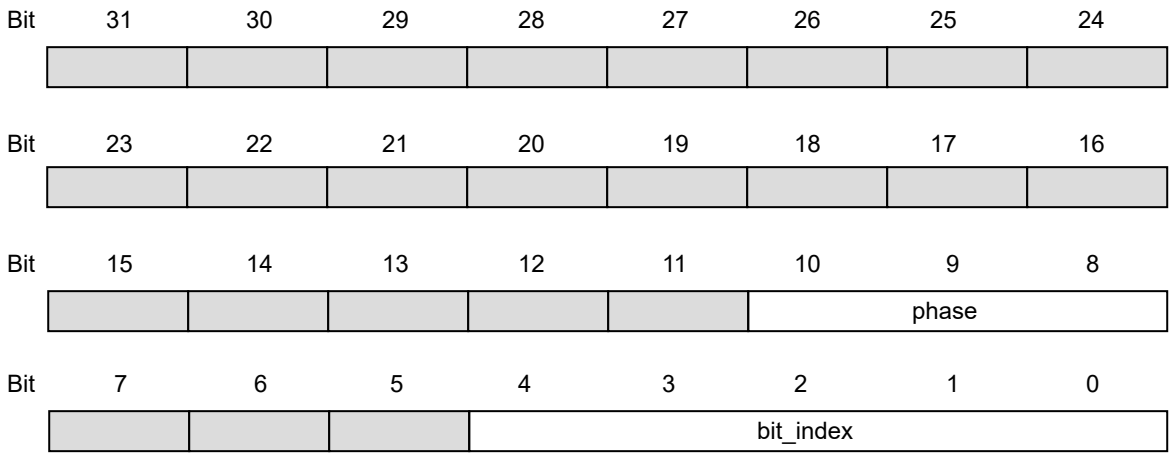

- bit_index: contains the bit number of the failing bit
- phase: indicates which phase of the test failed and the cause of the error, as listed in the following table.

Table 10-5. MBIST Operation Phases

Phase	Test actions
0	Write all bits to zero. This phase cannot fail. Ascending order.
1	Read '0', write '1', descending order
2	Read '1', write '0', ascending order
3	Read '0', write '1', ascending order
4	Read '1', write '0', ascending order
5	Read '0', write '1', ascending order
6	Read '1', write '0', ascending order
7	Read all zeros. bit_index is not used. Ascending order.

Table 10-6. AMOD Bit Descriptions for MBIST

AMOD[1:0]	Description
0x0	Exit on Error
0x1	Reserved
0x2, 0x3	Reserved

10.12.6. System Services Availability when Accessed Externally and Device is Protected

External access: Access performed in the DSU address offset 0x200-0x1FFF range.

Internal access: Access performed in the DSU address offset 0x000-0x100 range.

© 2025 Microchip Technology Inc. and its subsidiaries

Table 10-7. Available Features when Operated From The External Address Range and Device is Protected

Features	Availability From The External Address Range and Device is Protected
Chip-Erase command and status	Yes
CRC32	Yes, only full array(EEPROM Emulation area not included) or full RWWEE Emulation
CoreSight Compliant Device identification	Yes
Debug communication channels	Yes
Testing of onboard memories (MBIST)	No
STATUSA.CRSTEXT clearing	No (STATUSA.PERR is set when attempting to do so)

© 2025 Microchip Technology Inc. and its subsidiaries

10.13. Register Summary

Offset	Name	Bit Pos.	7	6	5	4	3	2	1	0
0x00	CTRL	7:0	Reserved	Reserved		CE	MBIST			SWRST
0x01	STATUSA	7:0				PERR	FAIL	BERR	CRSTEXT	DONE
0x02	STATUSB	7:0				HPE	DCCD1	DCCD0	DBGPRES	PROT
0x03	Reserved									
0x04	ADDR	7:0	ADDR[5:0]						AMOD[1:0]	
		15:8	ADDR[13:6]							
		23:16	ADDR[21:14]							
		31:24	ADDR[29:22]							
0x08	LENGTH	7:0	LENGTH[5:0]							
		15:8	LENGTH[13:6]							
		23:16	LENGTH[21:14]							
		31:24	LENGTH[29:22]							
0x0C	DATA	7:0	DATA[7:0]							
		15:8	DATA[15:8]							
		23:16	DATA[23:16]							
		31:24	DATA[31:24]							
0x10	DCC0	7:0	DATA[7:0]							
		15:8	DATA[15:8]							
		23:16	DATA[23:16]							
		31:24	DATA[31:24]							
0x14	DCC1	7:0	DATA[7:0]							
		15:8	DATA[15:8]							
		23:16	DATA[23:16]							
		31:24	DATA[31:24]							
0x18	DID	7:0	DEVSEL[7:0]							
		15:8	DIE[3:0]				REVISION[3:0]			
		23:16	FAMILY[0]		SERIES[5:0]					
		31:24	PROCESSOR[3:0]				FAMILY[4:1]			
0x1C ... 0x0FFF	Reserved									
0x1000	ENTRY0	7:0							FMT	EPRES
		15:8	ADDOFF[3:0]							
		23:16	ADDOFF[11:4]							
		31:24	ADDOFF[19:12]							
0x1004	ENTRY1	7:0							FMT	EPRES
		15:8	ADDOFF[3:0]							
		23:16	ADDOFF[11:4]							
		31:24	ADDOFF[19:12]							
0x1008	END	7:0	END[7:0]							
		15:8	END[15:8]							
		23:16	END[23:16]							
		31:24	END[31:24]							
0x100C ... 0x1FCB	Reserved									
0x1FCC	MEMTYPE	7:0								SMEMP
		15:8								
		23:16								
		31:24								
0x1FD0	PID4	7:0	FKBC[3:0]				JEPCC[3:0]			
		15:8								
		23:16								
		31:24								
0x1FD4 ... 0x1FDF	Reserved									

© 2025 Microchip Technology Inc. and its subsidiaries

Register Summary (continued)

Offset	Name	Bit Pos.	7	6	5	4	3	2	1	0
0x1FE0	PID0	7:0	PARTNBL[7:0]							
		15:8								
		23:16								
		31:24								
0x1FE4	PID1	7:0	JEPIDCL[3:0]				PARTNBH[3:0]			
		15:8								
		23:16								
		31:24								
0x1FE8	PID2	7:0	REVISION[3:0]				JEPU	JEPIDCH[2:0]		
		15:8								
		23:16								
		31:24								
0x1FEC	PID3	7:0	REVAND[3:0]				CUSMOD[3:0]			
		15:8								
		23:16								
		31:24								
0x1FF0	CID0	7:0	PREAMBLEB0[7:0]							
		15:8								
		23:16								
		31:24								
0x1FF4	CID1	7:0	CCLASS[3:0]				PREAMBLE[3:0]			
		15:8								
		23:16								
		31:24								
0x1FF8	CID2	7:0	PREAMBLEB2[7:0]							
		15:8								
		23:16								
		31:24								
0x1FFC	CID3	7:0	PREAMBLEB3[7:0]							
		15:8								
		23:16								
		31:24								

© 2025 Microchip Technology Inc. and its subsidiaries

10.13.1. Control

Name: CTRL
Offset: 0x0000
Reset: 0x00
Property: PAC Write Protection

Table 10-8. Register Bit Attribute Legend

Symbol	Description	Symbol	Description	Symbol	Description
R	Readable bit	**HC**	Cleared by Hardware	(Grey cell)	Unimplemented
W	Writable bit	**HS**	Set by Hardware	**X**	Bit is unknown at Reset
K	Write to clear	**S**	Software settable bit	—	—

Bit	7	6	5	4	3	2	1	0
	Reserved	Reserved		CE	MBIST			SWRST
Access	-	-		W	W			W
Reset	0	0		0	0			0

Bit 7 – Reserved Must be set to 0.

Bit 6 – Reserved Must be set to 0.

Bit 4 – CE Chip Erase
Writing a '0' to this bit has no effect.
Writing a '1' to this bit starts the chip erase operation.

Bit 3 – MBIST Memory Built-In Self-Test
Writing a '0' to this bit has no effect.
Writing a '1' to this bit starts the memory BIST algorithm.

Bit 0 – SWRST Software Reset
Writing a '0' to this bit has no effect.
Writing a '1' to this bit resets the module.

© 2025 Microchip Technology Inc. and its subsidiaries

10.13.2. Status A

Name: STATUSA
Offset: 0x0001
Reset: 0x00
Property: PAC Write Protection

Table 10-9. Register Bit Attribute Legend

Symbol	Description	Symbol	Description	Symbol	Description
R	Readable bit	**HC**	Cleared by Hardware	(Grey cell)	Unimplemented
W	Writable bit	**HS**	Set by Hardware	**X**	Bit is unknown at Reset
K	Write to clear	**S**	Software settable bit	—	—

Bit	7	6	5	4	3	2	1	0
				PERR	FAIL	BERR	CRSTEXT	DONE
Access				R/W	R/W	R/W	R/W	R/W
Reset				0	0	0	0	0

Bit 4 – PERR Protection Error
Writing a '0' to this bit has no effect.
Writing a '1' to this bit clears the Protection Error bit.
This bit is set when a command that is not allowed in Protected state is issued.

Bit 3 – FAIL Failure
Writing a '0' to this bit has no effect.
Writing a '1' to this bit clears the Failure bit.
This bit is set when a DSU operation failure is detected.

Bit 2 – BERR Bus Error
Writing a '0' to this bit has no effect.
Writing a '1' to this bit clears the Bus Error bit.
This bit is set when a bus error is detected.

Bit 1 – CRSTEXT CPU Reset Phase Extension
Writing a '0' to this bit has no effect.
Writing a '1' to this bit clears the CPU Reset Phase Extension bit.
This bit is set when a debug adapter Cold-Plugging is detected, which extends the CPU Reset phase.

Bit 0 – DONE Done
Writing a '0' to this bit has no effect.
Writing a '1' to this bit clears the Done bit.
This bit is set when a DSU operation is completed.

© 2025 Microchip Technology Inc. and its subsidiaries

10.13.3. Status B

Name: STATUSB
Offset: 0x0002
Reset: 0x1X
Property: PAC Write Protection

Bit	7	6	5	4	3	2	1	0
				HPE	DCCD1	DCCD0	DBGPRES	PROT
Access				R	R	R	R	R
Reset				1	0	0	0	0

Bit 4 – HPE Hot-Plugging Enable
Writing a '0' to this bit has no effect.
Writing a '1' to this bit has no effect.
This bit is set when Hot-Plugging is enabled.
This bit is cleared when Hot-Plugging is disabled. This is the case when the SWCLK function is changed. Only a power Reset or a external Reset can set it again.

Bits 2, 3 – DCCDx Debug Communication Channel x Dirty [x=1..0]
Writing a '0' to this bit has no effect.
Writing a '1' to this bit has no effect.
This bit is set when DCCx is written.
This bit is cleared when DCCx is read.

Bit 1 – DBGPRES Debugger Present
Writing a '0' to this bit has no effect.
Writing a '1' to this bit has no effect.
This bit is set when a debugger probe is detected.
This bit is never cleared.

Bit 0 – PROT Protected
Writing a '0' to this bit has no effect.
Writing a '1' to this bit has no effect.
This bit is set at power-up when the device is protected.
This bit is never cleared.

© 2025 Microchip Technology Inc. and its subsidiaries

10.13.4. Address

Name: ADDR
Offset: 0x0004
Reset: 0x00000000
Property: PAC Write Protection

Table 10-10. Register Bit Attribute Legend

Symbol	Description	Symbol	Description	Symbol	Description
R	Readable bit	**HC**	Cleared by Hardware	(Grey cell)	Unimplemented
W	Writable bit	**HS**	Set by Hardware	**X**	Bit is unknown at Reset
K	Write to clear	**S**	Software settable bit	—	—

Bit	31	30	29	28	27	26	25	24
	ADDR[29:22]							
Access	R/W	R/W	R/W	R/W	R/W	R/W	R/W	R/W
Reset	0	0	0	0	0	0	0	0

Bit	23	22	21	20	19	18	17	16
	ADDR[21:14]							
Access	R/W	R/W	R/W	R/W	R/W	R/W	R/W	R/W
Reset	0	0	0	0	0	0	0	0

Bit	15	14	13	12	11	10	9	8
	ADDR[13:6]							
Access	R/W	R/W	R/W	R/W	R/W	R/W	R/W	R/W
Reset	0	0	0	0	0	0	0	0

Bit	7	6	5	4	3	2	1	0
	ADDR[5:0]						AMOD[1:0]	
Access	R/W	R/W	R/W	R/W	R/W	R/W	R/W	R/W
Reset	0	0	0	0	0	0	0	0

Bits 31:2 – ADDR[29:0] Address
Initial word start address needed for memory operations.

Bits 1:0 – AMOD[1:0] Access Mode
The functionality of these bits is dependent on the operation mode.
Bit description when operating CRC32: refer to 32-bit Cyclic Redundancy Check CRC32
Bit description when testing onboard memories (MBIST): refer to Testing of On-Board Memories MBIST

© 2025 Microchip Technology Inc. and its subsidiaries

10.13.5. Length

Name: LENGTH
Offset: 0x0008
Reset: 0x00000000
Property: PAC Write Protection

Table 10-11. Register Bit Attribute Legend

Symbol	Description	Symbol	Description	Symbol	Description
R	Readable bit	**HC**	Cleared by Hardware	(Grey cell)	Unimplemented
W	Writable bit	**HS**	Set by Hardware	**X**	Bit is unknown at Reset
K	Write to clear	**S**	Software settable bit	—	—

Bit	31	30	29	28	27	26	25	24
	LENGTH[29:22]							
Access	R/W	R/W	R/W	R/W	R/W	R/W	R/W	R/W
Reset	0	0	0	0	0	0	0	0

Bit	23	22	21	20	19	18	17	16
	LENGTH[21:14]							
Access	R/W	R/W	R/W	R/W	R/W	R/W	R/W	R/W
Reset	0	0	0	0	0	0	0	0

Bit	15	14	13	12	11	10	9	8
	LENGTH[13:6]							
Access	R/W	R/W	R/W	R/W	R/W	R/W	R/W	R/W
Reset	0	0	0	0	0	0	0	0

Bit	7	6	5	4	3	2	1	0
	LENGTH[5:0]							
Access	R/W	R/W	R/W	R/W	R/W	R/W		
Reset	0	0	0	0	0	0		

Bits 31:2 – LENGTH[29:0] Length
Length in words needed for memory operations.

© 2025 Microchip Technology Inc. and its subsidiaries

10.13.6. Data

Name: DATA
Offset: 0x000C
Reset: 0x00000000
Property: PAC Write Protection

Table 10-12. Register Bit Attribute Legend

Symbol	Description	Symbol	Description	Symbol	Description
R	Readable bit	**HC**	Cleared by Hardware	(Grey cell)	Unimplemented
W	Writable bit	**HS**	Set by Hardware	**X**	Bit is unknown at Reset
K	Write to clear	**S**	Software settable bit	—	—

Bit	31	30	29	28	27	26	25	24
	DATA[31:24]							
Access	R/W	R/W	R/W	R/W	R/W	R/W	R/W	R/W
Reset	0	0	0	0	0	0	0	0

Bit	23	22	21	20	19	18	17	16
	DATA[23:16]							
Access	R/W	R/W	R/W	R/W	R/W	R/W	R/W	R/W
Reset	0	0	0	0	0	0	0	0

Bit	15	14	13	12	11	10	9	8
	DATA[15:8]							
Access	R/W	R/W	R/W	R/W	R/W	R/W	R/W	R/W
Reset	0	0	0	0	0	0	0	0

Bit	7	6	5	4	3	2	1	0
	DATA[7:0]							
Access	R/W	R/W	R/W	R/W	R/W	R/W	R/W	R/W
Reset	0	0	0	0	0	0	0	0

Bits 31:0 – DATA[31:0] Data
Memory operation initial value or result value.

© 2025 Microchip Technology Inc. and its subsidiaries

10.13.7. Debug Communication Channel 0

Name: DCC0
Offset: 0x0010
Reset: 0x00000000
Property: -

Table 10-13. Register Bit Attribute Legend

Symbol	Description	Symbol	Description	Symbol	Description
R	Readable bit	**HC**	Cleared by Hardware	(Grey cell)	Unimplemented
W	Writable bit	**HS**	Set by Hardware	**X**	Bit is unknown at Reset
K	Write to clear	**S**	Software settable bit	—	—

Bit	31	30	29	28	27	26	25	24
	DATA[31:24]							
Access	R/W	R/W	R/W	R/W	R/W	R/W	R/W	R/W
Reset	0	0	0	0	0	0	0	0

Bit	23	22	21	20	19	18	17	16
	DATA[23:16]							
Access	R/W	R/W	R/W	R/W	R/W	R/W	R/W	R/W
Reset	0	0	0	0	0	0	0	0

Bit	15	14	13	12	11	10	9	8
	DATA[15:8]							
Access	R/W	R/W	R/W	R/W	R/W	R/W	R/W	R/W
Reset	0	0	0	0	0	0	0	0

Bit	7	6	5	4	3	2	1	0
	DATA[7:0]							
Access	R/W	R/W	R/W	R/W	R/W	R/W	R/W	R/W
Reset	0	0	0	0	0	0	0	0

Bits 31:0 – DATA[31:0] Data
Data register.

© 2025 Microchip Technology Inc. and its subsidiaries

10.13.8. Debug Communication Channel 1

Name: DCC1
Offset: 0x0014
Reset: 0x00000000
Property: -

Table 10-14. Register Bit Attribute Legend

Symbol	Description	Symbol	Description	Symbol	Description
R	Readable bit	**HC**	Cleared by Hardware	(Grey cell)	Unimplemented
W	Writable bit	**HS**	Set by Hardware	**X**	Bit is unknown at Reset
K	Write to clear	**S**	Software settable bit	—	—

Bit	31	30	29	28	27	26	25	24
	DATA[31:24]							
Access	R/W	R/W	R/W	R/W	R/W	R/W	R/W	R/W
Reset	0	0	0	0	0	0	0	0

Bit	23	22	21	20	19	18	17	16
	DATA[23:16]							
Access	R/W	R/W	R/W	R/W	R/W	R/W	R/W	R/W
Reset	0	0	0	0	0	0	0	0

Bit	15	14	13	12	11	10	9	8
	DATA[15:8]							
Access	R/W	R/W	R/W	R/W	R/W	R/W	R/W	R/W
Reset	0	0	0	0	0	0	0	0

Bit	7	6	5	4	3	2	1	0
	DATA[7:0]							
Access	R/W	R/W	R/W	R/W	R/W	R/W	R/W	R/W
Reset	0	0	0	0	0	0	0	0

Bits 31:0 – DATA[31:0] Data
Data register.

© 2025 Microchip Technology Inc. and its subsidiaries

10.13.9. Device Identification

Name: DID
Offset: 0x0018
Property: -

Table 10-15. Register Bit Attribute Legend

Symbol	Description	Symbol	Description	Symbol	Description
R	Readable bit	**HC**	Cleared by Hardware	(Grey cell)	Unimplemented
W	Writable bit	**HS**	Set by Hardware	**X**	Bit is unknown at Reset
K	Write to clear	**S**	Software settable bit	—	—

The information in this register is related to the Ordering Information (1).

Bit	31	30	29	28	27	26	25	24
	PROCESSOR[3:0]				FAMILY[4:1]			
Access	R	R	R	R	R	R	R	R
Reset	p	p	p	p	f	f	f	f

Bit	23	22	21	20	19	18	17	16
	FAMILY[0]		SERIES[5:0]					
Access	R		R	R	R	R	R	R
Reset	f		s	s	s	s	s	s

Bit	15	14	13	12	11	10	9	8
	DIE[3:0]				REVISION[3:0]			
Access	R	R	R	R	R	R	R	R
Reset	d	d	d	d	r	r	r	r

Bit	7	6	5	4	3	2	1	0
	DEVSEL[7:0]							
Access	R	R	R	R	R	R	R	R
Reset	x	x	x	x	x	x	x	x

Bits 31:28 – PROCESSOR[3:0] Processor
The value of this field defines the processor used on the device.
Note: For this device, the value of this field is 0x1, corresponding to the Arm Cortex-M0+ processor.

Bits 27:23 – FAMILY[4:0] Product Family
The value of this field corresponds to the product family part of the ordering code.
Note: For this device, the value of this field is 0x0.

Bits 21:16 – SERIES[5:0] Product Series
The value of this field corresponds to the product series part of the ordering code.

Value	Description
0x00	PIC32CM16/32 GV00
0x01 - 0x3F	Reserved

Bits 15:12 – DIE[3:0] Die Number
Identifies the die family.

© 2025 Microchip Technology Inc. and its subsidiaries

Bits 11:8 – REVISION[3:0] Revision Number

Identifies the die revision number. Refer the product family silicon errata and data sheet clarification document for further information.

Note: The device variant (last letter of the ordering number) is independent of the die revision (DSU.DID.REVISION): The device variant denotes functional differences, whereas the die revision marks evolution of the die.

Bits 7:0 – DEVSEL[7:0] Device Selection

This bit field identifies a device within a product family and product series.

Table 10-16. PIC32CM16/32 GV00 Device Selection

Value	Description
0x00-0x11	Reserved
0x12	32 KB Flash / 4 KB SRAM / 64-pin
0x13	16 KB Flash / 2 KB SRAM / 64-pin
0x14	32 KB Flash / 4 KB SRAM / 48-pin
0x15	16 KB Flash / 2 KB SRAM / 48-pin
0x16	32 KB Flash / 4 KB SRAM /32-pin
0x17	16 KB Flash /2 KB SRAM /32-pin
0x18 - 0xFF	Reserved

© 2025 Microchip Technology Inc. and its subsidiaries

10.13.10. CoreSight ROM Table Entry 0

Name: ENTRY0
Offset: 0x1000
Reset: 0xXXXXX00X
Property: PAC Write Protection

Table 10-17. Register Bit Attribute Legend

Symbol	Description	Symbol	Description	Symbol	Description
R	Readable bit	**HC**	Cleared by Hardware	(Grey cell)	Unimplemented
W	Writable bit	**HS**	Set by Hardware	**X**	Bit is unknown at Reset
K	Write to clear	**S**	Software settable bit	—	—

Bit	31	30	29	28	27	26	25	24
	ADDOFF[19:12]							
Access	R	R	R	R	R	R	R	R
Reset	x	x	x	x	x	x	x	x

Bit	23	22	21	20	19	18	17	16
	ADDOFF[11:4]							
Access	R	R	R	R	R	R	R	R
Reset	x	x	x	x	x	x	x	x

Bit	15	14	13	12	11	10	9	8
	ADDOFF[3:0]							
Access	R	R	R	R				
Reset	x	x	x	x				

Bit	7	6	5	4	3	2	1	0
							FMT	EPRES
Access							R	R
Reset							1	x

Bits 31:12 – ADDOFF[19:0] Address Offset
The base address of the component, relative to the base address of this ROM table.

Bit 1 – FMT Format
Always reads as '1', indicating a 32-bit ROM table.

Bit 0 – EPRES Entry Present
This bit indicates whether an entry is present at this location in the ROM table.
This bit is set at power-up if the Debug Access Level is different from DAL0, indicating that the entry is present.
This bit is cleared at power-up if the Debug Access Level is DAL0, indicating that the entry is not present.

© 2025 Microchip Technology Inc. and its subsidiaries

10.13.11. CoreSight ROM Table Entry 1

Name: ENTRY1
Offset: 0x1004
Reset: 0xXXXXX00X
Property: PAC Write Protection

Table 10-18. Register Bit Attribute Legend

Symbol	Description	Symbol	Description	Symbol	Description
R	Readable bit	**HC**	Cleared by Hardware	(Grey cell)	Unimplemented
W	Writable bit	**HS**	Set by Hardware	**X**	Bit is unknown at Reset
K	Write to clear	**S**	Software settable bit	—	—

Bit	31	30	29	28	27	26	25	24
	ADDOFF[19:12]							
Access	R	R	R	R	R	R	R	R
Reset	x	x	x	x	x	x	x	x

Bit	23	22	21	20	19	18	17	16
	ADDOFF[11:4]							
Access	R	R	R	R	R	R	R	R
Reset	x	x	x	x	x	x	x	x

Bit	15	14	13	12	11	10	9	8
	ADDOFF[3:0]							
Access	R	R	R	R				
Reset	x	x	x	x				

Bit	7	6	5	4	3	2	1	0
							FMT	EPRES
Access							R	R
Reset							1	x

Bits 31:12 – ADDOFF[19:0] Address Offset
The base address of the component, relative to the base address of this ROM table.

Bit 1 – FMT Format
Always read as '1', indicating a 32-bit ROM table.

Bit 0 – EPRES Entry Present
This bit indicates whether an entry is present at this location in the ROM table.
This bit is set at power-up if the device is not protected indicating that the entry is not present.
This bit is cleared at power-up if the device is not protected indicating that the entry is present.

© 2025 Microchip Technology Inc. and its subsidiaries

10.13.12. CoreSight ROM Table End

Name: END
Offset: 0x1008
Reset: 0x00000000
Property: -

Table 10-19. Register Bit Attribute Legend

Symbol	Description	Symbol	Description	Symbol	Description
R	Readable bit	**HC**	Cleared by Hardware	(Grey cell)	Unimplemented
W	Writable bit	**HS**	Set by Hardware	**X**	Bit is unknown at Reset
K	Write to clear	**S**	Software settable bit	—	—

Bit	31	30	29	28	27	26	25	24
	END[31:24]							
Access	R	R	R	R	R	R	R	R
Reset	0	0	0	0	0	0	0	0

Bit	23	22	21	20	19	18	17	16
	END[23:16]							
Access	R	R	R	R	R	R	R	R
Reset	0	0	0	0	0	0	0	0

Bit	15	14	13	12	11	10	9	8
	END[15:8]							
Access	R	R	R	R	R	R	R	R
Reset	0	0	0	0	0	0	0	0

Bit	7	6	5	4	3	2	1	0
	END[7:0]							
Access	R	R	R	R	R	R	R	R
Reset	0	0	0	0	0	0	0	0

Bits 31:0 – END[31:0] End Marker
Indicates the end of the CoreSight ROM table entries.

© 2025 Microchip Technology Inc. and its subsidiaries

10.13.13. CoreSight ROM Table Memory Type

Name: MEMTYPE
Offset: 0x1FCC
Reset: 0x0000000X
Property: -

Table 10-20. Register Bit Attribute Legend

Symbol	Description	Symbol	Description	Symbol	Description
R	Readable bit	**HC**	Cleared by Hardware	(Grey cell)	Unimplemented
W	Writable bit	**HS**	Set by Hardware	**X**	Bit is unknown at Reset
K	Write to clear	**S**	Software settable bit	—	—

Bit	31	30	29	28	27	26	25	24
Access								
Reset								

Bit	23	22	21	20	19	18	17	16
Access								
Reset								

Bit	15	14	13	12	11	10	9	8
Access								
Reset								

Bit	7	6	5	4	3	2	1	0
								SMEMP
Access								R
Reset								x

Bit 0 – SMEMP System Memory Present

This bit indicates whether system memory is present on the bus that connects to the ROM table.
This bit is set at power-up if the device is not protected, indicating that the system memory is accessible from a debug adapter.
This bit is cleared at power-up if the device is protected, indicating that the system memory is not accessible from a debug adapter.

© 2025 Microchip Technology Inc. and its subsidiaries

10.13.14. Peripheral Identification 4

Name: PID4
Offset: 0x1FD0
Reset: 0x00000000
Property: -

Table 10-21. Register Bit Attribute Legend

Symbol	Description	Symbol	Description	Symbol	Description
R	Readable bit	**HC**	Cleared by Hardware	(Grey cell)	Unimplemented
W	Writable bit	**HS**	Set by Hardware	**X**	Bit is unknown at Reset
K	Write to clear	**S**	Software settable bit	—	—

Bit	31	30	29	28	27	26	25	24
Access								
Reset								

Bit	23	22	21	20	19	18	17	16
Access								
Reset								

Bit	15	14	13	12	11	10	9	8
Access								
Reset								

Bit	7	6	5	4	3	2	1	0
	FKBC[3:0]				JEPCC[3:0]			
Access	R	R	R	R	R	R	R	R
Reset	0	0	0	0	0	0	0	0

Bits 7:4 – FKBC[3:0] 4KB Count
These bits will always return zero when read, indicating that this debug component occupies one 4KB block.

Bits 3:0 – JEPCC[3:0] JEP-106 Continuation Code
These bits will always return zero when read.

© 2025 Microchip Technology Inc. and its subsidiaries

10.13.15. Peripheral Identification 0

Name: PID0
Offset: 0x1FE0
Reset: 0x00000000
Property: -

Table 10-22. Register Bit Attribute Legend

Symbol	Description	Symbol	Description	Symbol	Description
R	Readable bit	**HC**	Cleared by Hardware	(Grey cell)	Unimplemented
W	Writable bit	**HS**	Set by Hardware	**X**	Bit is unknown at Reset
K	Write to clear	**S**	Software settable bit	—	—

Bit	31	30	29	28	27	26	25	24
Access								
Reset								

Bit	23	22	21	20	19	18	17	16
Access								
Reset								

Bit	15	14	13	12	11	10	9	8
Access								
Reset								

Bit	7	6	5	4	3	2	1	0
	PARTNBL[7:0]							
Access	R	R	R	R	R	R	R	R
Reset	0	0	0	0	0	0	0	0

Bits 7:0 – PARTNBL[7:0] Part Number Low
These bits will always return 0xD0 when read, indicating that this device implements a DSU module instance.

© 2025 Microchip Technology Inc. and its subsidiaries

10.13.16. Peripheral Identification 1

Name: PID1
Offset: 0x1FE4
Reset: 0x000000FC
Property: -

Table 10-23. Register Bit Attribute Legend

Symbol	Description	Symbol	Description	Symbol	Description
R	Readable bit	**HC**	Cleared by Hardware	(Grey cell)	Unimplemented
W	Writable bit	**HS**	Set by Hardware	**X**	Bit is unknown at Reset
K	Write to clear	**S**	Software settable bit	—	—

Bit	31	30	29	28	27	26	25	24
Access								
Reset								

Bit	23	22	21	20	19	18	17	16
Access								
Reset								

Bit	15	14	13	12	11	10	9	8
Access								
Reset								

Bit	7	6	5	4	3	2	1	0
	JEPIDCL[3:0]				PARTNBH[3:0]			
Access	R	R	R	R	R	R	R	R
Reset	1	1	1	1	1	1	0	0

Bits 7:4 – JEPIDCL[3:0] Low Part of the JEP-106 Identity Code
These bits will always return 0xF when read (JEP-106 identity code is 0x1F).

Bits 3:0 – PARTNBH[3:0] Part Number High
These bits will always return 0xC when read, indicating that this device implements a DSU module instance.

© 2025 Microchip Technology Inc. and its subsidiaries

10.13.17. Peripheral Identification 2

Name: PID2
Offset: 0x1FE8
Reset: 0x00000009
Property: -

Table 10-24. Register Bit Attribute Legend

Symbol	Description	Symbol	Description	Symbol	Description
R	Readable bit	**HC**	Cleared by Hardware	(Grey cell)	Unimplemented
W	Writable bit	**HS**	Set by Hardware	**X**	Bit is unknown at Reset
K	Write to clear	**S**	Software settable bit	—	—

Bit	31	30	29	28	27	26	25	24
Access								
Reset								

Bit	23	22	21	20	19	18	17	16
Access								
Reset								

Bit	15	14	13	12	11	10	9	8
Access								
Reset								

Bit	7	6	5	4	3	2	1	0
	REVISION[3:0]				JEPU	JEPIDCH[2:0]		
Access	R	R	R	R	R	R	R	R
Reset	0	0	0	0	1	0	0	1

Bits 7:4 – REVISION[3:0] Revision Number
Revision of the peripheral. Starts at 0x0 and increments by one at both major and minor revisions.

Bit 3 – JEPU JEP-106 Identity Code is Used
This bit will always return one when read, indicating that JEP-106 code is used.

Bits 2:0 – JEPIDCH[2:0] JEP-106 Identity Code High
These bits will always return 0x1 when read, (JEP-106 identity code is 0x1F).

© 2025 Microchip Technology Inc. and its subsidiaries

10.13.18. Peripheral Identification 3

Name: PID3
Offset: 0x1FEC
Reset: 0x00000000
Property: -

Table 10-25. Register Bit Attribute Legend

Symbol	Description	Symbol	Description	Symbol	Description
R	Readable bit	**HC**	Cleared by Hardware	(Grey cell)	Unimplemented
W	Writable bit	**HS**	Set by Hardware	**X**	Bit is unknown at Reset
K	Write to clear	**S**	Software settable bit	—	—

Bit	31	30	29	28	27	26	25	24
Access								
Reset								

Bit	23	22	21	20	19	18	17	16
Access								
Reset								

Bit	15	14	13	12	11	10	9	8
Access								
Reset								

Bit	7	6	5	4	3	2	1	0
	REVAND[3:0]				CUSMOD[3:0]			
Access	R	R	R	R	R	R	R	R
Reset	0	0	0	0	0	0	0	0

Bits 7:4 – REVAND[3:0] Revision Number
These bits will always return 0x0 when read.

Bits 3:0 – CUSMOD[3:0] ARM CUSMOD
These bits will always return 0x0 when read.

© 2025 Microchip Technology Inc. and its subsidiaries

10.13.19. Component Identification 0

Name: CID0
Offset: 0x1FF0
Reset: 0x0000000D
Property: -

Table 10-26. Register Bit Attribute Legend

Symbol	Description	Symbol	Description	Symbol	Description
R	Readable bit	**HC**	Cleared by Hardware	(Grey cell)	Unimplemented
W	Writable bit	**HS**	Set by Hardware	**X**	Bit is unknown at Reset
K	Write to clear	**S**	Software settable bit	—	—

Bit	31	30	29	28	27	26	25	24
Access								
Reset								

Bit	23	22	21	20	19	18	17	16
Access								
Reset								

Bit	15	14	13	12	11	10	9	8
Access								
Reset								

Bit	7	6	5	4	3	2	1	0
	PREAMBLEB0[7:0]							
Access	R	R	R	R	R	R	R	R
Reset	0	0	0	0	1	1	0	1

Bits 7:0 – PREAMBLEB0[7:0] Preamble Byte 0
These bits will always return 0x0000000D when read.

© 2025 Microchip Technology Inc. and its subsidiaries

10.13.20. Component Identification 1

Name: CID1
Offset: 0x1FF4
Reset: 0x00000010
Property: -

Table 10-27. Register Bit Attribute Legend

Symbol	Description	Symbol	Description	Symbol	Description
R	Readable bit	**HC**	Cleared by Hardware	(Grey cell)	Unimplemented
W	Writable bit	**HS**	Set by Hardware	**X**	Bit is unknown at Reset
K	Write to clear	**S**	Software settable bit	—	—

Bit	31	30	29	28	27	26	25	24
Access								
Reset								

Bit	23	22	21	20	19	18	17	16
Access								
Reset								

Bit	15	14	13	12	11	10	9	8
Access								
Reset								

Bit	7	6	5	4	3	2	1	0
	CCLASS[3:0]				PREAMBLE[3:0]			
Access	R	R	R	R	R	R	R	R
Reset	0	0	0	1	0	0	0	0

Bits 7:4 – CCLASS[3:0] Component Class
These bits will always return 0x1 when read indicating that this ARM CoreSight component is ROM table (refer to the ARM Debug Interface v5 Architecture Specification at http://www.arm.com).

Bits 3:0 – PREAMBLE[3:0] Preamble
These bits will always return 0x00 when read.

© 2025 Microchip Technology Inc. and its subsidiaries

10.13.21. Component Identification 2

Name: CID2
Offset: 0x1FF8
Reset: 0x00000005
Property: -

Table 10-28. Register Bit Attribute Legend

Symbol	Description	Symbol	Description	Symbol	Description
R	Readable bit	**HC**	Cleared by Hardware	(Grey cell)	Unimplemented
W	Writable bit	**HS**	Set by Hardware	**X**	Bit is unknown at Reset
K	Write to clear	**S**	Software settable bit	—	—

Bit	31	30	29	28	27	26	25	24
Access								
Reset								

Bit	23	22	21	20	19	18	17	16
Access								
Reset								

Bit	15	14	13	12	11	10	9	8
Access								
Reset								

Bit	7	6	5	4	3	2	1	0
	PREAMBLEB2[7:0]							
Access	R	R	R	R	R	R	R	R
Reset	0	0	0	0	0	1	0	1

Bits 7:0 – PREAMBLEB2[7:0] Preamble Byte 2
These bits will always return 0x00000005 when read.

© 2025 Microchip Technology Inc. and its subsidiaries

10.13.22. Component Identification 3

Name: CID3
Offset: 0x1FFC
Reset: 0x000000B1
Property: -

Table 10-29. Register Bit Attribute Legend

Symbol	Description	Symbol	Description	Symbol	Description
R	Readable bit	**HC**	Cleared by Hardware	(Grey cell)	Unimplemented
W	Writable bit	**HS**	Set by Hardware	**X**	Bit is unknown at Reset
K	Write to clear	**S**	Software settable bit	—	—

Bit	31	30	29	28	27	26	25	24
Access								
Reset								

Bit	23	22	21	20	19	18	17	16
Access								
Reset								

Bit	15	14	13	12	11	10	9	8
Access								
Reset								

Bit	7	6	5	4	3	2	1	0
	PREAMBLEB3[7:0]							
Access	R	R	R	R	R	R	R	R
Reset	1	0	1	1	0	0	0	1

Bits 7:0 – PREAMBLEB3[7:0] Preamble Byte 3
These bits will always return 0x000000B1 when read.

© 2025 Microchip Technology Inc. and its subsidiaries

11. Clock System

This chapter summarizes the clock distribution and terminology in the PIC32C device. It does not explain every detail of its configuration. For in-depth documentation, see the respective peripherals descriptions and the *Generic Clock* documentation.

11.1. Clock Distribution

Figure 11-1. Clock distribution

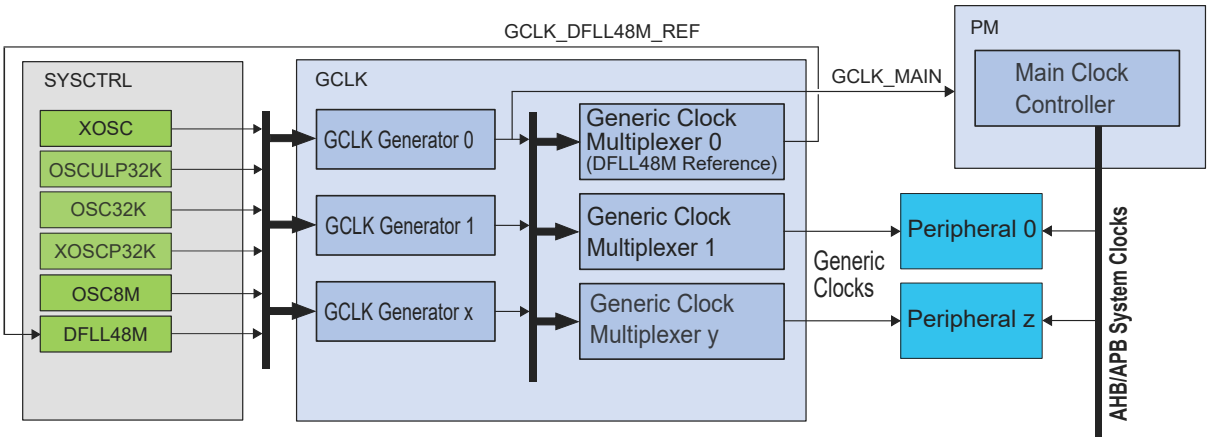

The clock system on the PIC32C consists of the following:

- *Clock sources*, controlled by SYSCTRL
  - A clock source provides a time base that is used by other components, such as Generic Clock Generators. Example clock sources are the internal 8 MHz oscillator (OSC8M), External crystal oscillator (XOSC) and the Digital frequency locked loop (DFLL48M).
- *Generic Clock Controller (GCLK)* which controls the clock distribution system, made up of:
  - *Generic Clock Generators:* These are programmable prescalers that can use any of the system clock sources as a time base. The Generic Clock Generator 0 generates the clock signal GCLK_MAIN, which is used by the Power Manager, which in turn generates synchronous clocks.
  - *Generic Clocks:* These are clock signals generated by Generic Clock Generators and output by the Generic Clock Multiplexer, and serve as clocks for the peripherals of the system. Multiple instances of a peripheral will typically have a separate Generic Clock for each instance. Generic Clock 0 serves as the clock source for the DFLL48M clock input (when multiplying another clock source).
- Power Manager (PM)
  - The PM generates and controls the synchronous clocks on the system. This includes the CPU, bus clocks (APB, AHB) as well as the synchronous (to the CPU) user interfaces of the peripherals. It contains clock masks that can turn on/off the user interface of a peripheral as well as prescalers for the CPU and bus clocks.

The next figure shows an example where SERCOM0 is clocked by the DFLL48M in Open-Loop mode. The DFLL48M is enabled, the Generic Clock Generator 1 uses the DFLL48M as its clock source and feeds into Peripheral Channel 20. The Generic Clock 20, also called GCLK_SERCOM0_CORE, is connected to SERCOM0. The SERCOM0 interface, clocked by CLK_SERCOM0_APB, has been unmasked in the APBC Mask register in the PM.

© 2025 Microchip Technology Inc. and its subsidiaries

Figure 11-2. Example of SERCOM clock

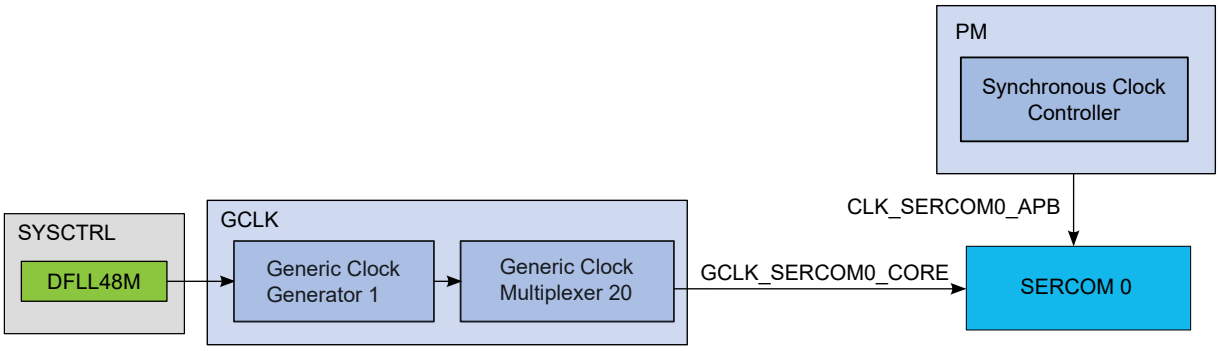

11.2. Synchronous and Asynchronous Clocks

As the CPU and the peripherals can be in different clock domains (i.e., they are clocked from different clock sources and/or with different clock speeds), some peripheral accesses by the CPU need to be synchronized. In this case the peripheral includes a SYNCBUSY Status register that can be used to check if a sync operation is in progress.

For a general description, see Register Synchronization. Some peripherals have specific properties described in their individual sub-chapter “Synchronization”.

In the data sheet, references to Synchronous Clocks are referring to the CPU and bus clocks, while asynchronous clocks are generated by the Generic Clock Controller (GCLK).

11.3. Register Synchronization

There are two different register synchronization schemes implemented on this device: *common synchronizer register synchronization* and *distributed synchronizer register synchronization*.

The modules using a common synchronizer register synchronization are: GCLK, WDT, RTC, EIC, TC, ADC, AC and DAC.

The modules adopting a distributed synchronizer register synchronization are: SERCOM USART, SERCOM SPI, SERCOM I2C.

11.3.1. Common Synchronizer Register Synchronization

11.3.1.1. Overview

All peripherals are composed of one digital bus interface connected to the APB or AHB bus and running from a corresponding clock in the Main Clock domain, and one peripheral core running from the peripheral Generic Clock (GCLK).

Communication between these clock domains must be synchronized. This mechanism is implemented in hardware, so the synchronization process takes place even if the peripheral generic clock is running from the same clock source and on the same frequency as the bus interface.

All registers in the bus interface are accessible without synchronization. All registers in the peripheral core are synchronized when written. Some registers in the peripheral core are synchronized when read. Each individual register description will have the properties "Read-Synchronized" and/or "Write-Synchronized" if a register is synchronized.

As shown in the figure below, the common synchronizer is used for all registers in one peripheral. Therefore, Status register (STATUS) of each peripheral can be synchronized at a time.

© 2025 Microchip Technology Inc. and its subsidiaries

Figure 11-3. Synchronization

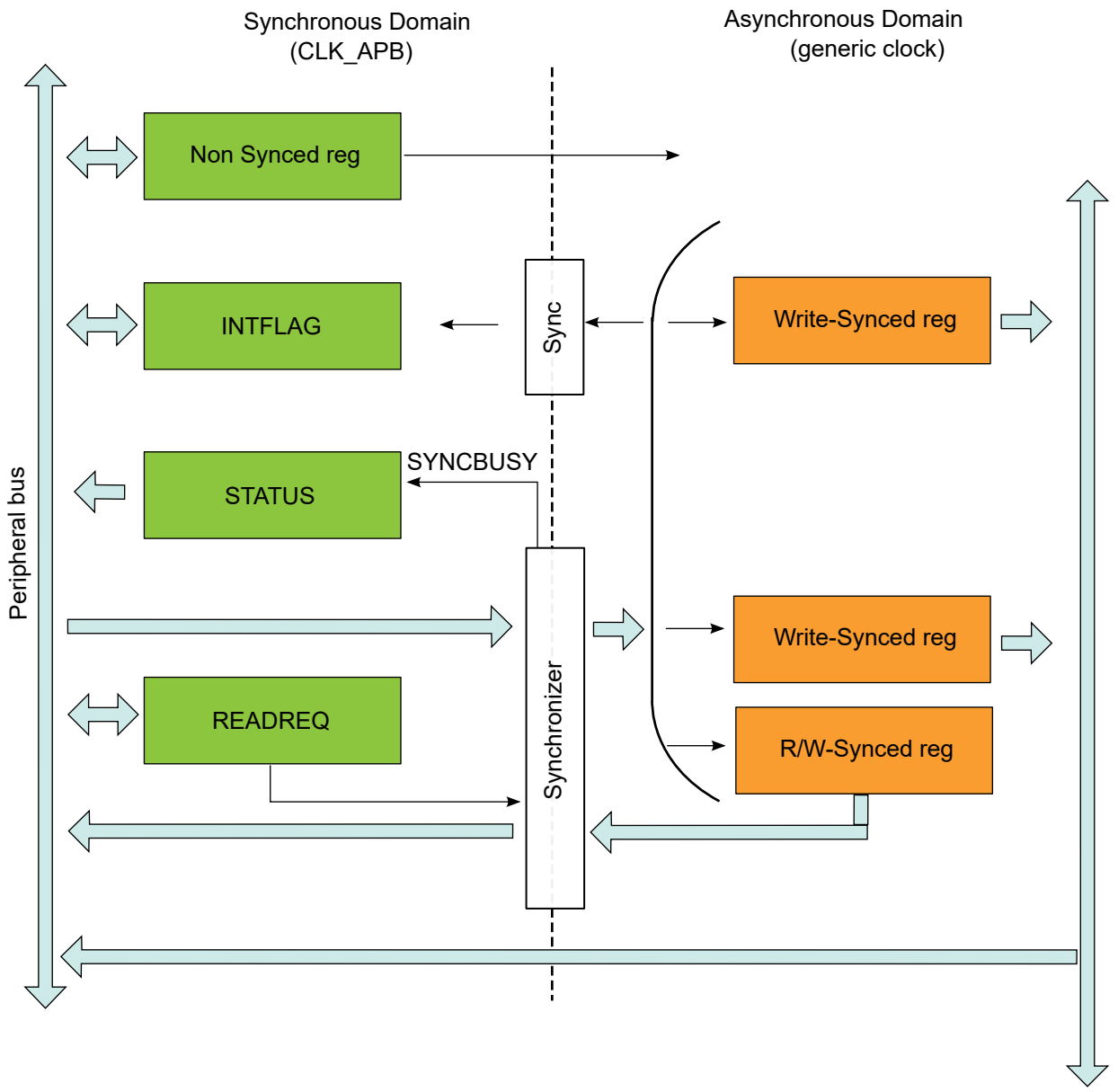

11.3.1.2. Write Synchronization

Write Synchronization is triggered by writing to a register in the peripheral clock domain. The Synchronization Busy bit in the Status register (STATUS.SYNCBUSY) will be set when the write synchronization starts and cleared when the write synchronization is complete. Refer to Synchronization Delay for details on the synchronization delay.

When the write synchronization is ongoing (STATUS.SYNCBUSY is one), any of the following actions will cause the peripheral bus to stall until the synchronization is complete:

- Writing a generic clock Peripheral Core register
- Reading a read synchronized Peripheral Core register
- Reading the register that is being written (and thus triggered the synchronization)

Peripheral Core registers without read synchronization will remain static once they have been written and synchronized, and can be read while the synchronization is ongoing without causing the

© 2025 Microchip Technology Inc. and its subsidiaries

peripheral bus to stall. APB registers can also be read while the synchronization is ongoing without causing the peripheral bus to stall.

11.3.1.3. Read Synchronization

Reading a read-synchronized Peripheral Core register will cause the peripheral bus to stall immediately until the read synchronization is complete. STATUS.SYNCBUSY will not be set. Refer to Synchronization Delay for details on the synchronization delay. Note that reading a read-synchronized Peripheral Core register while STATUS.SYNCBUSY is one will cause the peripheral bus to stall twice; first because of the ongoing synchronization, and then again because reading a Read-synchronized Core register will cause the peripheral bus to stall immediately.

11.3.1.4. Completion of synchronization

The user can either poll STATUS.SYNCBUSY or use the Synchronisation Ready interrupt (if available) to check when the synchronization is complete. It is also possible to perform the next read/write operation and wait, as this next operation will be started once the previous write/read operation is synchronized and/or complete.

11.3.1.5. Read Request

The read request functionality is only available to peripherals that have the Read Request register (READREQ) implemented. Refer to the register description of individual peripheral chapters for details.

To avoid forcing the peripheral bus to stall when reading read-synchronized Peripheral Core registers, the read request mechanism can be used.

Basic Read Request

Writing a '1' to the Read Request bit in the Read Request register (READREQ.RREQ) will request read synchronization of the register specified in the Address bits in READREQ (READREQ.ADDR) and set STATUS.SYNCBUSY. When read synchronization is complete, STATUS.SYNCBUSY is cleared. The read-synchronized value is then available for reading without delay until READREQ.RREQ is written to '1' again.

The address to use is the offset to the peripheral's base address of the register that should be synchronized.

Continuous Read Request

Writing a '1' to the Read Continuously bit in READREQ (READREQ.RCONT) will force continuous read synchronization of the register specified in READREQ.ADDR. The latest value is always available for reading without stalling the bus, as the synchronization mechanism is continuously synchronizing the given value. READREQ.RCONT prevents READREQ.RREQ from clearing automatically. For the continuous read mode, RREQ bit is required to be set once the RCONT bit is set.

SYNCBUSY is set for the first synchronization, but not for the subsequent synchronizations. If another synchronization is attempted, that is by executing a write-operation of a Write-synchronized register), the read request will be stopped, and will have to be manually restarted.

Note:
The continuous read synchronization is paused in sleep modes where the generic clock is not running. This means that a new read request is required if the value is needed immediately after exiting sleep.

11.3.1.6. Enable Write Synchronization

Writing to the Enable bit in the Control register (CTRL.ENABLE) will also trigger write synchronization and set STATUS.SYNCBUSY. CTRL.ENABLE will read its new value immediately after being written. The Synchronisation Ready interrupt (if available) cannot be used for Enable write synchronization.

When the enable write synchronization is ongoing (STATUS.SYNCBUSY is one), attempt to do any of the following will cause the peripheral bus to stall until the enable synchronization is complete:

© 2025 Microchip Technology Inc. and its subsidiaries

- Writing a Peripheral Core register
- Writing an APB register
- Reading a Read-synchronized Peripheral Core register

APB registers can be read while the enable write synchronization is ongoing without causing the peripheral bus to stall.

11.3.1.7. Software Reset Write Synchronization

Writing a '1' to the Software Reset bit in CTRL (CTRL.SWRST) will also trigger write synchronization and set STATUS.SYNCBUSY. When writing a '1' to the CTRL.SWRST bit it will immediately read as '1'. CTRL.SWRST and STATUS.SYNCBUSY will be cleared by hardware when the peripheral has been reset. Writing a zero to the CTRL.SWRST bit has no effect. The Synchronization Ready interrupt (if available) cannot be used for Software Reset write synchronization.

When the software Reset is in progress (STATUS.SYNCBUSY and CTRL.SWRST are '1'), attempt to do any of the following will cause the peripheral bus to stall until the Software Reset synchronization and the Reset is complete:

- Writing a Peripheral Core register
- Writing an APB register
- Reading a Read-synchronized register

APB registers can be read while the software Reset is being write-synchronized without causing the peripheral bus to stall.

11.3.1.8. Synchronization Delay

The synchronization will delay write and read accesses by a certain amount. This delay *D* is within the range of:

$$5 \times P_{\mathrm{GCLK}} + 2 \times P_{\mathrm{APB}} < D < 6 \times P_{\mathrm{GCLK}} + 3 \times P_{\mathrm{APB}}$$

Where P_{GCLK} is the period of the generic clock and P_{APB} is the period of the peripheral bus clock. A normal peripheral bus register access duration is $2 \times P_{\mathrm{APB}}$.

11.3.2. Distributed Synchronizer Register Synchronization

11.3.2.1. Overview

All peripherals are composed of one digital bus interface connected to the APB or AHB bus and running from a corresponding clock in the Main Clock domain, and one peripheral core running from the peripheral Generic Clock (GCLK).

Communication between these clock domains must be synchronized. This mechanism is implemented in hardware, so the synchronization process takes place even if the peripheral generic clock is running from the same clock source and on the same frequency as the bus interface.

All registers in the bus interface are accessible without synchronization. All registers in the peripheral core are synchronized when written. Some registers in the peripheral core are synchronized when read. Registers that need synchronization has this denoted in each individual register description.

11.3.2.2. General Write Synchronization

Write synchronization is triggered by writing to a register in the peripheral clock domain. The respective bit in the Synchronization Busy register (SYNCBUSY) will be set when the write synchronization starts and cleared when the write synchronization is complete. Refer to Synchronization Delay for details on the synchronization delay.

When write synchronization is ongoing for a register, any subsequent write attempts to this register will be discarded, and an error will be reported.

© 2025 Microchip Technology Inc. and its subsidiaries

Example:

REGA, REGB are 8-bit peripheral core registers. REGC is 16-bit peripheral core register.

Offset	Register
0x00	REGA
0x01	REGB
0x02	REGC
0x03	

Synchronization is per register, so multiple registers can be synchronized in parallel. Consequently, after REGA (8-bit access) is written, REGB (8-bit access) can be written immediately without error.

REGC (16-bit access) can be written without affecting REGA or REGB. If REGC is written to in two consecutive 8-bit accesses without waiting for synchronization, the second write attempt will be discarded and an error is generated.

A 32-bit access to offset 0x00 will write all three registers. Note that REGA, REGB and REGC can be updated at different times because of independent write synchronization.

11.3.2.3. General Read Synchronization

Read-synchronized registers are synchronized when the register value is updated. During synchronization the corresponding bit in SYNCBUSY will be set. Reading a Read-synchronized register will return its value immediately and the corresponding bit in SYNCBUSY will not be set.

11.3.2.4. Completion of Synchronization

In order to check if synchronization is complete, the user can either poll the relevant bits in SYNCBUSY or use the Synchronisation Ready interrupt (if available). The Synchronization Ready Interrupt flag will be set when all ongoing synchronizations are complete (i.e., when all bits in SYNCBUSY are '0').

11.3.2.5. Enable Write Synchronization

Setting the Enable bit in a module's Control register (CTRL.ENABLE) will also trigger write synchronization and set SYNCBUSY.ENABLE. CTRL.ENABLE will read its new value immediately after being written. SYNCBUSY.ENABLE will be cleared by hardware when the operation is complete. The Synchronisation Ready interrupt (if available) cannot be used for Enable write synchronization.

11.3.2.6. Software Reset Write Synchronization

Setting the Software Reset bit in CTRLA (CTRLA.SWRST=1) will trigger write synchronization and set SYNCBUSY.SWRST. When writing a '1' to the CTRLA.SWRST bit it will immediately read as '1'. CTRL.SWRST and SYNCBUSY.SWRST will be cleared by hardware when the peripheral has been reset. Writing a '0' to the CTRL.SWRST bit has no effect. The Ready interrupt (if available) cannot be used for Software Reset write synchronization.

11.3.2.7. Synchronization Delay

The synchronization will delay write and read accesses by a certain amount. This delay *D* is within the range of:

$$5 \times P_{\mathrm{GCLK}} + 2 \times P_{\mathrm{APB}} < D < 6 \times P_{\mathrm{GCLK}} + 3 \times P_{\mathrm{APB}}$$

Where P_{GCLK} is the period of the generic clock and P_{APB} is the period of the peripheral bus clock. A normal Peripheral Bus register access duration is $2 \times P_{\mathrm{APB}}$.

11.4. Enabling a Peripheral

In order to enable a peripheral that is clocked by a generic clock, the following parts of the system needs to be configured:

- A running clock source.

© 2025 Microchip Technology Inc. and its subsidiaries

- A clock from the generic clock generator must be configured to use one of the running clock sources, and the generator must be enabled.
- The generic clock multiplexer that provides the generic clock signal to the peripheral must be configured to use a running generic clock generator, and the generic clock must be enabled.
- The user interface of the peripheral needs to be unmasked in the PM. If this is not done the peripheral registers will read all '0's and any writing attempts to the peripheral will be discarded.

11.5. Disabling a Peripheral

When disabling a peripheral and if a pin change interrupt is enabled on pins driven by the respective peripheral, a Wake condition may be generated. If this happen the Interrupt flag will not be set. As a consequence the system will not be able to identify the wake source. To avoid this, the Interrupt Enable register of the peripheral must be cleared (or the Nested Vectored Interrupt Controller (NVIC) Enable for the peripheral must be cleared) before disabling the peripheral.

11.6. On-demand, Clock Requests

Figure 11-4. Clock request routing

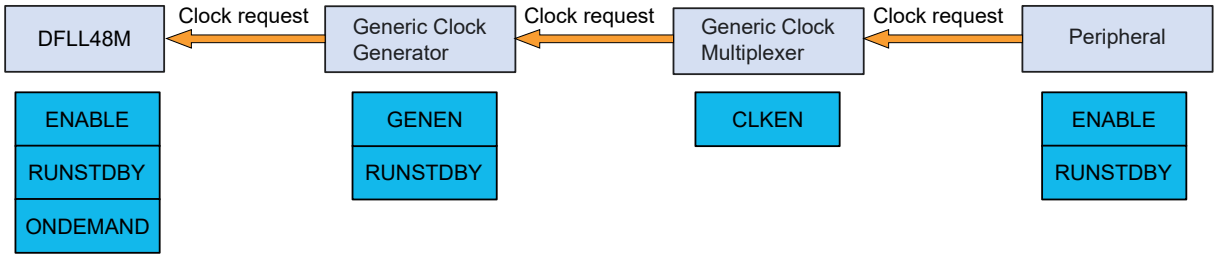

All clock sources in the system can be run in an On-Demand mode: the clock source is in a Stopped state unless a peripheral is requesting the clock source. Clock requests propagate from the peripheral, via the GCLK, to the clock source. If one or more peripheral is using a clock source, the clock source will be started/kept running. As soon as the clock source is no longer needed and no peripheral has an active request, the clock source will be stopped until requested again.

The clock request can reach the clock source only if the peripheral, the generic clock and the clock from the generic clock generator in-between are enabled. The time taken from a clock request being asserted to the clock source being ready is dependent on the clock source start-up time, clock source frequency as well as the divider used in the generic clock generator. The total start-up time Tstart from a clock request until the clock is available for the peripheral is between:

T_{start_max} = Clock source start up time + 2 × clock source periods + 2 × divided clock source periods

T_{start_min} = Clock source start up time + 1 × clock source period + 1 × divided clock source period

The time between the last active clock request stopped and the clock is shut down, T_{stop}, is between:

T_{stop_min} = 1 × divided clock source period + 1 × clock source period

T_{stop_max} = 2 × divided clock source periods + 2 × clock source periods

The On-Demand function can be disabled individually for each clock source by clearing the ONDEMAND bit located in each clock source controller. Consequently, the clock will always run whatever the clock request status is. This has the effect of removing the clock source start-up time at the cost of power consumption.

The clock request mechanism can be configured to work in Standby mode by setting the RUNSDTBY bits of the modules, see Figure 11-4.

© 2025 Microchip Technology Inc. and its subsidiaries

11.7. Power Consumption vs. Speed

When targeting for either a low-power or a fast acting system, some considerations have to be taken into account due to the nature of the asynchronous clocking of the peripherals:

If clocking a peripheral with a very low clock, the active power consumption of the peripheral will be lower. At the same time the synchronization to the synchronous (CPU) clock domain is dependent on the peripheral clock speed, and will take longer with a slower peripheral clock. This will cause worse response times and longer synchronization delays.

11.8. Clocks After Reset

On any Reset the synchronous clocks start to their initial state:

- OSC8M is enabled and divided by 8
- Generic Generator 0 uses OSC8M as source and generates GCLK_MAIN
- CPU and BUS clocks are undivided

On a Power-on Reset, the GCLK module starts to its initial state:

- All generic clock generators are disabled except
  - Generator 0 is using OSC8M as source without division and generates GCLK_MAIN
  - Generator 2 uses OSCULP32K as source without division
- All generic clocks are disabled except:
  - WDT generic clock uses the Generator 2 as source

On a User Reset the GCLK module starts to its initial state, except for:

- Generic clocks that are write-locked (i.e., the according WRTLOCK is set to '1' prior to Reset or WDT generic clock if the WDT Always-On at power-on bit is set in the NVM User Row)
- Generic clock is dedicated to the RTC if the RTC generic clock is enabled

On any Reset the clock sources are reset to their initial state except the 32 kHz clock sources that are reset only by a Power-on Reset.

© 2025 Microchip Technology Inc. and its subsidiaries

12. GCLK - Generic Clock Controller

12.1. Overview

Depending on the application, peripherals may require specific clock frequencies to operate correctly. The Generic Clock controller GCLK provides nine generic clock generators that can provide a wide range of clock frequencies.

Generators can be set to use different external and internal oscillators as source. The clock of each generator can be divided. The outputs from the generators are used as sources for the generic clock multiplexers, which provide the Generic Clock (GCLK_PERIPHERAL) to the peripheral modules, as shown in the Generic Clock Controller Block Diagram. The number of peripheral clocks depends on how many peripherals the device has.
Note: The Generator 0 is always the direct source of the GCLK_MAIN signal.

12.2. Features

- Provides Generic Clocks
- Wide frequency range
- Clock source for the generator can be changed on the fly

12.3. Block Diagram

The generation of Peripheral Clock signals (GCLK_PERIPHERAL) and the Main Clock (GCLK_MAIN) can be seen in the figure below.

Figure 12-1. Device Clocking Diagram

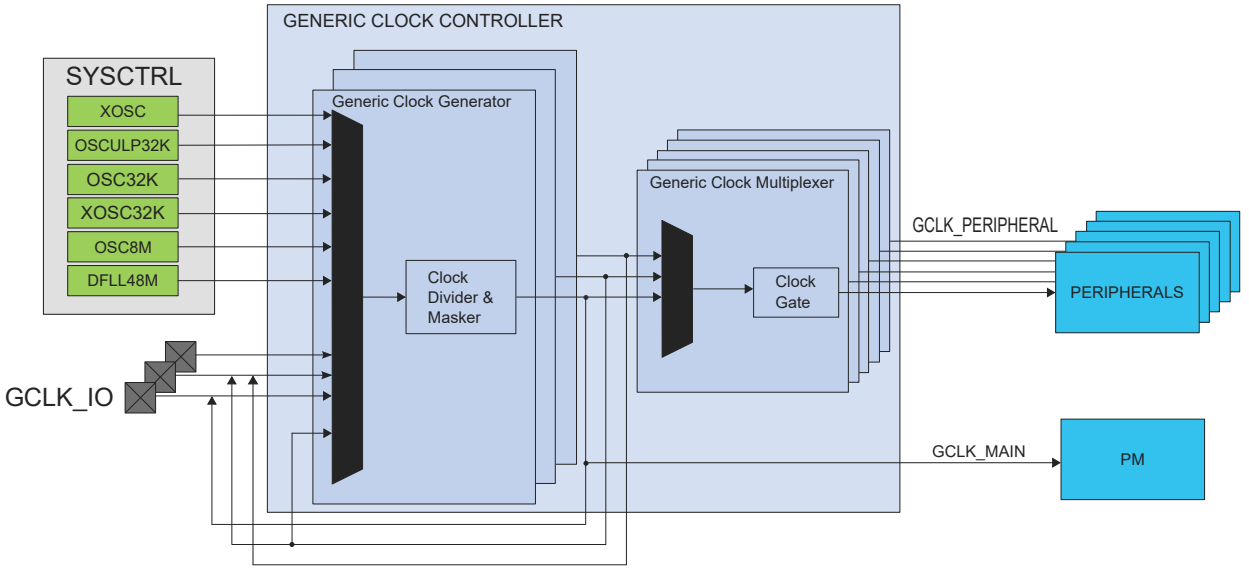

© 2025 Microchip Technology Inc. and its subsidiaries

Figure 12-2. Generic Clock Controller Block Diagram[1]

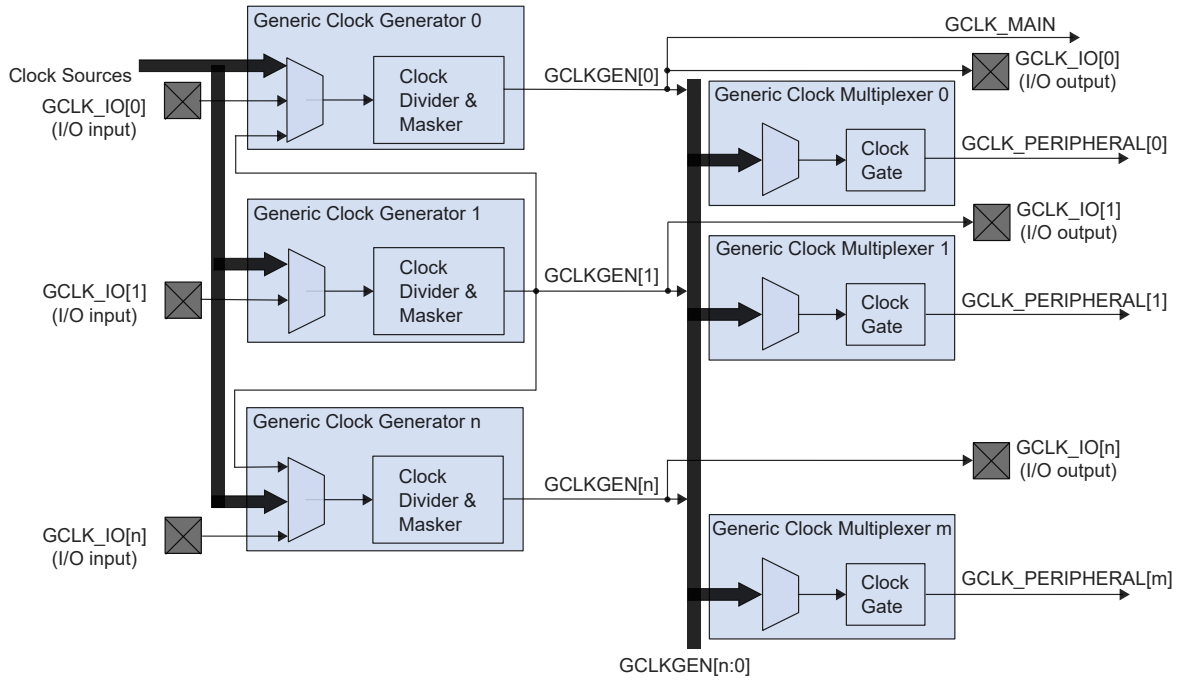

Note: 1. If GENCTRL.SRC=0x01(GCLKIN), the GCLK_IO is set as an input.

12.4. Signal Description

Table 12-1. Signal Description

Signal Name	Type	Description
GCLK_IO[7:0]	Digital I/O	Clock source for Generators when input Generic Clock signal when output

Refer to PORT Function Multiplexing table in I/O Multiplexing and Considerations for details on the pin mapping for this peripheral.
Note: One signal can be mapped on several pins.

12.5. Peripheral Dependencies

Table 12-2. Peripherals Configuration Summary

Peripheral Name	Base Address	IRQ Line	AHB Clock		APB Clock		Generic Clock	PAC		Events		
			Index	Enabled at Reset	Index	Enabled at Reset	Index	Index	Prot at Reset	User	Generator	SleepWalking
GCLK	0x40000C00				3	Y		3	N			Y

12.5.1. I/O Lines

Using the GCLK I/O lines requires the I/O pins to be configured.

12.5.2. Power Management

The GCLK can operate in sleep modes, if required. Refer to the Sleep mode description in the Power Manager (PM) section.

12.5.3. Clocks

The GCLK bus clock (CLK_GCLK_APB) can be enabled and disabled in the Power Manager, and the default state of CLK_GCLK_APB can be found in the Peripheral Clock Masking section of PM – Power Manager.

© 2025 Microchip Technology Inc. and its subsidiaries

12.5.4. Interrupts

Not applicable.

12.5.5. Events

Not applicable.

12.5.6. Debug Operation

Not applicable.

12.5.7. Register Access Protection

All registers with write access can be optionally write-protected by the Peripheral Access Controller (PAC).

Note: Optional write protection is indicated by the "PAC Write Protection" property in the register description.

Write protection does not apply for accesses through an external debugger.

12.5.8. Analog Connections

Not applicable.

12.6. Functional Description

12.6.1. Principle of Operation

The GCLK module is comprised of eight generic clock generators (generators) sourcing m generic clock multiplexers.

A clock source selected as input to a generator can either be used directly, or it can be prescaled in the generator. A generator output is used as input to one or more the generic clock multiplexers to provide a peripheral (GCLK_PERIPHERAL). A generic clock can act as the clock to one or several of peripherals.

12.6.2. Basic Operation

12.6.2.1. Initialization

Before a generator is enabled, the corresponding clock source should be enabled. The peripheral clock must be configured as outlined by the following steps:

1. The generic clock generator division factor must be set by performing a single 32-bit write to the Generic Clock Generator Division register (GENDIV):
   - The generic clock generator that will be selected as the source of the generic clock by setting the ID bit group (GENDIV.ID).
   - The division factor must be selected by the DIV bit group (GENDIV.DIV)
     Note: Refer to *Generic Clock Generator Division register (GENDIV)* for details.
2. The generic clock generator must be enabled by performing a single 32-bit write to the Generic Clock Generator Control register (GENCTRL):
   - The generic clock generator will be selected as the source of the generic clock by the ID bit group (GENCTRL.ID)
   - The generic clock generator must be enabled (GENCTRL.GENEN=1)
     Note: Refer to *Generic Clock Generator Control register (GENCTRL)* for details.
3. The generic clock must be configured by performing a single 16-bit write to the Generic Clock Control register (CLKCTRL):
   - The generic clock that will be configured via the ID bit group (CLKCTRL.ID)

© 2025 Microchip Technology Inc. and its subsidiaries

– The generic clock generator used as the source of the generic clock by writing the GEN bit group (CLKCTRL.GEN)
Note: Refer to *Generic Clock Control register (CLKCTRL)* for details.

12.6.2.2. Enabling, Disabling and Resetting

The GCLK module has no enable/disable bit to enable or disable the whole module.

The GCLK is reset by setting the Software Reset bit in the Control register (CTRL.SWRST) to '1'. All registers in the GCLK will be reset to their initial state, except for generic clocks multiplexer and associated generators that have their Write Lock bit set to '1' (CLKCTRL.WRTLOCK). For further details, refer to Configuration Lock.

12.6.2.3. Generic Clock Generator

Each generator (GCLK_GEN) can be set to run from one of eight different clock sources except GCLKGEN[1], which can be set to run from one of seven sources. GCLKGEN[1] is the only generator that can be selected as source to other generators but can not act as source to itself.

Each generator GCLKGEN[x] can be connected to one specific pin GCLK_IO[x]. The GCLK_IO[x] can be set to act as source to GCLKGEN[x] or GCLK_IO[x] can be set up to output the clock generated by GCLKGEN[x].

The selected source can be divided. Each generator can be enabled or disabled independently.

Each GCLKGEN clock signal can then be used as clock source for generic clock multiplexers. Each generator output is allocated to one or several peripherals.

GCLKGEN[0], is used as GCLK_MAIN for the synchronous clock controller inside the Power Manager.

Refer to *PM-Power Manager* for details on the synchronous clock generation.

Figure 12-3. Generic Clock Generator

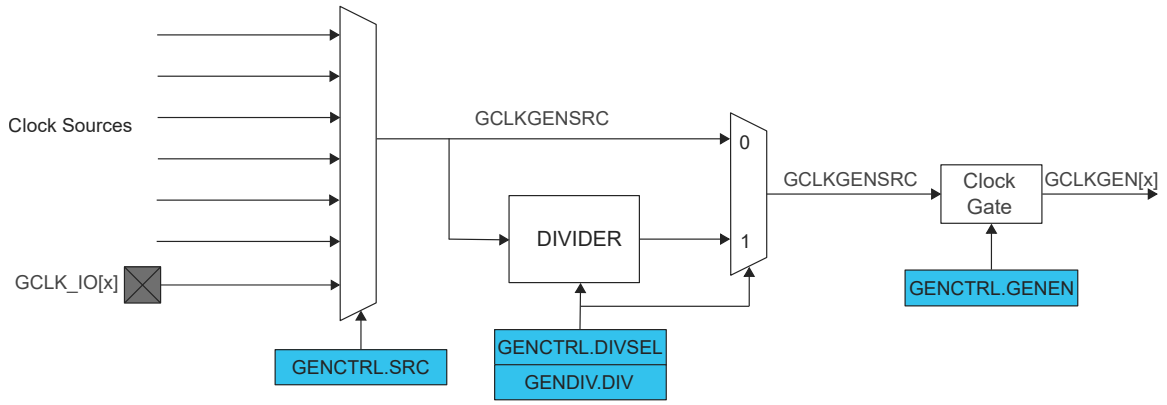

12.6.2.4. Enabling a Generic Clock Generator

A generator is enabled by setting the Generic Clock Generator Enable bit in the Generic Clock Generator Control register (GENCTRL.GENEN=1).

12.6.2.5. Disabling a Generic Clock Generator

A generator is disabled by clearing GENCTRL.GENEN. When GENCTRL.GENEN=0, the GCLKGEN clock is disabled and clock gated.

12.6.2.6. Selecting a Clock Source for the Generic Clock Generator

Each generator can individually select a clock source by setting the Source Select bit group in GENCTRL (GENCTRL.SRC).

Changing from one clock source, for example A, to another clock source, B, can be done on the fly: If clock source B is not ready, the generator will continue running with clock source A. As soon as

© 2025 Microchip Technology Inc. and its subsidiaries

clock source B is ready, however, the generic clock generator will switch to it. During the switching operation, the generator holds clock requests to clock sources A and B and then releases the clock source A request when the switch is done.

The available clock sources are device dependent (usually the crystal oscillators, RC oscillators, PLL and DFLL). Only GCLKGEN[1] can be used as a common source for all other generators except Generator 1.

Note: Before switching the generic clock Generator 0 (GCLKGEN0) from a clock source A to another clock source B, enable the "ONDEMAND" feature of the clock source A to ensure a proper transition from clock source A to clock source B.

12.6.2.7. Changing Clock Frequency

The selected source (GENCLKSRC) for a generator can be divided by writing a division value in the Division Factor bit group in the Generic Clock Generator Division register (GENDIV.DIV). How the actual division factor is calculated is depending on the Divide Selection bit in GENCTRL (GENCTRL.DIVSEL), it can be interpreted in two ways by the integer divider.

Note: The number of DIV bits for each generator is device dependent.

12.6.2.8. Duty Cycle

When dividing a clock with an odd division factor, the duty cycle will not be 50/50. Writing the Improve Duty Cycle bit in GENCTRL (GENCTRL.IDC=1) will result in a 50/50 duty cycle.

12.6.2.9. Generic Clock Output on I/O Pins

Each generator's output can be directed to a GCLK_IO pin. If the Output Enable bit in GENCTRL is '1' (GENCTRL.OE=1) and the generator is enabled (GENCTRL.GENEN=1), the generator requests its clock source and the GCLKGEN clock is output to a GCLK_IO pin. If GENCTRL.OE=0, GCLK_IO is set according to the Output Off Value bit. If the Output Off Value bit in GENCTRL (GENCTRL.OOV) is zero, the output clock will be low when generic clock generator is turned off. If GENCTRL.OOV=1, the output clock will be high when generator is turned off.

In Standby mode, if the clock is output (GENCTRL.OE=1), the clock on the GCLK_IO pin is frozen to the OOV value if the Run In Standby bit in GENCTRL (GENCTRL.RUNSTDBY) is zero. If GENCTRL.RUNSTDBY=1, the GCLKGEN clock is kept running and output to GCLK_IO.

12.6.3. Generic Clock

Figure 12-4. Generic Clock Multiplexer

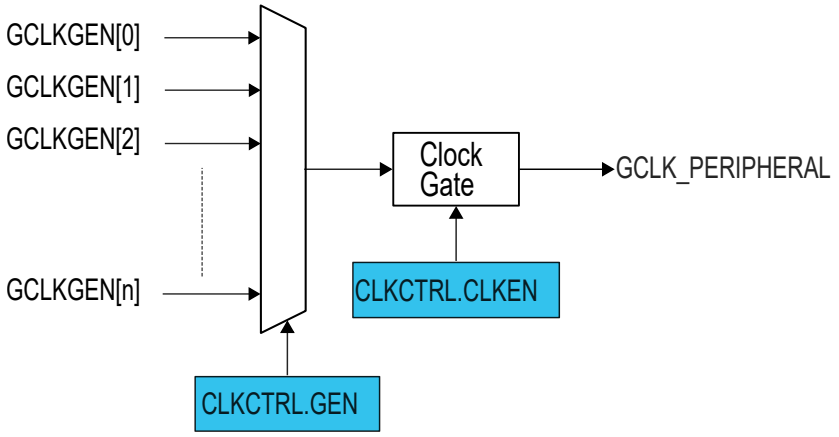

12.6.3.1. Enabling a Generic Clock

Before a generic clock is enabled, one of the generators must be selected as the source for the generic clock by writing to CLKCTRL.GEN. The clock source selection is individually set for each generic clock.

© 2025 Microchip Technology Inc. and its subsidiaries

When a generator has been selected, the generic clock is enabled by setting the Clock Enable bit in CLKCTRL (CLKCTRL.CLKEN=1). The CLKCTRL.CLKEN bit must be synchronized to the generic clock domain. CLKCTRL.CLKEN will continue to read as its previous state until the synchronization is complete.

12.6.3.2. Disabling a Generic Clock

A generic clock is disabled by writing CLKCTRL.CLKEN=0. The SYNCBUSY bit will be cleared when this write synchronization is complete. CLKCTRL.CLKEN will stay in its previous state until the synchronization is complete. The generic clock is gated when disabled.

12.6.3.3. Selecting a Clock Source for the Generic Clock

When changing a generic clock source by writing to CLKCTRL.GEN, the generic clock must be disabled before being re-enabled with the new clock source setting. This prevents glitches during the transition:

1. Write CLKCTRL.CLKEN=0
2. Assert that CLKCTRL.CLKEN reads '0'
3. Change the source of the generic clock by writing CLKCTRL.GEN
4. Re-enable the generic clock by writing CLKCTRL.CLKEN=1

12.6.3.4. Configuration Lock

The generic clock configuration can be locked for further write accesses by setting the Write Lock bit in the CLKCTRL register (CLKCTRL.WRTLOCK). All writes to the CLKCTRL register will be ignored. It can only be unlocked by a Power Reset.

The generator source of a locked generic clock is also locked. The corresponding GENCTRL and GENDIV are locked and can be unlocked only by a Power Reset.

There is one exception concerning the GCLKGEN[0]. As it is used as GCLK_MAIN, it cannot be locked. It is reset by any Reset and will start up in a known configuration. The Software Reset (CTRL.SWRST) cannot unlock the registers.

12.6.4. Additional Features

12.6.4.1. Indirect Access

The Generic Clock Generator Control and Division registers (GENCTRL and GENDIV) and the Generic Clock Control register (CLKCTRL) are indirectly addressed as shown in the next figure.

Figure 12-5. GCLK Indirect Access

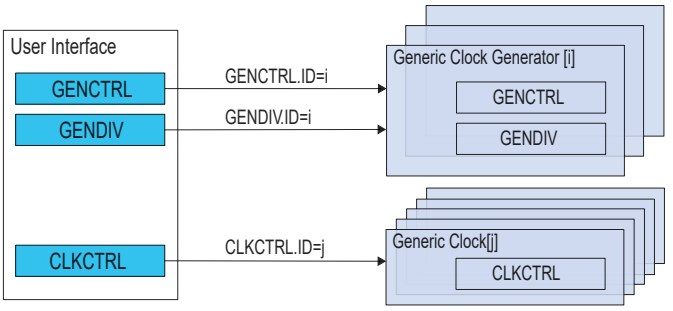

Writing these registers is done by setting the corresponding ID bit group. To read a register, the user must write the ID of the channel, i, in the corresponding register. The value of the register for the corresponding ID is available in the user interface by a read access.

For example, the sequence to read the GENCTRL register of generic clock generator i is:

© 2025 Microchip Technology Inc. and its subsidiaries

1. Do an 8-bit write of the i value to GENCTRL.ID
2. Read the value of GENCTRL

12.6.4.2. Generic Clock Enable after Reset

The generic clock controller must be able to provide a generic clock to some specific peripherals after a Reset. That means that the configuration of the generators and generic clocks after Reset is device-dependent.

Refer to *GENCTRL.ID* for details on GENCTRL Reset.

Refer to *GENDIV.ID* for details on GENDIV Reset.

Refer to *CLKCTRL.ID* for details on CLKCTRL Reset.

12.6.5. Sleep Mode Operation

12.6.5.1. Sleep Walking

The GCLK module supports the Sleep Walking feature. If the system is in a Sleep mode where the generic clocks are stopped, a peripheral that needs its clock in order to execute a process must request it from the generic clock controller.

The generic clock controller receives this request, determines which generic clock generator is involved and which clock source needs to be awakened. It then wakes up the respective clock source, enables the generator and generic clock stages successively, and delivers the clock to the peripheral.

12.6.5.2. Run in Standby Mode

In Standby mode, the GCLK can continuously output the generator output to GCLK_IO.

When set, the GCLK can continuously output the generator output to GCLK_IO.

Refer to Generic Clock Output on I/O Pins for details.

12.6.6. Synchronization

Due to asynchronicity between the main clock domain and the peripheral clock domains, some registers need to be synchronized when written or read.

When executing an operation that requires synchronization, the Synchronization Busy bit in the Status register (STATUS.SYNCBUSY) will be set immediately, and cleared when synchronization is complete.

If an operation that requires synchronization is executed while STATUS.SYNCBUSY=`1`, the bus will be stalled. All operations will complete successfully, but the CPU will be stalled and interrupts will be pending as long as the bus is stalled.

The following registers are synchronized when written:

- Generic Clock Generator Control register (GENCTRL)
- Generic Clock Generator Division register (GENDIV)
- Control register (CTRL)

Required write synchronization is denoted by the "Write-Synchronized" property in the register description.

© 2025 Microchip Technology Inc. and its subsidiaries

12.7. Register Summary Register Summary

Offset	Name	Bit Pos.	7	6	5	4	3	2	1	0
0x00	CTRL	7:0								SWRST
0x01	STATUS	7:0	SYNCBUSY							
0x02	CLKCTRL	7:0			ID[5:0]					
		15:8	WRTLOCK	CLKEN			GEN[3:0]			
0x04	GENCTRL	7:0					ID[3:0]			
		15:8				SRC[4:0]				
		23:16			RUNSTDBY	DIVSEL	OE	OOV	IDC	GENEN
		31:24								
0x08	GENDIV	7:0					ID[3:0]			
		15:8	DIV[7:0]							
		23:16	DIV[15:8]							
		31:24								

© 2025 Microchip Technology Inc. and its subsidiaries

12.7.1. Control

Name: CTRL
Offset: 0x0
Reset: 0x00
Property: Write-Protected, Write-Synchronized

Table 12-3. Register Bit Attribute Legend

Symbol	Description	Symbol	Description	Symbol	Description
R	Readable bit	**HC**	Cleared by Hardware	(Grey cell)	Unimplemented
W	Writable bit	**HS**	Set by Hardware	**X**	Bit is unknown at Reset
K	Write to clear	**S**	Software settable bit	—	—

Bit	7	6	5	4	3	2	1	0
								SWRST
Access								R/W
Reset								0

Bit 0 – SWRST Software Reset

Writing a zero to this bit has no effect.
Writing a one to this bit resets all registers in the GCLK to their initial state after a Power Reset, except for generic clocks and associated generators that have their WRTLOCK bit in CLKCTRL read as one.
Refer to *GENCTRL.ID* for details on GENCTRL Reset.
Refer to *GENDIV.ID* for details on GENDIV Reset.
Refer to *CLKCTRL.ID* for details on CLKCTRL Reset.
Due to synchronization, there is a delay from writing CTRL.SWRST until the Reset is complete. CTRL.SWRST and STATUS.SYNCBUSY will both be cleared when the Reset is complete.

Value	Description
0	There is no Reset operation ongoing
1	There is a Reset operation ongoing

© 2025 Microchip Technology Inc. and its subsidiaries

12.7.2. Status

Name: STATUS
Offset: 0x1
Reset: 0x00
Property: -

Table 12-4. Register Bit Attribute Legend

Symbol	Description	Symbol	Description	Symbol	Description
R	Readable bit	**HC**	Cleared by Hardware	(Grey cell)	Unimplemented
W	Writable bit	**HS**	Set by Hardware	**X**	Bit is unknown at Reset
K	Write to clear	**S**	Software settable bit	—	—

Bit	7	6	5	4	3	2	1	0
	SYNCBUSY							
Access	R							
Reset	0							

Bit 7 – SYNCBUSY Synchronization Busy Status
This bit is cleared when the synchronization of registers between the clock domains is complete.
This bit is set when the synchronization of registers between clock domains is started.

© 2025 Microchip Technology Inc. and its subsidiaries

12.7.3. Generic Clock Control

Name: CLKCTRL
Offset: 0x2
Reset: 0x0000
Property: Write-Protected

Table 12-5. Register Bit Attribute Legend

Symbol	Description	Symbol	Description	Symbol	Description
R	Readable bit	**HC**	Cleared by Hardware	(Grey cell)	Unimplemented
W	Writable bit	**HS**	Set by Hardware	**X**	Bit is unknown at Reset
K	Write to clear	**S**	Software settable bit	—	—

Bit	15	14	13	12	11	10	9	8
	WRTLOCK	CLKEN			GEN[3:0]			
Access	R/W	R/W			R/W	R/W	R/W	R/W
Reset	0	0			0	0	0	0

Bit	7	6	5	4	3	2	1	0
			ID[5:0]					
Access			R/W	R/W	R/W	R/W	R/W	R/W
Reset			0	0	0	0	0	0

Bit 15 – WRTLOCK Write Lock

When this bit is written, it will lock from further writes the generic clock pointed to by CLKCTRL.ID, the generic clock generator pointed to in CLKCTRL.GEN and the division factor used in the generic clock generator. It can only be unlocked by a power reset.
One exception to this is generic clock generator 0, which cannot be locked.

Value	Description
0	The generic clock and the associated generic clock generator and division factor are not locked.
1	The generic clock and the associated generic clock generator and division factor are locked.

Bit 14 – CLKEN Clock Enable

This bit is used to enable and disable a generic clock.

Value	Description
0	The generic clock is disabled.
1	The generic clock is enabled.

Bits 11:8 – GEN[3:0] Generic Clock Generator

Table 12-6. Generic Clock Generator

GEN[3:0]	Name	Description
0x0	GCLKGEN0	Generic clock generator 0
0x1	GCLKGEN1	Generic clock generator 1
0x2	GCLKGEN2	Generic clock generator 2
0x3	GCLKGEN3	Generic clock generator 3
0x4	GCLKGEN4	Generic clock generator 4
0x5	GCLKGEN5	Generic clock generator 5
0x6	GCLKGEN6	Generic clock generator 6
0x7	GCLKGEN7	Generic clock generator 7
0x8-0xF	Reserved	Reserved

© 2025 Microchip Technology Inc. and its subsidiaries

Bits 5:0 – ID[5:0] Generic Clock Selection ID

These bits select the generic clock that will be configured. The value of the ID bit group versus module instance is shown in the table below.

A power reset will reset the CLKCTRL register for all IDs, including the RTC. If the WRTLOCK bit of the corresponding ID is zero and the ID is not the RTC, a user reset will reset the CLKCTRL register for this ID.

After a power reset, the reset value of the CLKCTRL register versus module instance is as shown in the next table.

Table 12-7. Generic Clock Selection ID and CLKCTRL value after Power Reset

Module Instance	Reset Value after Power Reset		
	CLKCTRL.GEN	CLKCTRL.CLKEN	CLKCTRL.WRTLOCK
RTC	0x00	0x00	0x00
WDT	0x02	0x01 if WDT Enable bit in NVM User Row written to one 0x00 if WDT Enable bit in NVM User Row written to zero	0x01 if WDT Always-On bit in NVM User Row written to one 0x00 if WDT Always-On bit in NVM User Row written to zero
Others	0x00	0x00	0x00

After a user reset, the reset value of the CLKCTRL register versus module instance is as shown in the table below.

Table 12-8. Generic Clock Selection ID and CLKCTRL Value after User Reset

Module Instance	Reset Value after a User Reset		
	CLKCTRL.GEN	CLCTRL.CLKEN	CLKCTRL.WRTLOCK
RTC	0x00 if WRTLOCK=0 and CLKEN=0 No change if WRTLOCK=1 or CLKEN=1	0x00 if WRTLOCK=0 and CLKEN=0 No change if WRTLOCK=1 or CLKEN=1	No change
WDT	0x02 if WRTLOCK=0 No change if WRTLOCK=1	If WRTLOCK=0 0x01 if WDT Enable bit in NVM User Row written to one 0x00 if WDT Enable bit in NVM User Row written to zero If WRTLOCK=1 no change	No change
Others	0x00 if WRTLOCK=0 No change if WRTLOCK=1	0x00 if WRTLOCK=0 No change if WRTLOCK=1	No change

Value	Name	Description
0x00	GCLK_DFLL48M_REF	DFLL48M Reference
0x01	GCLK_WDT	WDT
0x02	GCLK_RTC	RTC
0x03	GCLK_EIC	EIC
0x04	GCLK_EVSYS_CHANNEL_0	EVSYS_CHANNEL_0
0x05	GCLK_EVSYS_CHANNEL_1	EVSYS_CHANNEL_1
0x06	GCLK_EVSYS_CHANNEL_2	EVSYS_CHANNEL_2
0x07	GCLK_EVSYS_CHANNEL_3	EVSYS_CHANNEL_3
0x08	GCLK_EVSYS_CHANNEL_4	EVSYS_CHANNEL_4
0x09	GCLK_EVSYS_CHANNEL_5	EVSYS_CHANNEL_5
0x0A	GCLK_EVSYS_CHANNEL_6	EVSYS_CHANNEL_6
0x0B	GCLK_EVSYS_CHANNEL_7	EVSYS_CHANNEL_7
0x0C	GCLK_SERCOMx_SLOW	SERCOMx_SLOW
0x0D	GCLK_SERCOM0_CORE	SERCOM0_CORE
0x0E	GCLK_SERCOM1_CORE	SERCOM1_CORE
0x0F	GCLK_SERCOM2_CORE	SERCOM2_CORE
0x10	GCLK_SERCOM3_CORE	SERCOM3_CORE
0x11	GCLK_SERCOM4_CORE	SERCOM4_CORE
0x12	GCLK_SERCOM5_CORE	SERCOM5_CORE

© 2025 Microchip Technology Inc. and its subsidiaries

Value	Name	Description
0x13	GCLK_TC0, GCLK_TC1	TC0, TC1
0x14	GCLK_TC2, GCLK_TC3	TC2, TC3
0x15	GCLK_TC4, GCLK_TC5	TC4, TC5
0x16	GCLK_TC6, GCLK_TC7	TC6, TC7
0x17	GCLK_ADC	ADC
0x18	GCLK_AC_DIG	AC_DIG
0x19	GCLK_AC_ANA	AC_ANA
0x1A	GCLK_DAC	DAC
0x1B	GCLK_PTC	PTC
0x1C-0x3F	-	Reserved

© 2025 Microchip Technology Inc. and its subsidiaries

12.7.4. Generic Clock Generator Control

Name: GENCTRL
Offset: 0x4
Reset: 0x00000000
Property: Write-Protected, Write-Synchronized

Bit	31	30	29	28	27	26	25	24
Access								
Reset								

Bit	23	22	21	20	19	18	17	16
			RUNSTDBY	DIVSEL	OE	OOV	IDC	GENEN
Access			R/W	R/W	R/W	R/W	R/W	R/W
Reset			0	0	0	0	0	0

Bit	15	14	13	12	11	10	9	8
				SRC[4:0]				
Access				R/W	R/W	R/W	R/W	R/W
Reset				0	0	0	0	0

Bit	7	6	5	4	3	2	1	0
					ID[3:0]			
Access					R/W	R/W	R/W	R/W
Reset					0	0	0	0

Bit 21 – RUNSTDBY Run in Standby

This bit is used to keep the generic clock generator running when it is configured to be output to its dedicated GCLK_IO pin. If GENCTRL.OE is zero, this bit has no effect and the generic clock generator will only be running if a peripheral requires the clock.

Value	Description
0	The generic clock generator is stopped in standby and the GCLK_IO pin state (one or zero) will be dependent on the setting in GENCTRL.OOV.
1	The generic clock generator is kept running and output to its dedicated GCLK_IO pin during standby mode.

Bit 20 – DIVSEL Divide Selection

This bit is used to decide how the clock source used by the generic clock generator will be divided. If the clock source should not be divided, the DIVSEL bit must be zero and the GENDIV.DIV value for the corresponding generic clock generator must be zero or one.

Value	Description
0	The generic clock generator equals the clock source divided by GENDIV.DIV.
1	The generic clock generator equals the clock source divided by 2^(GENDIV.DIV+1).

Bit 19 – OE Output Enable

This bit is used to enable output of the generated clock to GCLK_IO when GCLK_IO is not selected as a source in the GENCLK.SRC bit group.

Value	Description
0	The generic clock generator is not output.
1	The generic clock generator is output to the corresponding GCLK_IO, unless the corresponding GCLK_IO is selected as a source in the GENCLK.SRC bit group.

© 2025 Microchip Technology Inc. and its subsidiaries

Bit 18 – OOV Output Off Value

This bit is used to control the value of GCLK_IO when GCLK_IO is not selected as a source in the GENCLK.SRC bit group.

Value	Description
0	The GCLK_IO will be zero when the generic clock generator is turned off or when the OE bit is zero.
1	The GCLK_IO will be one when the generic clock generator is turned off or when the OE bit is zero.

Bit 17 – IDC Improve Duty Cycle

This bit is used to improve the duty cycle of the generic clock generator when odd division factors are used.

Value	Description
0	The generic clock generator duty cycle is not 50/50 for odd division factors.
1	The generic clock generator duty cycle is 50/50.

Bit 16 – GENEN Generic Clock Generator Enable

This bit is used to enable and disable the generic clock generator.

Value	Description
0	The generic clock generator is disabled.
1	The generic clock generator is enabled.

Bits 12:8 – SRC[4:0] Source Select

These bits define the clock source to be used as the source for the generic clock generator, as shown in the table below.

Value	Name	Description
0x00	XOSC	XOSC oscillator output
0x01	GCLKIN	Generator input pad
0x02	GCLKGEN1	Generic clock generator 1 output
0x03	OSCULP32K	OSCULP32K oscillator output
0x04	OSC32K	OSC32K oscillator output
0x05	XOSC32K	XOSC32K oscillator output
0x06	OSC8M	OSC8M oscillator output
0x07	DFLL48M	DFLL48M output
0x08-0x1F	Reserved	Reserved for future use

Bits 3:0 – ID[3:0] Generic Clock Generator Selection

These bits select the generic clock generator that will be configured or read. The value of the ID bit group versus which generic clock generator is configured is shown in the next table.
A power reset will reset the GENCTRL register for all IDs, including the generic clock generator used by the RTC. If a generic clock generator ID other than generic clock generator 0 is not a source of a "locked" generic clock or a source of the RTC generic clock, a user reset will reset the GENCTRL for this ID.

Values	Names	Description
0x0	GCLKGEN0	Generic clock generator 0
0x1	GCLKGEN0	Generic clock generator 0
0x2	GCLKGEN0	Generic clock generator 0
0x3	GCLKGEN0	Generic clock generator 0
0x4	GCLKGEN0	Generic clock generator 0
0x5	GCLKGEN0	Generic clock generator 0
0x6	GCLKGEN0	Generic clock generator 0
0x7	GCLKGEN0	Generic clock generator 0
0x8-0xF	-	Reserved for future use

© 2025 Microchip Technology Inc. and its subsidiaries

After a power reset, the reset value of the GENCTRL register is as shown in the next table.

GCLK Generator ID	Reset Value after a Power Reset
0x00	0x00010600
0x01	0x00000001
0x02	0x00010302
0x03	0x00000003
0x04	0x00000004
0x05	0x00000005
0x06	0x00000006
0x07	0x00000007

After a user reset, the reset value of the GENCTRL register is as shown in the table below.

GCLK Generator ID	Reset Value after a User Reset
0x00	0x00010600
0x01	0x00000001 if the generator is not used by the RTC and not a source of a 'locked' generic clock No change if the generator is used by the RTC or used by a GCLK with a WRTLOCK as one
0x02	0x00010302 if the generator is not used by the RTC and not a source of a 'locked' generic clock No change if the generator is used by the RTC or used by a GCLK with a WRTLOCK as one
0x03	0x00000003 if the generator is not used by the RTC and not a source of a 'locked' generic clock No change if the generator is used by the RTC or used by a GCLK with a WRTLOCK as one
0x04	0x00000004 if the generator is not used by the RTC and not a source of a 'locked' generic clock No change if the generator is used by the RTC or used by a GCLK with a WRTLOCK as one
0x05	0x00000005 if the generator is not used by the RTC and not a source of a 'locked' generic clock No change if the generator is used by the RTC or used by a GCLK with a WRTLOCK as one
0x06	0x00000006 if the generator is not used by the RTC and not a source of a 'locked' generic clock No change if the generator is used by the RTC or used by a GCLK with a WRTLOCK as one
0x07	0x00000007 if the generator is not used by the RTC and not a source of a 'locked' generic clock No change if the generator is used by the RTC or used by a GCLK with a WRTLOCK as one

© 2025 Microchip Technology Inc. and its subsidiaries

12.7.5. Generic Clock Generator Division

Name: GENDIV
Offset: 0x8
Reset: 0x00000000
Property: Write-Synchronized

Table 12-9. Register Bit Attribute Legend

Symbol	Description	Symbol	Description	Symbol	Description
R	Readable bit	**HC**	Cleared by Hardware	(Grey cell)	Unimplemented
W	Writable bit	**HS**	Set by Hardware	**X**	Bit is unknown at Reset
K	Write to clear	**S**	Software settable bit	—	—

Bit	31	30	29	28	27	26	25	24
Access								
Reset								

Bit	23	22	21	20	19	18	17	16
	DIV[15:8]							
Access	R/W	R/W	R/W	R/W	R/W	R/W	R/W	R/W
Reset	0	0	0	0	0	0	0	0

Bit	15	14	13	12	11	10	9	8
	DIV[7:0]							
Access	R/W	R/W	R/W	R/W	R/W	R/W	R/W	R/W
Reset	0	0	0	0	0	0	0	0

Bit	7	6	5	4	3	2	1	0
					ID[3:0]			
Access					R/W	R/W	R/W	R/W
Reset					0	0	0	0

Bits 23:8 – DIV[15:0] Division Factor
These bits apply a division on each selected generic clock generator. The number of DIV bits each generator has can be seen in the table below. Writes to bits above the specified number will be ignored.

Generator	Division Factor Bits	Maximum Division Factor
Generic clock generator 0	8 division factor bits - DIV[7:0]	512
Generic clock generator 1	16 division factor bits - DIV[15:0]	131072
Generic clock generators 2	5 division factor bits - DIV[4:0]	64
Generic clock generators 3-8	8 division factor bits - DIV[7:0]	512

Bits 3:0 – ID[3:0] Generic Clock Generator Selection
These bits select the generic clock generator on which the division factor will be applied, as shown in the table below.

Values	Description
0x0	Generic clock generator 0
0x1	Generic clock generator 1
0x2	Generic clock generator 2
0x3	Generic clock generator 3
0x4	Generic clock generator 4

© 2025 Microchip Technology Inc. and its subsidiaries

ID (continued)	
Values	Description
0x5	Generic clock generator 5
0x6	Generic clock generator 6
0x7	Generic clock generator 7
0x8-0xF	Reserved

A power reset will reset the GENDIV register for all IDs, including the generic clock generator used by the RTC. If a generic clock generator ID, other than generic clock generator '0', is not a source of locked generic clock or a source of the RTC generic clock. A user reset will reset the GENDIV register for this ID. After a power reset, the reset value of the GENDIV register is as shown in the table below.

GCLK Generator ID	Reset Value after a Power Reset
0x00	0x00000000
0x01	0x00000001
0x02	0x00000002
0x03	0x00000003
0x04	0x00000004
0x05	0x00000005
0x06	0x00000006
0x07	0x00000007

After a user reset, the reset value of the GENDIV register is as shown in the table below.

GCLK Generator ID	Reset Value after a User Reset
0x00	0x00000000
0x01	0x00000001, if the generator is not used by the RTC and not a source of locked generic clock . No change if the generator is used by the RTC or used by a GCLK with a WRTLOCK as one.
0x02	0x00000002, if the generator is not used by the RTC and not a source of locked generic clock. No change if the generator is used by the RTC or used by a GCLK with a WRTLOCK as one.
0x03	0x00000003, if the generator is not used by the RTC and not a source of locked generic clock . No change if the generator is used by the RTC or used by a GCLK with a WRTLOCK as one.
0x04	0x00000004, if the generator is not used by the RTC and not a source of locked generic clock . No change if the generator is used by the RTC or used by a GCLK with a WRTLOCK as one.
0x05	0x00000005, if the generator is not used by the RTC and not a source of locked generic clock . No change if the generator is used by the RTC or used by a GCLK with a WRTLOCK as one.
0x06	0x00000006, if the generator is not used by the RTC and not a source of locked generic clock . No change if the generator is used by the RTC or used by a GCLK with a WRTLOCK as one.
0x07	0x00000007, if the generator is not used by the RTC and not a source of locked generic clock . No change if the generator is used by the RTC or used by a GCLK with a WRTLOCK as one.

© 2025 Microchip Technology Inc. and its subsidiaries

13. PM - Power Manager

13.1. Features

The following are key features of the Power Manager module:

- Reset Control
  - Reset the microcontroller and set it to an initial state according to the Reset source
  - Multiple Reset sources
    - Power Reset sources: POR, BOD12, BOD33
    - User Reset sources: External Reset ($\overline{\text{RESET}}$), Watchdog Timer Reset, Software Reset
  - Reset Status register for reading the Reset source from the application code
- Clock Control
  - Controls CPU, AHB and APB system clocks
    - Multiple clock sources and division factor from GCLK
    - Clock prescaler with 1x to 128x division
  - Safe run-time clock switching from GCLK
  - Module-level clock gating through maskable peripheral clocks
- Power Management Control
  - Sleep modes: Idle, Standby
  - SleepWalking support on GCLK clocks

13.1.1. Overview

The Power Manager (PM) controls the Reset, clock generation and sleep modes of the device.

Utilizing a main clock chosen from a large number of clock sources from the GCLK, the clock controller provides synchronous system clocks to the CPU and the modules connected to the AHB and the APBx bus. The synchronous system clocks are divided into a number of clock domains; one for the CPU and AHB and one for each APBx. Any synchronous system clock can be changed at run-time during normal operation. The clock domains can run at different speeds, enabling the user to save power by running peripherals at a relatively low clock frequency, while maintaining high CPU performance. In addition, the clock can be masked for individual modules, enabling the user to minimize power consumption. If for some reason the main clock stops oscillating, the clock failure detector allows switching the main clock to the safe OSC8M clock.

Before entering the Standby Sleep mode the user must make sure that a significant amount of clocks and peripherals are disabled, so that the voltage regulator is not overloaded. This is because during Standby Sleep mode the internal voltage regulator will be in Low-Power mode.

Various sleep modes are provided in order to fit power consumption requirements. This enables the PM to stop unused modules in order to save power. In Active mode, the CPU is executing application code. When the device enters a Sleep mode, program execution is stopped and some modules and clock domains are automatically switched off by the PM according to the Sleep mode. The application code decides which Sleep mode to enter and when. Interrupts from enabled peripherals and all enabled Reset sources can restore the device from a Sleep mode to Active mode.

The PM also contains a Reset controller to collect all possible Reset sources. It issues a device Reset and sets the device to its initial state, and allows the Reset source to be identified by software.

© 2025 Microchip Technology Inc. and its subsidiaries

13.2. Block Diagram

Figure 13-1. PM Block Diagram

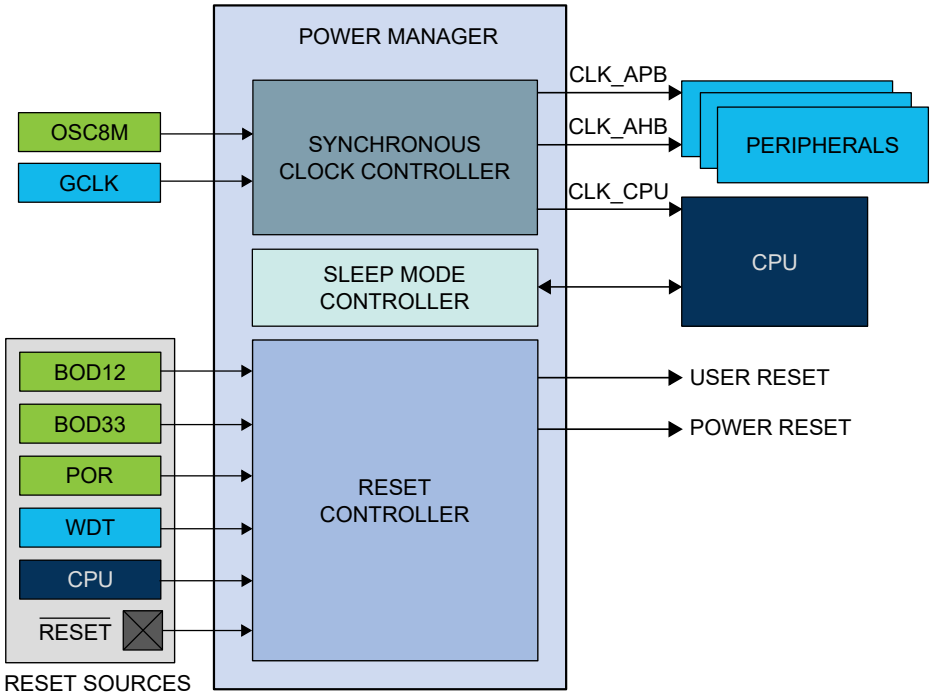

13.3. Signal Description

Signal Name	Type	Description
$\overline{\text{RESET}}$	Digital input	External Reset

Refer to *I/O Multiplexing and Considerations* for details on the pin mapping for this peripheral. One signal can be mapped on several pins.

13.4. Peripheral Dependencies

Table 13-1. Peripherals Configuration Summary

Peripheral Name	Base Address	IRQ Line	AHB Clock		APB Clock		Generic Clock	PAC		Events		
			Index	Enabled at Reset	Index	Enabled at Reset	Index	Index	Prot at Reset	User	Generator	SleepWalking
PM	0x40000400	0			1	Y		1	N			Y

13.4.1. I/O Lines

Not applicable.

13.4.2. Power Management

Not applicable.

13.4.3. Clocks

The PM bus clock (CLK_PM_APB) can be enabled and disabled in the Power Manager, and the default state of CLK_PM_APB can be found in the *Peripheral Clock Default State* table in the *Peripheral Clock Masking* section. If this clock is disabled in the Power Manager, it can only be re-enabled by a Reset.

© 2025 Microchip Technology Inc. and its subsidiaries

A generic clock (GCLK_MAIN) is required to generate the main clock. The clock source for GCLK_MAIN is configured by default in the generic clock controller, and can be reconfigured by the user if needed. Refer to *GCLK – Generic Clock Controller* for details.

13.4.3.1. Main Clock

The main clock (CLK_MAIN) is the common source for the synchronous clocks. This is fed into the common 8-bit prescaler that is used to generate synchronous clocks to the CPU, AHB and APBx modules.

13.4.3.2. CPU Clock

The CPU clock (CLK_CPU) is routed to the CPU. Halting the CPU clock inhibits the CPU from executing instructions.

13.4.3.3. AHB Clock

The AHB clock (CLK_AHB) is the root clock source used by peripherals requiring an AHB clock. The AHB clock is always synchronous to the CPU clock and has the same frequency, but may run even when the CPU clock is turned off. A clock gate is inserted from the common AHB clock to any AHB clock of a peripheral.

13.4.3.4. APBx Clocks

The APBx clock (CLK_APBX) is the root clock source used by modules requiring a clock on the APBx bus. The APBx clock is always synchronous to the CPU clock, but can be divided by a prescaler, and will run even when the CPU clock is turned off. A clock gater is inserted from the common APB clock to any APBx clock of a module on APBx bus.

13.4.4. Interrupts

The interrupt request line is connected to the Interrupt Controller. Using the PM interrupt requires the Interrupt Controller to be configured first. Refer to *Nested Vector Interrupt Controller* for details.

13.4.5. Events

Not applicable.

13.4.6. Debug Operation

When the CPU is halted in Debug mode, the PM continues normal operation. In Sleep mode, the clocks generated from the PM are kept running to allow the debugger accessing any modules. As a consequence, power measurements are not possible in Debug mode.

13.4.7. Register Access Protection

Registers with write access can be optionally write-protected by the Peripheral Access Controller (PAC), except for the following:

- Interrupt Flag register (INTFLAG).
- Reset Cause register (RCAUSE).

Note: Optional write protection is indicated by the "PAC Write Protection" property in the register description.

Write-protection does not apply for accesses through an external debugger. Refer to *PAC – Peripheral Access Controller* for details.

13.4.8. Analog Connections

Not applicable.

© 2025 Microchip Technology Inc. and its subsidiaries

13.5. Functional Description

13.5.1. Principle of Operation

13.5.1.1. Synchronous Clocks

The GCLK_MAIN clock from the GCLK module provides the source for the main clock, which is the common root for the synchronous clocks for the CPU and APBx modules. The main clock is divided by an 8-bit prescaler, and each of the derived clocks can run from any tapping off this prescaler or the undivided main clock, as long as $f_{CPU} \geq f_{APBx}$. The synchronous clock source can be changed on the fly to respond to varying load in the application. The clocks for each module in each synchronous clock domain can be individually masked to avoid power consumption in inactive modules. Depending on the Sleep mode, some clock domains can be turned off (see Table 13-5).

13.5.1.2. Reset Controller

The Reset Controller collects the various Reset sources and generates a Reset for the device. The device contains a Power-on-Reset (POR) detector, which keeps the system Reset until power is stable. This eliminates the need for external Reset circuitry to ensure stable operation when powering up the device.

13.5.1.3. Sleep Mode Controller

In Active mode, all clock domains are active, allowing software execution and peripheral operation. The PM Sleep Mode Controller allows the user to choose between different sleep modes depending on application requirements, to save power (see Table 13-5).

13.5.2. Basic Operation

13.5.2.1. Initialization

After a Power-on Reset (POR), the PM is enabled and the Reset Cause register indicates the POR source (RCAUSE.POR). The default clock source of the GCLK_MAIN clock is started and calibrated before the CPU starts running. The GCLK_MAIN clock is selected as the main clock without any division on the prescaler. The device is in the Active mode.

By default, only the necessary clocks are enabled (see Table 13-2).

13.5.2.2. Enabling, Disabling and Resetting

The PM module is always enabled and can not be reset.

13.5.2.3. Selecting the Main Clock Source

Refer to *GCLK – Generic Clock Controller* for details on how to configure the main clock source.

13.5.2.4. Selecting the Synchronous Clock Division Ratio

The main clock feeds an 8-bit prescaler, which can be used to generate the synchronous clocks. By default, the synchronous clocks run on the undivided main clock. The user can select a prescaler division for the CPU clock by writing the CPU Prescaler Selection bits in the CPU Select register (CPUSEL.CPUDIV), resulting in a CPU clock frequency determined by this equation:

$$f_{\mathrm{CPU}} = \frac{f_{\mathrm{main}}}{2^{\mathrm{CPUDIV}}}$$

Similarly, the clock for the APBx can be divided by writing their respective registers (APBxSEL.APBxDIV). To ensure correct operation, frequencies must be selected so that $f_{CPU} \geq f_{APBx}$. Also, frequencies must never exceed the specified maximum frequency for each clock domain.

Note: The AHB clock is always equal to the CPU clock.

CPUSEL and APBxSEL can be written without halting or disabling peripheral modules. Writing CPUSEL and APBxSEL allows a new clock setting to be written to all synchronous clocks at the same time. It is possible to keep one or more clocks unchanged. This way, it is possible to, for example,

© 2025 Microchip Technology Inc. and its subsidiaries

scale the CPU speed according to the required performance, while keeping the APBx frequency constant.

Figure 13-2. Synchronous Clock Selection and Prescaler

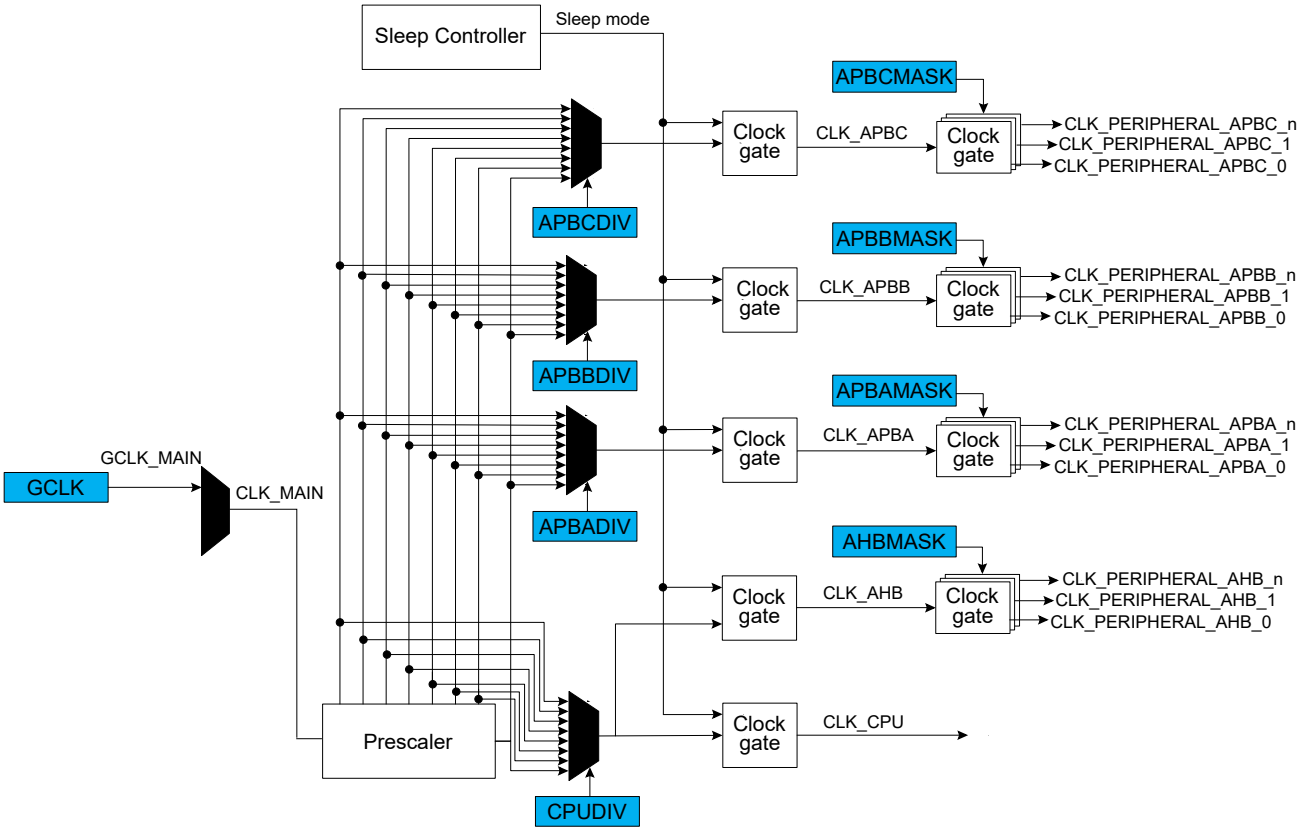

13.5.2.5. Clock Ready Flag

There is a slight delay from when CPUSEL and APBxSEL are written until the new clock setting becomes effective. During this interval, the Clock Ready flag in the Interrupt Flag Status and Clear register (INTFLAG.CKRDY) will read as zero. If CKRDY in the INTENSET register is written to one, the Power Manager interrupt can be triggered when the new clock setting is effective. CPUSEL must not be re-written while CKRDY is zero, or the system may become unstable or hang.

13.5.2.6. Peripheral Clock Masking

It is possible to disable or enable the clock for a peripheral in the AHB or APBx clock domain by writing the corresponding bit in the Clock Mask register (APBxMASK - refer to *APBAMASK* register for details) to zero or one. Refer to the table below for the default state of each of the peripheral clocks.

Table 13-2. Peripheral Clock Default State

Peripheral Clock	Default State
CLK_PAC0_APB	Enabled
CLK_PM_APB	Enabled
CLK_SYSCTRL_APB	Enabled
CLK_GCLK_APB	Enabled
CLK_WDT_APB	Enabled
CLK_RTC_APB	Enabled
CLK_EIC_APB	Enabled
CLK_PAC1_APB	Enabled

© 2025 Microchip Technology Inc. and its subsidiaries

Table 13-2. Peripheral Clock Default State (continued)

Peripheral Clock	Default State
CLK_DSU_APB	Enabled
CLK_NVMCTRL_APB	Enabled
CLK_PORT_APB	Enabled
CLK_PAC2_APB	Disabled
CLK_SERCOMx_APB	Disabled
CLK_TCx_APB	Disabled
CLK_ADC_APB	Enabled
CLK_AC_APB	Disabled
CLK_DAC_APB	Disabled
CLK_PTC_APB	Disabled

When the APB clock for a module is not provided its registers cannot be read or written. The module can be re-enabled later by writing the corresponding mask bit to one.

A module may be connected to several clock domains (for instance, AHB and APB), in which case it will have several mask bits.

Note: Clocks should only be switched off if it is certain that the module will not be used. Switching off the clock for the NVM Controller (NVMCTRL) will cause a problem if the CPU needs to read from the flash memory. Switching off the clock to the Power Manager (PM), which contains the mask registers, or the corresponding APBx bridge, will make it impossible to write the mask registers again. In this case, they can only be re-enabled by a system reset.

13.5.2.7. Reset Controller

The latest Reset cause is available in RCAUSE, and can be read during the application boot sequence in order to determine proper action.

There are two groups of Reset sources:

- Power Reset: Resets caused by an electrical issue.
- User Reset: Resets caused by the application.

The table below lists the parts of the device that are reset, depending on the Reset type.

Table 13-3. Effects of the Different Reset Events

	Power Reset	User Reset	
	POR, BOD12, BOD33	External Reset	WDT Reset, SysResetReq
RTC All the 32 kHz sources WDT with ALWAYSON feature Generic Clock with WRTLOCK feature	Y	N	N
Debug logic	Y	Y	N
Others	Y	Y	Y

The external Reset is generated when pulling the $\overline{\text{RESET}}$ pin low. This pin has an internal pull-up, and does not need to be driven externally during normal operation.

The POR, BOD12 and BOD33 Reset sources are generated by their corresponding module in the System Controller Interface (SYSCTRL).

The WDT Reset is generated by the Watchdog Timer.

The System Reset Request (SysResetReq) is a Software Reset generated by the CPU when asserting the SYSRESETREQ bit located in the Reset Control register of the CPU (See the ARM® Cortex® Technical Reference Manual on http://www.arm.com).

© 2025 Microchip Technology Inc. and its subsidiaries

Figure 13-3. Reset Controller

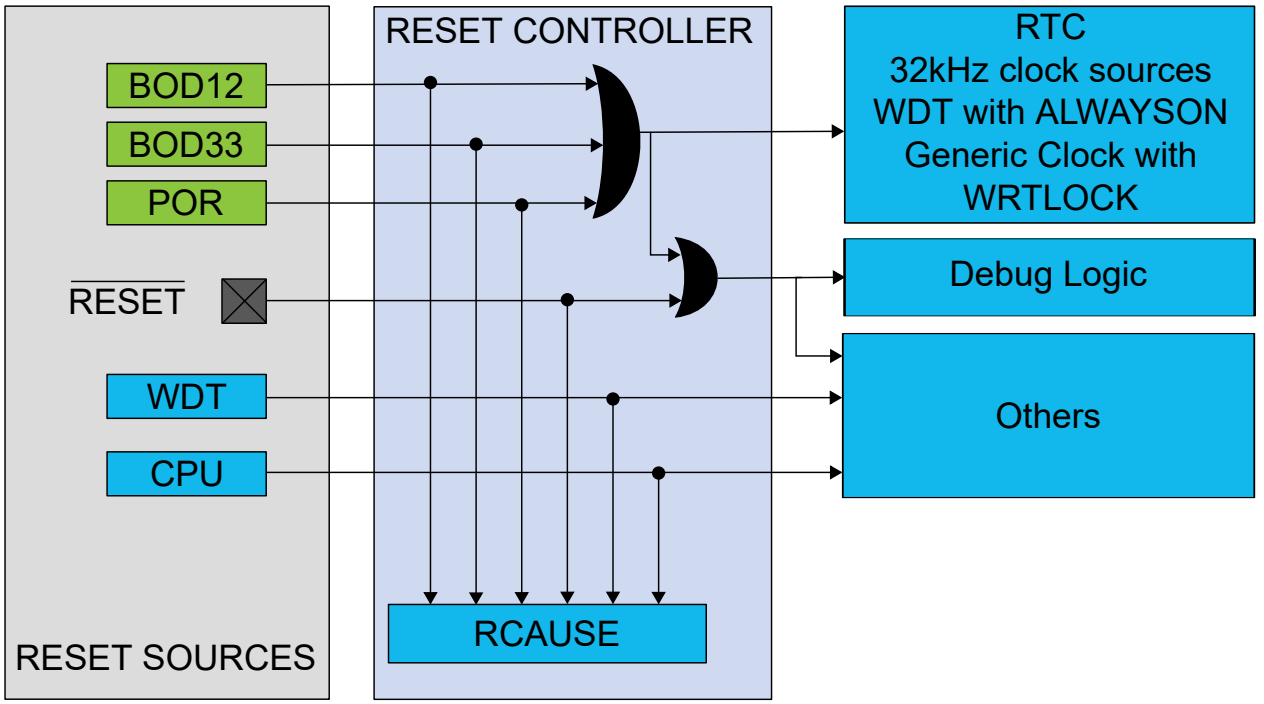

13.5.2.8. Sleep Mode Controller

Sleep mode is activated by the Wait For Interrupt instruction (`WFI`). The Idle bits in the Sleep Mode register (SLEEP.IDLE) and the SLEEPDEEP bit of the System Control register of the CPU should be used as argument to select the level of the Sleep mode.

There are two main types of Sleep mode:

- IDLE mode: The CPU is stopped. Optionally, some synchronous clock domains are stopped, depending on the IDLE argument. Regulator operates in Normal mode.
- STANDBY mode: All clock sources are stopped, except those where the RUNSTDBY bit is set. Regulator operates in Low-Power mode. Before entering Standby mode the user must make sure that a significant amount of clocks and peripherals are disabled, so that the voltage regulator is not overloaded.

Table 13-4. Sleep Mode Entry and Exit Table

Mode	Level	Mode Entry	Wake-Up Sources
IDLE	0	SCR.SLEEPDEEP = `0` SLEEP.IDLE=Level WFI	Synchronous[2] (APB, AHB), asynchronous[1]
	1		Synchronous (APB), asynchronous
	2		Asynchronous
STANDBY		SCR.SLEEPDEEP = `1` WFI	Asynchronous

Notes:

a. Asynchronous: interrupt generated on generic clock or external clock or external event.

b. Synchronous: interrupt generated on the APB clock.

© 2025 Microchip Technology Inc. and its subsidiaries

Table 13-5. Sleep Mode Overview

Sleep Mode	CPU Clock	AHB Clock	APB Clock	Oscillators				Main Clock	Regulator Mode	RAM Mode
				ONDEMAND = 0		ONDEMAND = 1				
				RUNSTDBY=0	RUNSTDBY=1	RUNSTDBY=0	RUNSTDBY=1			
Idle 0	Stop	Run	Run	Run	Run	Run if requested	Run if requested	Run	Normal	Normal
Idle 1	Stop	Stop	Run	Run	Run	Run if requested	Run if requested	Run	Normal	Normal
Idle 2	Stop	Stop	Stop	Run	Run	Run if requested	Run if requested	Run	Normal	Normal
Standby	Stop	Stop	Stop	Stop	Run	Stop	Run if requested	Stop	Low power	Low power

13.5.2.8.1. IDLE Mode

The IDLE modes allow power optimization with the fastest wake-up time.

The CPU is stopped. To further reduce power consumption, the user can disable the clocking of modules and clock sources by configuring the SLEEP.IDLE bit group. The module will be halted regardless of the bit settings of the mask registers in the Power Manager (PM.AHBMASK, PM.APBxMASK).

Regulator operates in Normal mode.

- Entering IDLE mode: The IDLE mode is entered by executing the `WFI` instruction. Additionally, if the SLEEPONEXIT bit in the ARM Cortex System Control register (SCR) is set, the IDLE mode will also be entered when the CPU exits the lowest priority ISR. This mechanism can be useful for applications that only require the processor to run when an interrupt occurs. Before entering the IDLE mode, the user must configure the IDLE mode Configuration bit group and must write a zero to the SCR.SLEEPDEEP bit.
- Exiting IDLE mode: The processor wakes the system up when it detects the occurrence of any interrupt that is not masked in the NVIC Controller with sufficient priority to cause exception entry. The system goes back to the ACTIVE mode. The CPU and affected modules are restarted.

13.5.2.8.2. STANDBY Mode

The STANDBY mode allows achieving very low-power consumption.

In this mode, all clocks are stopped except those which are kept running if requested by a running module or have the ONDEMAND bit set to zero. For example, the RTC can operate in STANDBY mode. In this case, its generic clock clock source will also be enabled.

The regulator and the RAM operate in Low-Power mode and the RAM content is retained.

A SLEEPONEXIT feature is also available.

- Entering STANDBY mode: This mode is entered by executing the `WFI` instruction with the SCR.SLEEPDEEP bit of the CPU is written to 1.
- Exiting STANDBY mode: Any peripheral able to generate an asynchronous interrupt can wake-up the system. For example, a module running on a generic clock can trigger an interrupt. When the enabled asynchronous wake-up event occurs and the system is woken up, the device will either execute the Interrupt Service Routine or continue the normal program execution according to the Priority Mask Register (PRIMASK) configuration of the CPU.

Note: The SYSTICK interrupt must be disabled before entering standby and re-enabled after entering standby.

13.5.3. SleepWalking

SleepWalking is the capability for a device to temporarily wake-up clocks for the peripheral to perform a task without waking-up the CPU in STANDBY Sleep mode. At the end of the SleepWalking task, the device can either be awakened by an interrupt (from a peripheral involved in SleepWalking) or enter into STANDBY Sleep mode again.

In this device, SleepWalking is supported only on GCLK clocks by using the on-demand clock principle of the clock sources. Refer to *On-demand, Clock Requests* for more details.

© 2025 Microchip Technology Inc. and its subsidiaries

13.5.4. Interrupts

The peripheral has the following interrupt sources:

- Clock Ready flag

Each interrupt source has an Interrupt flag associated with it. The Interrupt flag in the Interrupt Flag Status and Clear (INTFLAG) register is set when the Interrupt condition occurs. Each interrupt can be individually enabled by writing a one to the corresponding bit in the Interrupt Enable Set (INTENSET) register, and disabled by writing a one to the corresponding bit in the Interrupt Enable Clear (INTENCLR) register. An interrupt request is generated when the Interrupt flag is set and the corresponding interrupt is enabled. The interrupt request remains active until the Interrupt flag is cleared, the interrupt is disabled or the peripheral is reset. An Interrupt flag is cleared by writing a one to the corresponding bit in the INTFLAG register. Each peripheral can have one interrupt request line per interrupt source or one common interrupt request line for all the interrupt sources. Refer to *Nested Vector Interrupt Controller* for details. If the peripheral has one common interrupt request line for all the interrupt sources, the user must read the INTFLAG register to determine which Interrupt condition is present.

13.5.5. Events

Not applicable.

13.5.6. Sleep Mode Operation

In all IDLE Sleep modes, the power manager is still running on the selected main clock.

In STANDDBY Sleep mode, the power manager is frozen and is able to go back to ACTIVE mode upon any asynchronous interrupt.

Note: Do not make APB read access to read-synchronized registers when APB clock is stopped and GCLK is running. This will cause the system to Freeze. Instead power cycle the device or reset the device using the RESET pin.

© 2025 Microchip Technology Inc. and its subsidiaries

13.6. Register Summary

Offset	Name	Bit Pos.	7	6	5	4	3	2	1	0
0x00	CTRL	7:0				BKUPCLK				
0x01	SLEEP	7:0							IDLE[1:0]	
0x02 ... 0x07	Reserved									
0x08	CPUSEL	7:0						CPUDIV[2:0]		
0x09	APBASEL	7:0						APBADIV[2:0]		
0x0A	APBBSEL	7:0						APBBDIV[2:0]		
0x0B	APBCSEL	7:0						APBCDIV[2:0]		
0x0C ... 0x13	Reserved									
0x14	AHBMASK	7:0				NVMCTRL	DSU	HPB2	HPB1	HPB0
		15:8								
		23:16								
		31:24								
0x18	APBAMASK	7:0		EIC	RTC	WDT	GCLK	SYSCTRL	PM	PAC0
		15:8								
		23:16								
		31:24								
0x1C	APBBMASK	7:0					PORT	NVMCTRL	DSU	PAC1
		15:8								
		23:16								
		31:24								
0x20	APBCMASK	7:0	SERCOM5	SERCOM4	SERCOM3	SERCOM2	SERCOM1	SERCOM0	EVSYS	PAC2
		15:8	TC7	TC6	TC5	TC4	TC3	TC2	TC1	TC0
		23:16					PTC	DAC	AC	ADC
		31:24								
0x24 ... 0x33	Reserved									
0x34	INTENCLR	7:0								CKRDY
0x35	INTENSET	7:0								CKRDY
0x36	INTFLAG	7:0								CKRDY
0x37	Reserved									
0x38	RCAUSE	7:0		SYST	WDT	EXT		BOD33	BOD12	POR

© 2025 Microchip Technology Inc. and its subsidiaries

13.6.1. Control

Name: CTRL
Offset: 0x00
Reset: 0x00
Property: Write-Protected

Table 13-6. Register Bit Attribute Legend

Symbol	Description	Symbol	Description	Symbol	Description
R	Readable bit	**HC**	Cleared by Hardware	(Grey cell)	Unimplemented
W	Writable bit	**HS**	Set by Hardware	**X**	Bit is unknown at Reset
K	Write to clear	**S**	Software settable bit	—	—

Bit	7	6	5	4	3	2	1	0
				BKUPCLK				
Access				R/W				
Reset				0				

Bit 4 – BKUPCLK Backup Clock Select
This bit is set by hardware when a clock failure is detected.

Value	Description
0	The GCLK_MAIN clock is selected for the main clock.
1	The OSC8M backup clock is selected for the main clock.

© 2025 Microchip Technology Inc. and its subsidiaries

13.6.2. Sleep Mode

Name: SLEEP
Offset: 0x01
Reset: 0x00
Property: Write-Protected

Table 13-7. Register Bit Attribute Legend

Symbol	Description	Symbol	Description	Symbol	Description
R	Readable bit	**HC**	Cleared by Hardware	(Grey cell)	Unimplemented
W	Writable bit	**HS**	Set by Hardware	**X**	Bit is unknown at Reset
K	Write to clear	**S**	Software settable bit	—	—

Bit	7	6	5	4	3	2	1	0
							IDLE[1:0]	
Access							R/W	R/W
Reset							0	0

Bits 1:0 – IDLE[1:0] Idle Mode Configuration
These bits select the Idle mode configuration after a `WFI` instruction.

IDLE[1:0]	Name	Description
0x0	CPU	The CPU clock domain is stopped
0x1	AHB	The CPU and AHB clock domains are stopped
0x2	APB	The CPU, AHB and APB clock domains are stopped
0x3		Reserved

© 2025 Microchip Technology Inc. and its subsidiaries

13.6.3. CPU Clock Select

Name: CPUSEL
Offset: 0x08
Reset: 0x00
Property: Write-Protected

Table 13-8. Register Bit Attribute Legend

Symbol	Description	Symbol	Description	Symbol	Description
R	Readable bit	**HC**	Cleared by Hardware	(Grey cell)	Unimplemented
W	Writable bit	**HS**	Set by Hardware	**X**	Bit is unknown at Reset
K	Write to clear	**S**	Software settable bit	—	—

Bit	7	6	5	4	3	2	1	0
						CPUDIV[2:0]		
Access						R/W	R/W	R/W
Reset						0	0	0

Bits 2:0 – CPUDIV[2:0] CPU Prescaler Selection
These bits define the division ratio of the main clock prescaler (2^n).

CPUDIV[2:0]	Name	Description
0x0	DIV1	Divide by 1
0x1	DIV2	Divide by 2
0x2	DIV4	Divide by 4
0x3	DIV8	Divide by 8
0x4	DIV16	Divide by 16
0x5	DIV32	Divide by 32
0x6	DIV64	Divide by 64
0x7	DIV128	Divide by 128

© 2025 Microchip Technology Inc. and its subsidiaries

13.6.4. APBA Clock Select

Name: APBASEL
Offset: 0x09
Reset: 0x00
Property: Write-Protected

Table 13-9. Register Bit Attribute Legend

Symbol	Description	Symbol	Description	Symbol	Description
R	Readable bit	**HC**	Cleared by Hardware	(Grey cell)	Unimplemented
W	Writable bit	**HS**	Set by Hardware	**X**	Bit is unknown at Reset
K	Write to clear	**S**	Software settable bit	—	—

Bit	7	6	5	4	3	2	1	0
						APBADIV[2:0]		
Access						R/W	R/W	R/W
Reset						0	0	0

Bits 2:0 – APBADIV[2:0] APBA Prescaler Selection
These bits define the division ratio of the APBA clock prescaler (2^n).

APBADIV[2:0]	Name	Description
0x0	DIV1	Divide by 1
0x1	DIV2	Divide by 2
0x2	DIV4	Divide by 4
0x3	DIV8	Divide by 8
0x4	DIV16	Divide by 16
0x5	DIV32	Divide by 32
0x6	DIV64	Divide by 64
0x7	DIV128	Divide by 128

© 2025 Microchip Technology Inc. and its subsidiaries

13.6.5. APBB Clock Select

Name: APBBSEL
Offset: 0x0A
Reset: 0x00
Property: Write-Protected

Table 13-10. Register Bit Attribute Legend

Symbol	Description	Symbol	Description	Symbol	Description
R	Readable bit	**HC**	Cleared by Hardware	(Grey cell)	Unimplemented
W	Writable bit	**HS**	Set by Hardware	**X**	Bit is unknown at Reset
K	Write to clear	**S**	Software settable bit	—	—

Bit	7	6	5	4	3	2	1	0
						APBBDIV[2:0]		
Access						R/W	R/W	R/W
Reset						0	0	0

Bits 2:0 – APBBDIV[2:0] APBB Prescaler Selection
These bits define the division ratio of the APBB clock prescaler (2^n).

APBBDIV[2:0]	Name	Description
0x0	DIV1	Divide by 1
0x1	DIV2	Divide by 2
0x2	DIV4	Divide by 4
0x3	DIV8	Divide by 8
0x4	DIV16	Divide by 16
0x5	DIV32	Divide by 32
0x6	DIV64	Divide by 64
0x7	DIV128	Divide by 128

© 2025 Microchip Technology Inc. and its subsidiaries

13.6.6. APBC Clock Select

Name: APBCSEL
Offset: 0x0B
Reset: 0x00
Property: Write-Protected

Table 13-11. Register Bit Attribute Legend

Symbol	Description	Symbol	Description	Symbol	Description
R	Readable bit	**HC**	Cleared by Hardware	(Grey cell)	Unimplemented
W	Writable bit	**HS**	Set by Hardware	**X**	Bit is unknown at Reset
K	Write to clear	**S**	Software settable bit	—	—

Bit	7	6	5	4	3	2	1	0
						APBCDIV[2:0]		
Access						R/W	R/W	R/W
Reset						0	0	0

Bits 2:0 – APBCDIV[2:0] APBC Prescaler Selection
These bits define the division ratio of the APBC clock prescaler (2^n).

APBCDIV[2:0]	Name	Description
0x0	DIV1	Divide by 1
0x1	DIV2	Divide by 2
0x2	DIV4	Divide by 4
0x3	DIV8	Divide by 8
0x4	DIV16	Divide by 16
0x5	DIV32	Divide by 32
0x6	DIV64	Divide by 64
0x7	DIV128	Divide by 128

© 2025 Microchip Technology Inc. and its subsidiaries

13.6.7. AHB Mask

Name: AHBMASK
Offset: 0x14
Reset: 0x0000007F
Property: Write-Protected

Table 13-12. Register Bit Attribute Legend

Symbol	Description	Symbol	Description	Symbol	Description
R	Readable bit	**HC**	Cleared by Hardware	(Grey cell)	Unimplemented
W	Writable bit	**HS**	Set by Hardware	**X**	Bit is unknown at Reset
K	Write to clear	**S**	Software settable bit	—	—

Bit	31	30	29	28	27	26	25	24
Access								
Reset								

Bit	23	22	21	20	19	18	17	16
Access								
Reset								

Bit	15	14	13	12	11	10	9	8
Access								
Reset								

Bit	7	6	5	4	3	2	1	0
				NVMCTRL	DSU	HPB2	HPB1	HPB0
Access				R/W	R/W	R/W	R/W	R/W
Reset				1	1	1	1	1

Bit 4 – NVMCTRL NVMCTRL AHB Clock Mask

Value	Description
0	The AHB clock for the NVMCTRL is stopped.
1	The AHB clock for the NVMCTRL is enabled.

Bit 3 – DSU DSU AHB Clock Mask

Value	Description
0	The AHB clock for the DSU is stopped.
1	The AHB clock for the DSU is enabled.

Bit 2 – HPB2 HPB2 AHB Clock Mask

Value	Description
0	The AHB clock for the HPB2 is stopped.
1	The AHB clock for the HPB2 is enabled.

Bit 1 – HPB1 HPB1 AHB Clock Mask

Value	Description
0	The AHB clock for the HPB1 is stopped.

© 2025 Microchip Technology Inc. and its subsidiaries

Value	Description
1	The AHB clock for the HPB1 is enabled.

Bit 0 – HPB0 HPB0 AHB Clock Mask

Value	Description
0	The AHB clock for the HPB0 is stopped.
1	The AHB clock for the HPB0 is enabled.

© 2025 Microchip Technology Inc. and its subsidiaries

13.6.8. APBA Mask

Name: APBAMASK
Offset: 0x18
Reset: 0x0000007F
Property: Write-Protected

Table 13-13. Register Bit Attribute Legend

Symbol	Description	Symbol	Description	Symbol	Description
R	Readable bit	**HC**	Cleared by Hardware	(Grey cell)	Unimplemented
W	Writable bit	**HS**	Set by Hardware	**X**	Bit is unknown at Reset
K	Write to clear	**S**	Software settable bit	—	—

Bit	31	30	29	28	27	26	25	24
Access								
Reset								

Bit	23	22	21	20	19	18	17	16
Access								
Reset								

Bit	15	14	13	12	11	10	9	8
Access								
Reset								

Bit	7	6	5	4	3	2	1	0
		EIC	RTC	WDT	GCLK	SYSCTRL	PM	PAC0
Access		R/W	R/W	R/W	R/W	R/W	R/W	R/W
Reset		1	1	1	1	1	1	1

Bit 6 – EIC EIC APB Clock Enable

Value	Description
0	The APBA clock for the EIC is stopped
1	The APBA clock for the EIC is enabled

Bit 5 – RTC RTC APB Clock Enable

Value	Description
0	The APBA clock for the RTC is stopped
1	The APBA clock for the RTC is enabled

Bit 4 – WDT WDT APB Clock Enable

Value	Description
0	The APBA clock for the WDT is stopped
1	The APBA clock for the WDT is enabled

Bit 3 – GCLK GCLK APB Clock Enable

Value	Description
0	The APBA clock for the GCLK is stopped

© 2025 Microchip Technology Inc. and its subsidiaries

Value	Description
1	The APBA clock for the GCLK is enabled

Bit 2 – SYSCTRL SYSCTRL APB Clock Enable

Value	Description
0	The APBA clock for the SYSCTRL is stopped
1	The APBA clock for the SYSCTRL is enabled

Bit 1 – PM PM APB Clock Enable

Value	Description
0	The APBA clock for the PM is stopped
1	The APBA clock for the PM is enabled

Bit 0 – PAC0 PAC0 APB Clock Enable

Value	Description
0	The APBA clock for the PAC0 is stopped
1	The APBA clock for the PAC0 is enabled

© 2025 Microchip Technology Inc. and its subsidiaries

13.6.9. APBB Mask

Name: APBBMASK
Offset: 0x1C
Reset: 0x0000007F
Property: Write-Protected

Table 13-14. Register Bit Attribute Legend

Symbol	Description	Symbol	Description	Symbol	Description
R	Readable bit	**HC**	Cleared by Hardware	(Grey cell)	Unimplemented
W	Writable bit	**HS**	Set by Hardware	**X**	Bit is unknown at Reset
K	Write to clear	**S**	Software settable bit	—	—

Bit	31	30	29	28	27	26	25	24
Access								
Reset								

Bit	23	22	21	20	19	18	17	16
Access								
Reset								

Bit	15	14	13	12	11	10	9	8
Access								
Reset								

Bit	7	6	5	4	3	2	1	0
					PORT	NVMCTRL	DSU	PAC1
Access					R/W	R/W	R/W	R/W
Reset					1	1	1	1

Bit 3 – PORT PORT APB Clock Enable

Value	Description
0	The APBB clock for the PORT is stopped.
1	The APBB clock for the PORT is enabled.

Bit 2 – NVMCTRL NVMCTRL APB Clock Enable

Value	Description
0	The APBB clock for the NVMCTRL is stopped.
1	The APBB clock for the NVMCTRL is enabled.

Bit 1 – DSU DSU APB Clock Enable

Value	Description
0	The APBB clock for the DSU is stopped.
1	The APBB clock for the DSU is enabled.

Bit 0 – PAC1 PAC1 APB Clock Enable

Value	Description
0	The APBB clock for the PAC1 is stopped.

© 2025 Microchip Technology Inc. and its subsidiaries

Value	Description
1	The APBB clock for the PAC1 is enabled.

© 2025 Microchip Technology Inc. and its subsidiaries

13.6.10. APBC Mask

Name: APBCMASK
Offset: 0x20
Reset: 0x00010000
Property: Write-Protected

Table 13-15. Register Bit Attribute Legend

Symbol	Description	Symbol	Description	Symbol	Description
R	Readable bit	**HC**	Cleared by Hardware	(Grey cell)	Unimplemented
W	Writable bit	**HS**	Set by Hardware	**X**	Bit is unknown at Reset
K	Write to clear	**S**	Software settable bit	—	—

Bit	31	30	29	28	27	26	25	24
Access								
Reset								

Bit	23	22	21	20	19	18	17	16
					PTC	DAC	AC	ADC
Access					R/W	R/W	R/W	R/W
Reset					0	0	0	1

Bit	15	14	13	12	11	10	9	8
	TC7	TC6	TC5	TC4	TC3	TC2	TC1	TC0
Access	R/W	R/W	R/W	R/W	R/W	R/W	R/W	R/W
Reset	0	0	0	0	0	0	0	0

Bit	7	6	5	4	3	2	1	0
	SERCOM5	SERCOM4	SERCOM3	SERCOM2	SERCOM1	SERCOM0	EVSYS	PAC2
Access	R/W	R/W	R/W	R/W	R/W	R/W	R/W	R/W
Reset	0	0	0	0	0	0	0	0

Bit 19 – PTC PTC APB Clock Enable

Value	Description
0	The APBC clock for the PTC is stopped.
1	The APBC clock for the PTC is enabled.

Bit 18 – DAC DAC APB Clock Enable

Value	Description
0	The APBC clock for the DAC is stopped.
1	The APBC clock for the DAC is enabled.

Bit 17 – AC AC APB Clock Enable

Value	Description
0	The APBC clock for the AC is stopped.
1	The APBC clock for the AC is enabled.

Bit 16 – ADC ADC APB Clock Enable

Value	Description
0	The APBC clock for the ADC is stopped.

© 2025 Microchip Technology Inc. and its subsidiaries

Value	Description
1	The APBC clock for the ADC is enabled.

Bit 15 – TC7 TC7 APB Clock Enable

Value	Description
0	The APBC clock for the TC7 is stopped.
1	The APBC clock for the TC7 is enabled.

Bit 14 – TC6 TC6 APB Clock Enable

Value	Description
0	The APBC clock for the TC6 is stopped.
1	The APBC clock for the TC6 is enabled.

Bit 13 – TC5 TC5 APB Clock Enable

Value	Description
0	The APBC clock for the TC5 is stopped.
1	The APBC clock for the TC5 is enabled.

Bit 12 – TC4 TC4 APB Clock Enable

Value	Description
0	The APBC clock for the TC4 is stopped.
1	The APBC clock for the TC4 is enabled.

Bit 11 – TC3 TC3 APB Clock Enable

Value	Description
0	The APBC clock for the TC3 is stopped.
1	The APBC clock for the TC3 is enabled.

Bit 10 – TC2 TC2 APB Clock Enable

Value	Description
0	The APBC clock for the TC2 is stopped.
1	The APBC clock for the TC2 is enabled.

Bit 9 – TC1 TC1 APB Clock Enable

Value	Description
0	The APBC clock for the TC1 is stopped.
1	The APBC clock for the TC1 is enabled.

Bit 8 – TC0 TC0 APB Clock Enable

Value	Description
0	The APBC clock for the TC0 is stopped.
1	The APBC clock for the TC0 is enabled.

Bit 7 – SERCOM5 SERCOM5 APB Clock Enable

Value	Description
0	The APBC clock for the SERCOM5 is stopped.
1	The APBC clock for the SERCOM5 is enabled.

Bit 6 – SERCOM4 SERCOM4 APB Clock Enable

© 2025 Microchip Technology Inc. and its subsidiaries

Value	Description
0	The APBC clock for the SERCOM4 is stopped.
1	The APBC clock for the SERCOM4 is enabled.

Bit 5 – SERCOM3 SERCOM2 APB Clock Enable

Value	Description
0	The APBC clock for the SERCOM3 is stopped.
1	The APBC clock for the SERCOM3 is enabled.

Bit 4 – SERCOM2 SERCOM2 APB Clock Enable

Value	Description
0	The APBC clock for the SERCOM2 is stopped.
1	The APBC clock for the SERCOM2 is enabled.

Bit 3 – SERCOM1 SERCOM1 APB Clock Enable

Value	Description
0	The APBC clock for the SERCOM1 is stopped.
1	The APBC clock for the SERCOM1 is enabled.

Bit 2 – SERCOM0 SERCOM0 APB Clock Enable

Value	Description
0	The APBC clock for the SERCOM0 is stopped.
1	The APBC clock for the SERCOM0 is enabled.

Bit 1 – EVSYS EVSYS APB Clock Enable

Value	Description
0	The APBC clock for the EVSYS is stopped.
1	The APBC clock for the EVSYS is enabled.

Bit 0 – PAC2 PAC2 APB Clock Enable

Value	Description
0	The APBC clock for the PAC2 is stopped.
1	The APBC clock for the PAC2 is enabled.

© 2025 Microchip Technology Inc. and its subsidiaries

13.6.11. Interrupt Enable Clear

Name: INTENCLR
Offset: 0x34
Reset: 0x00
Property: Write-Protected

Table 13-16. Register Bit Attribute Legend

Symbol	Description	Symbol	Description	Symbol	Description
R	Readable bit	**HC**	Cleared by Hardware	(Grey cell)	Unimplemented
W	Writable bit	**HS**	Set by Hardware	**X**	Bit is unknown at Reset
K	Write to clear	**S**	Software settable bit	—	—

Bit	7	6	5	4	3	2	1	0
								CKRDY
Access								R/W
Reset								0

Bit 0 – CKRDY Clock Ready Interrupt Enable
Writing a zero to this bit has no effect.
Writing a one to this bit will clear the Clock Ready Interrupt Enable bit and the corresponding interrupt request.

Value	Description
0	The Clock Ready interrupt is disabled.
1	The Clock Ready interrupt is enabled and will generate an interrupt request when the Clock Ready Interrupt flag is set.

© 2025 Microchip Technology Inc. and its subsidiaries

13.6.12. Interrupt Enable Set

Name: INTENSET
Offset: 0x35
Reset: 0x00
Property: Write-Protected

Table 13-17. Register Bit Attribute Legend

Symbol	Description	Symbol	Description	Symbol	Description
R	Readable bit	**HC**	Cleared by Hardware	(Grey cell)	Unimplemented
W	Writable bit	**HS**	Set by Hardware	**X**	Bit is unknown at Reset
K	Write to clear	**S**	Software settable bit	—	—

Bit	7	6	5	4	3	2	1	0
								CKRDY
Access								R/W
Reset								0

Bit 0 – CKRDY Clock Ready Interrupt Enable
Writing a zero to this bit has no effect.
Writing a one to this bit will set the Clock Ready Interrupt Enable bit and enable the Clock Ready interrupt.

Value	Description
0	The Clock Ready interrupt is disabled.
1	The Clock Ready interrupt is enabled.

© 2025 Microchip Technology Inc. and its subsidiaries

13.6.13. Interrupt Flag Status and Clear

Name: INTFLAG
Offset: 0x36
Reset: 0x00
Property: -

Table 13-18. Register Bit Attribute Legend

Symbol	Description	Symbol	Description	Symbol	Description
R	Readable bit	**HC**	Cleared by Hardware	(Grey cell)	Unimplemented
W	Writable bit	**HS**	Set by Hardware	**X**	Bit is unknown at Reset
K	Write to clear	**S**	Software settable bit	—	—

Bit	7	6	5	4	3	2	1	0
								CKRDY
Access								R/W
Reset								0

Bit 0 – CKRDY Clock Ready
This flag is cleared by writing a one to the flag.
This flag is set when the synchronous CPU and APBx clocks have frequencies as indicated in the CPUSEL and APBxSEL registers, and will generate an interrupt if INTENCLR/SET.CKRDY is one.
Writing a zero to this bit has no effect.
Writing a one to this bit clears the Clock Ready Interrupt flag.

© 2025 Microchip Technology Inc. and its subsidiaries

13.6.14. Reset Cause

Name: RCAUSE
Offset: 0x38
Reset: 0x01
Property: -

Table 13-19. Register Bit Attribute Legend

Symbol	Description	Symbol	Description	Symbol	Description
R	Readable bit	**HC**	Cleared by Hardware	(Grey cell)	Unimplemented
W	Writable bit	**HS**	Set by Hardware	**X**	Bit is unknown at Reset
K	Write to clear	**S**	Software settable bit	—	—

Bit	7	6	5	4	3	2	1	0
		SYST	WDT	EXT		BOD33	BOD12	POR
Access		R	R	R		R	R	R
Reset		0	0	0		0	0	1

Bit 6 – SYST System Reset Request
This bit is set if a system Reset request has been performed. Refer to the Cortex processor documentation for more details.

Bit 5 – WDT Watchdog Reset
This flag is set if a Watchdog Timer Reset occurs.

Bit 4 – EXT External Reset
This flag is set if an external Reset occurs.

Bit 2 – BOD33 Brown-Out 33 Detector Reset
This flag is set if a BOD33 Reset occurs.

Bit 1 – BOD12 Brown-Out 12 Detector Reset
This flag is set if a BOD12 Reset occurs.

Bit 0 – POR Power-On Reset
This flag is set if a POR occurs.

© 2025 Microchip Technology Inc. and its subsidiaries

14. SYSCTRL – System Controller

14.1. Overview

The System Controller (SYSCTRL) provides a user interface to the clock sources, Brown-out Detectors, on-chip voltage regulator and voltage reference of the device.

Through the Interface registers, it is possible to enable, disable, calibrate and monitor the SYSCTRL sub-peripherals.

All sub-peripheral statuses are collected in the Power and Clocks Status register (PCLKSR). They can additionally trigger interrupts upon status changes through the INTENSET (INTENSET), INTENCLR (INTENCLR) and INTFLAG (INTFLAG) registers.

Additionally, BOD33 interrupts can be used to wake-up the device from Standby mode upon a programmed Brown-out Detection.

14.2. Features

The following are key features of the SYSCTRL module:

- 0.4-32 MHz Crystal Oscillator (XOSC)
  - Tunable gain control
  - Programmable start-up time
  - Crystal or external input clock on XIN I/O
- 32.768 kHz Crystal Oscillator (XOSC32K)
  - Automatic or manual gain control
  - Programmable start-up time
  - Crystal or external input clock on XIN32 I/O
- 32.768 kHz High Accuracy Internal Oscillator (OSC32K)
  - Frequency fine tuning
  - Programmable start-up time
- 32.768 kHz Ultra-Low Power Internal Oscillator (OSCULP32K)
  - Ultra-low power, always-on oscillator
  - Frequency fine tuning
  - Calibration value loaded from Flash Factory Calibration at Reset
- 8 MHz Internal Oscillator (OSC8M)
  - Fast start-up
  - Output frequency fine tuning
  - 4/2/1 MHz divided output frequencies available
  - Calibration value loaded from Flash Factory Calibration at Reset
- Digital Frequency Locked Loop (DFLL48M)
  - Internal oscillator with no external components
  - 48 MHz output frequency
  - Operates standalone as a high-frequency programmable oscillator in Open-Loop mode
  - Operates as an accurate frequency multiplier against a known frequency in Closed-Loop mode
- 3.3V Brown-Out Detector (BOD33)
  - Programmable threshold

© 2025 Microchip Technology Inc. and its subsidiaries

  - Low-power sampling mode of operation
  - Threshold value loaded from Flash User Calibration at start-up
  - Triggers Resets or interrupts
  - Hysteresis
- Internal Voltage Regulator system (VREG)
  - Operating modes:
    - Normal mode
    - Low-Power mode
  - With an internal non-configurable Brown-out Detector (BOD12)
- Voltage Reference System (VREF)
  - Bandgap voltage generator with programmable calibration value
  - Temperature sensor
  - Bandgap calibration value loaded from Flash Factory Calibration at start-up

14.3. Block Diagram

Figure 14-1. SYSCTRL Block Diagram

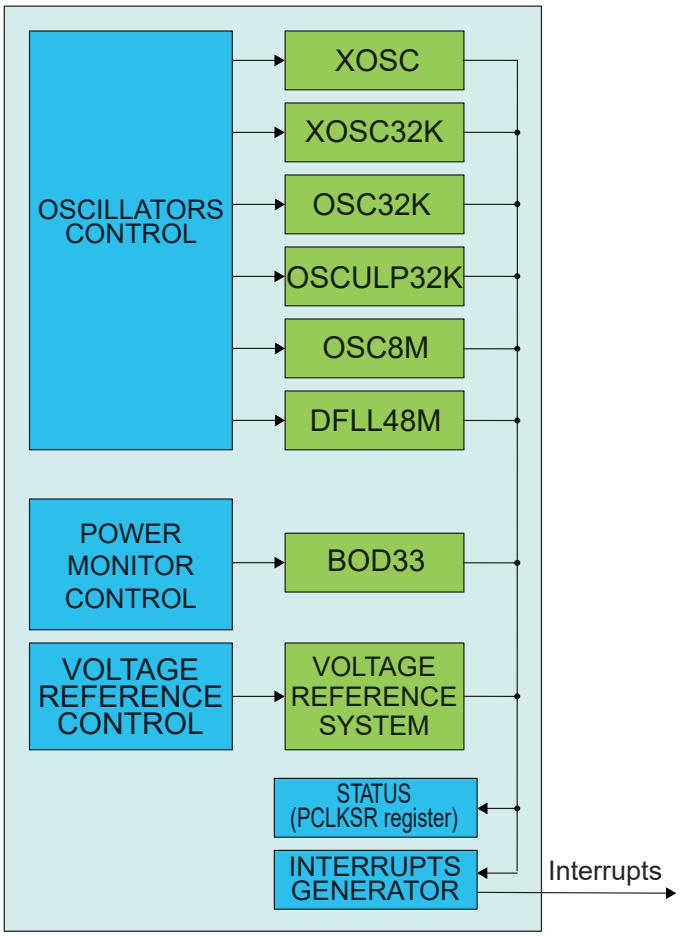

© 2025 Microchip Technology Inc. and its subsidiaries

14.4. Signal Description

Signal Name	Types	Description
XIN	Analog Input	Multi-purpose Crystal Oscillator or external clock generator input
XOUT	Analog Output	External Multi-purpose Crystal Oscillator output
XIN32	Analog Input	32 kHz Crystal Oscillator or external clock generator input
XOUT32	Analog Output	32 kHz Crystal Oscillator output

The I/O lines are automatically selected when XOSC or XOSC32K are is enabled. Refer to the *Oscillator Pinout*.

14.5. Peripheral Dependencies

Table 14-1. Peripherals Configuration Summary

Peripheral Name	Base Address	IRQ Line	AHB Clock		APB Clock		Generic Clock	PAC		Events		
			Index	Enabled at Reset	Index	Enabled at Reset	Index	Index	Prot at Reset	User	Generator	SleepWalking
SYSCTRL	0x40000800	1			2	Y	0: DFLL48M reference	2	N			Y

14.5.1. I/O Lines

I/O lines are configured by SYSCTRL when either XOSC or XOSC32K are enabled, and need no user configuration.

14.5.2. Power Management

The BOD33 and BOD12 can trigger Resets when the I/O supply or core supply voltages drop below the programmed threshold value. BOD33 and BOD12 can additionally wake-up the system from Standby mode when I/O or core supply failure is detected. However, BOD33 and BOD12 cannot be used in Continuous mode when the system is in Standby mode, and will, therefore, be automatically disabled until the system is woken up. Only Sampled mode operation is allowed when the system is in Standby mode.

All oscillators except XOSC32K, OSC32K, and OSCULP32K are turned off in some sleep modes and turned automatically on when the chip wakes up.

The SYSCTRL can continue to operate in any sleep mode where the selected source clock is running. The SYSCTRL interrupts can be used to wake-up the device from sleep modes. The events can trigger other operations in the system without exiting sleep modes. Refer to the *PM – Power Manager* on the different sleep modes.

14.5.3. Clocks

The SYSCTRL gathers controls for all device oscillators and provides clock sources to the Generic Clock Controller (GCLK). The available clock sources are: XOSC, XOSC32K, OSC32K, OSCULP32K, OSC8M, DFLL48M, and FDPLL96M.

The SYSCTRL bus clock (CLK_SYSCTRL_APB) can be enabled and disabled in the Power Manager (PM), and the default state of CLK_SYSCTRL_APB can be found in the *Peripheral Clock Masking* section in the *PM – Power Manager*.

The clock used by BOD33 in sampled mode is asynchronous to the user interface clock (CLK_SYSCTRL_APB). Likewise, the DFLL48M control logic uses the DFLL oscillator output, which is also asynchronous to the user interface clock (CLK_SYSCTRL_APB). Due to this asynchronicity, writes to certain registers will require synchronization between the clock domains. Refer to the Synchronization for further details.

© 2025 Microchip Technology Inc. and its subsidiaries

14.5.4. Interrupts

The interrupt request line is connected to the Interrupt Controller. Using the SYSCTRL interrupts requires the Interrupt Controller to be configured first. Refer to *Nested Vector Interrupt Controller* for details.

14.5.5. Debug Operation

When the CPU is halted in Debug mode, the SYSCTRL continues normal operation. If the SYSCTRL is configured in a way that requires it to be periodically serviced by the CPU through interrupts or similar, improper operation or data loss may result during debugging.

If debugger cold-plugging is detected by the system, BOD33 Reset will be masked. The BOD Resets keep running under hot-plugging. This allows to correct a BOD33 user level too high for the available supply.

14.5.6. Register Access Protection

Registers with write access can be optionally write-protected by the Peripheral Access Controller (PAC), except for the following:

- Interrupt Flag Status and Clear register (INTFLAG)

Note: Optional write protection is indicated by the "PAC Write Protection" property in the register description.

Write protection does not apply for accesses through an external debugger.

14.5.7. Analog Connections

When used, the 32.768 kHz crystal must be connected between the XIN32 and XOUT32 pins, and the 0.4-32 MHz crystal must be connected between the XIN and XOUT pins, along with any required load capacitors. For details on recommended oscillator characteristics and capacitor load, refer to the *Electrical Characteristics* for details.

14.6. Functional Description

14.6.1. Principle of Operation

The XOSC, XOSC32K, OSC32K, OSCULP32K, OSC8M, DFLL48M, FDPLL96M, BOD33,VREG sub-peripherals are enabled, disabled, or have their calibration values updated.

The Power and Clocks Status register gathers different status signals coming from the sub-peripherals controlled by the SYSCTRL. The status signals can be used to generate system interrupts, and in some cases wake up the system from Standby mode, provided the corresponding interrupt is enabled.

The oscillator must be enabled to run. The oscillator is enabled by writing a one to the ENABLE bit in the respective Oscillator Control register, and disabled by writing a zero to the Oscillator Control register. In Idle mode, the default operation of the oscillator is to run only when requested by a peripheral. In Standby mode, the default operation of the oscillator is to stop. This behavior can be changed by the user, see below for details.

The behavior of the oscillators in the different sleep modes is shown in the table below.

Table 14-2. Behavior of the Oscillators

Oscillator	Idle 0, 1, 2	Standby
XOSC	Run on request	Stop
XOSC32K	Run on request	Stop
OSC32K	Run on request	Stop
OSCULP32K	Run	Run

© 2025 Microchip Technology Inc. and its subsidiaries

Table 14-2. Behavior of the Oscillators (continued)

Oscillator	Idle 0, 1, 2	Standby
OSC8M	Run on request	Stop
DFLL48M	Run on request	Stop
FDPLL96M	Run on request	Stop

To force an oscillator to always run in Idle mode, and not only when requested by a peripheral, the oscillator ONDEMAND bit must be written to zero. The default value of this bit is one, and thus the default operation in Idle mode is to run only when requested by a peripheral.

To force the oscillator to run in Standby mode, the RUNSTDBY bit must be written to one. The oscillator will then run in Standby mode when requested by a peripheral (ONDEMAND is one). To force an oscillator to always run in Standby mode, and not only when requested by a peripheral, the ONDEMAND bit must be written to zero and RUNSTDBY must be written to one.

The next table shows the behavior in the different sleep modes, depending on the settings of ONDEMAND and RUNSTDBY.

Table 14-3. Behavior in the different Sleep modes

Sleep mode	ONDEMAND	RUNSTDBY	Behavior
Idle 0, 1, 2	0	X	Run
Idle 0, 1, 2	1	X	Run when requested by a peripheral
Standby	0	0	Stop
Standby	0	1	Run
Standby	1	0	Stop
Standby	1	1	Run when requested by a peripheral

Note: This does not apply to the OSCULP32K oscillator, which is always running and cannot be disabled.

14.6.2. External Multipurpose Crystal Oscillator (XOSC) Operation

The XOSC can operate in two different modes:

- External clock, with an external clock signal connected to the XIN pin
- Crystal oscillator, with an external 0.4-32MHz crystal

The XOSC can be used as a clock source for generic clock generators, as described in the *GCLK – Generic Clock Controller*.

At Reset, the XOSC is disabled, and the XIN/XOUT pins can be used as General Purpose I/O (GPIO) pins or by other peripherals in the system. When XOSC is enabled, the Operating mode determines the GPIO usage. When in Crystal Oscillator mode, the XIN and XOUT pins are controlled by the SYSCTRL, and GPIO functions are overridden on both pins. When in External Clock mode, only the XIN pin will be overridden and controlled by the SYSCTRL, while the XOUT pin can still be used as a GPIO pin.

The XOSC is enabled by writing a one to the Enable bit in the External Multipurpose Crystal Oscillator Control register (XOSC.ENABLE). To enable the XOSC as a crystal oscillator, a one must be written to the XTAL Enable bit (XOSC.XTALEN). If XOSC.XTALEN is zero, external clock input will be enabled.

When in Crystal Oscillator mode (XOSC.XTALEN is one), the External Multipurpose Crystal Oscillator Gain (XOSC.GAIN) must be set to match the external crystal oscillator frequency.

The XOSC will behave differently in different Sleep modes based on the settings of XOSC.RUNSTDBY, XOSC.ONDEMAND and XOSC.ENABLE:

© 2025 Microchip Technology Inc. and its subsidiaries

XOSC.RUNSTDBY	XOSC.ONDEMAND	XOSC.ENABLE	Sleep Behavior
-	-	0	Disabled
0	0	1	Always run in IDLE Sleep modes. Disabled in STANDBY Sleep mode.
0	1	1	Only run in IDLE Sleep modes if requested by a peripheral. Disabled in STANDBY Sleep mode.
1	0	1	Always run in IDLE and STANDBY Sleep modes.
1	1	1	Only run in IDLE or STANDBY Sleep modes if requested by a peripheral.

After a hard Reset, or when waking up from a Sleep mode where the XOSC was disabled, the XOSC will need a certain amount of time to stabilize on the correct frequency. This start-up time can be configured by changing the Oscillator Start-Up Time bit group (XOSC.STARTUP) in the External Multipurpose Crystal Oscillator Control register. During the start-up time, the oscillator output is masked to ensure that no unstable clock propagates to the digital logic. The External Multipurpose Crystal Oscillator Ready bit in the Power and Clock Status register (PCLKSR.XOSCRDY) is set when the user-selected start-up time is over. An interrupt is generated on a zero-to-one transition on PCLKSR.XOSCRDY if the External Multipurpose Crystal Oscillator Ready bit in the Interrupt Enable Set register (INTENSET.XOSCRDY) is set.

Note: The external OSC clock failure detection is not available in standby mode.

Note: Do not enter Standby mode when an oscillator is in start-up:
Wait for the OSCxRDY bit in SYSCTRL.PCLKSR register to be set before going into Standby mode.

14.6.3. 32 kHz External Crystal Oscillator (XOSC32K) Operation

The XOSC32K can operate in two different modes:

- External clock, with an external clock signal connected to XIN32
- Crystal oscillator, with an external 32.768 kHz crystal connected between XIN32 and XOUT32

The XOSC32K can be used as a source for generic clock generators, as described in the *GCLK – Generic Clock Controller*.

At Power-on Reset (POR) the XOSC32K is disabled, and the XIN32/XOUT32 pins can be used as General Purpose I/O (GPIO) pins or by other peripherals in the system. When XOSC32K is enabled, the operating mode determines the GPIO usage. When in Crystal Oscillator mode, XIN32 and XOUT32 are controlled by the SYSCTRL, and GPIO functions are overridden on both pins. When in External Clock mode, only the XIN32 pin will be overridden and controlled by the SYSCTRL, while the XOUT32 pin can still be used as a GPIO pin.

The external clock or crystal oscillator is enabled by writing a one to the Enable bit (XOSC32K.ENABLE) in the 32 kHz External Crystal Oscillator Control register. To enable the XOSC32K as a crystal oscillator, a one must be written to the XTAL Enable bit (XOSC32K.XTALEN). If XOSC32K.XTALEN is zero, external clock input will be enabled.

The oscillator is disabled by writing a zero to the Enable bit (XOSC32K.ENABLE) in the 32 kHz External Crystal Oscillator Control register while keeping the other bits unchanged. Writing to the XOSC32K.ENABLE bit while writing to other bits may result in unpredictable behavior. The oscillator remains enabled in all Sleep modes if it has been enabled beforehand. The start-up time of the 32 kHz External Crystal Oscillator is selected by writing to the Oscillator Start-Up Time bit group (XOSC32K.STARTUP) in the in the 32 kHz External Crystal Oscillator Control register. The SYSCTRL masks the oscillator output during the start-up time to ensure that no unstable clock propagates to the digital logic. The 32 kHz External Crystal Oscillator Ready bit (PCLKSR.XOSC32KRDY) in the Power and Clock Status register is set when the user-selected start-up time is over. An interrupt is generated on a zero-to-one transition of PCLKSR.XOSC32KRDY if the 32 kHz External Crystal Oscillator Ready bit (INTENSET.XOSC32KRDY) in the Interrupt Enable Set Register is set.

© 2025 Microchip Technology Inc. and its subsidiaries

As a crystal oscillator usually requires a very long start-up time (up to one second), the 32 kHz External Crystal Oscillator will keep running across Resets, except for Power-on Reset (POR).

XOSC32K can provide two clock outputs when connected to a crystal. The XOSC32K has a 32.768 kHz output enabled by writing a one to the 32 kHz External Crystal Oscillator 32 kHz Output Enable bit (XOSC32K.EN32K) in the 32 kHz External Crystal Oscillator Control register.XOSC32K.EN32K is only usable when XIN32 is connected to a crystal, and not when an external digital clock is applied on XIN32.

Note: In the event of external XOSC32K failure, a power cycle is required to reset the GCLK generators.

Note: Do not enter Standby mode when an oscillator is in start-up:
Wait for the OSCxRDY bit in SYSCTRL.PCLKSR register to be set before going into Standby mode.

14.6.4. 32 kHz Internal Oscillator (OSC32K) Operation

The OSC32K provides a tunable, low-speed and low-power clock source.

The OSC32K can be used as a source for the generic clock generators, as described in the *GCLK – Generic Clock Controller*.

The OSC32K is disabled by default. The OSC32K is enabled by writing a one to the 32 kHz Internal Oscillator Enable bit (OSC32K.ENABLE) in the 32 kHz Internal Oscillator Control register. It is disabled by writing a zero to OSC32K.ENABLE. The OSC32K has a 32.768 kHz output enabled by writing a one to the 32 kHz Internal Oscillator 32 kHz Output Enable bit (OSC32K.EN32K). Both of the OSC32K.ENABLE and OSC32K.EN32K bits must be set for the clock to start. When the clock is stable, the PCLKSR.OSC32KRDY bit will go high and the clock will propagate in the design.

The frequency of the OSC32K oscillator is controlled by the value in the 32 kHz Internal Oscillator Calibration bits (OSC32K.CALIB) in the 32 kHz Internal Oscillator Control register. The OSC32K.CALIB value must be written by the user. Flash Factory Calibration values are stored in the NVM Software Calibration Area (refer to *NVM Software Calibration Area Mapping*). When writing to the Calibration bits, the user must wait for the PCLKSR.OSC32KRDY bit to go high before the value is committed to the oscillator.

14.6.5. 32 kHz Ultra Low-Power Internal Oscillator (OSCULP32K) Operation

The OSCULP32K provides a tunable, low-speed and ultra low-power clock source. The OSCULP32K is factory-calibrated under typical voltage and temperature conditions. The OSCULP32K should be preferred to the OSC32K whenever the power requirements are prevalent over frequency stability and accuracy.

The OSCULP32K can be used as a source for the generic clock generators, as described in the *GCLK – Generic Clock Controller*.

The OSCULP32K is enabled by default after a Power-on Reset (POR) and will always run except during POR. The OSCULP32K has a 32.768 kHz output and a 1.024 kHz output that are always running.

The frequency of the OSCULP32K oscillator is controlled by the value in the 32 kHz Ultra Low-Power Internal Oscillator Calibration bits (OSCULP32K.CALIB) in the 32 kHz Ultra Low-Power Internal Oscillator Control register. OSCULP32K.CALIB is automatically loaded from Flash Factory Calibration during start-up, and is used to compensate for process variation, as described in the *Electrical Characteristics*. The calibration value can be overridden by the user by writing to OSCULP32K.CALIB.

14.6.6. 8 MHz Internal Oscillator (OSC8M) Operation

OSC8M is an internal oscillator operating in Open-Loop mode and generating an 8 MHz frequency. The OSC8M is factory-calibrated under typical voltage and temperature conditions.

OSC8M is the default clock source that is used after a Power-on Reset (POR). The OSC8M can be used as a source for the generic clock generators, as described in the *GCLK – Generic Clock Controller*.

© 2025 Microchip Technology Inc. and its subsidiaries

In order to enable OSC8M, the Oscillator Enable bit in the OSC8M Control register (OSC8M.ENABLE) must be written to one. OSC8M will not be enabled until OSC8M.ENABLE is set. In order to disable OSC8M, OSC8M.ENABLE must be written to zero. OSC8M will not be disabled until OSC8M is cleared.

The frequency of the OSC8M oscillator is controlled by the value in the calibration bits (OSC8M.CALIB) in the OSC8M Control register. CALIB is automatically loaded from Flash Factory Calibration during start-up, and is used to compensate for process variation, as described in the *Electrical Characteristics*.

The user can control the oscillation frequency by writing to the Frequency Range (FRANGE) and Calibration (CALIB) bit groups in the 8 MHz RC Oscillator Control register (OSC8M). It is not recommended to update the FRANGE and CALIB bits when the OSC8M is enabled. As this is in Open-Loop mode, the frequency will be voltage, temperature and process dependent. Refer to the *Electrical Characteristics* for details.

OSC8M is automatically switched off in certain Sleep modes to reduce power consumption, as described in the *PM – Power Manager*.

14.6.7. Digital Frequency Locked Loop (DFLL48M) Operation

The DFLL48M can operate in both Open-Loop mode and Closed-Loop mode. In Closed-Loop mode, a low-frequency clock with high accuracy can be used as the reference clock to get high accuracy on the output clock (CLK_DFLL48M).

The DFLL48M can be used as a source for the generic clock generators, as described in the *GCLK – Generic Clock Controller*.
Note: DFLL ONDEMAND bit in DFLLCTRL register must be set to zero before configuring the DFLL module.

14.6.7.1. Basic Operation

14.6.7.1.1. Open-Loop Operation

After any Reset, the Open-Loop mode is selected. When operating in Open-Loop mode, the output frequency of the DFLL48M will be determined by the values written to the DFLL Coarse Value bit group and the DFLL Fine Value bit group (DFLLVAL.COARSE and DFLLVAL.FINE) in the DFLL Value register. Using "DFLL48M COARSE CAL" value from *NVM Software Calibration Area Mapping* in DFLL.COARSE helps to output a frequency close to 48 MHz.

It is possible to change the values of DFLLVAL.COARSE and DFLLVAL.FINE and thereby the output frequency of the DFLL48M output clock, CLK_DFLL48M, while the DFLL48M is enabled and in use. CLK_DFLL48M is ready to be used when PCLKSR.DFLLRDY is set after enabling the DFLL48M.

14.6.7.1.2. Closed-Loop Operation

In closed-loop operation, the output frequency is continuously regulated against a reference clock. Once the multiplication factor is set, the oscillator fine tuning is automatically adjusted. The DFLL48M must be correctly configured before closed-loop operation can be enabled. After enabling the DFLL48M, it must be configured in the following way:

1. Enable and select a reference clock (CLK_DFLL48M_REF). CLK_DFLL48M_REF is Generic Clock Channel 0 (GCLK_DFLL48M_REF). Refer to *GCLK – Generic Clock Controller* for details.
2. Select the maximum step size allowed in finding the Coarse and Fine values by writing the appropriate values to the DFLL Coarse Maximum Step and DFLL Fine Maximum Step bit groups (DFLLMUL.CSTEP and DFLLMUL.FSTEP) in the DFLL Multiplier register. A small step size will ensure low overshoot on the output frequency, but will typically result in longer lock times. A high value might give a large overshoot, but will typically provide faster locking. DFLLMUL.CSTEP and DFLLMUL.FSTEP should not be higher than 50% of the maximum value of DFLLVAL.COARSE and DFLLVAL.FINE, respectively.
3. Select the multiplication factor in the DFLL Multiply Factor bit group (DFLLMUL.MUL) in the DFLL Multiplier register. Care must be taken when choosing DFLLMUL.MUL so that the output

© 2025 Microchip Technology Inc. and its subsidiaries

frequency does not exceed the maximum frequency of the DFLL. If the target frequency is below the minimum frequency of the DFLL48M, the output frequency will be equal to the DFLL minimum frequency.

4. Start the closed loop mode by writing a one to the DFLL Mode Selection bit (DFLLCTRL.MODE) in the DFLL Control register.

The frequency of CLK_DFLL48M ($F_{clkdfll48m}$) is given by:

$$F_{\text{clkdfll48}m} = \text{DFLLMUL} \cdot \text{MUL} \times F_{\text{clkdfll48mref}}$$

where $F_{clkdfll48mref}$ is the frequency of the reference clock (CLK_DFLL48M_REF). DFLLVAL.COARSE and DFLLVAL.FINE are read-only in closed-loop mode, and are controlled by the frequency tuner to meet user specified frequency. In closed-loop mode, the value in DFLLVAL.COARSE is used by the frequency tuner as a starting point for Coarse. Writing DFLLVAL.COARSE to a value close to the final value before entering closed-loop mode will reduce the time needed to get a lock on Coarse.

Using "DFLL48M COARSE CAL" from *NVM Software Calibration Area Mapping* for DFLL.COARSE will start DFLL with a frequency close to 48 MHz.

Following Software sequence should be followed while using the same.

1. load "DFLL48M COARSE CAL" from *NVM User Row Mapping* in DFLL.COARSE register
2. Set DFLLCTRL.BPLCKC bit
3. Start DFLL close loop

This procedure will reduce DFLL Lock time to DFLL Fine lock time.

14.6.7.1.3. Frequency Locking

The locking of the frequency in Closed-Loop mode is divided into two stages. In the first, Coarse stage, the control logic quickly finds the correct value for DFLLVAL.COARSE and sets the output frequency to a value close to the correct frequency. On coarse lock, the DFLL Locked on Coarse Value bit (PCLKSR.DFLLLOCKC) in the Power and Clocks Status register will be set.

In the second, Fine stage, the control logic tunes the value in DFLLVAL.FINE so that the output frequency is very close to the desired frequency. On fine lock, the DFLL Locked on Fine Value bit (PCLKSR.DFLLLOCKF) in the Power and Clocks Status register will be set.

Interrupts are generated by both PCLKSR.DFLLLOCKC and PCLKSR.DFLLLOCKF if INTENSET.DFLLOCKC or INTENSET.DFLLOCKF are written to one.

CLK_DFLL48M is ready to be used when the DFLL Ready bit (PCLKSR.DFLLRDY) in the Power and Clocks Status register is set, but the accuracy of the output frequency depends on which locks are set. For lock times, refer to the *Electrical Characteristics*.

14.6.7.1.4. Frequency Error Measurement

The ratio between CLK_DFLL48M_REF and CLK48M_DFLL is measured automatically when the DFLL48M is in Closed-Loop mode. The difference between this ratio and the value in DFLLMUL.MUL is stored in the DFLL Multiplication Ratio Difference bit group (DFLLVAL.DIFF) in the DFLL Value register. The relative error on CLK_DFLL48M compared to the target frequency is calculated as follows:

$$\text{ERROR} = \frac{\text{DIFF}}{\text{MUL}}$$

14.6.7.1.5. Drift Compensation

If the Stable DFLL Frequency bit (DFLLCTRL.STABLE) in the DFLL Control register is zero, the frequency tuner will automatically compensate for drift in the CLK_DFLL48M without losing either of the locks. This means that DFLLVAL.FINE can change after every measurement of CLK_DFLL48M.

© 2025 Microchip Technology Inc. and its subsidiaries

The DFLLVAL.FINE value overflows or underflows can occur in Close-Loop mode when the clock source reference drifts or is unstable. This will set the DFLL Out Of Bounds bit (PCLKSR.DFLLOOB) in the Power and Clocks Status register.

To avoid this error, the reference clock in Close-Loop mode must be stable, an external oscillator is recommended and internal oscillator forbidden. The better choice is to use an XOSC32K.

14.6.7.1.6. Reference Clock Stop Detection

If CLK_DFLL48M_REF stops or is running at a very low frequency (slower than CLK_DFLL48M/(2 * MUL_{MAX})), the DFLL Reference Clock Stopped bit (PCLKSR.DFLLRCS) in the Power and Clocks Status register will be set. Detecting a stopped reference clock can take a long time, on the order of 217 CLK_DFLL48M cycles. When the reference clock is stopped, the DFLL48M will operate as if in Open-Loop mode. Closed-Loop mode operation will automatically resume if the CLK_DFLL48M_REF is restarted. An interrupt is generated on a zero-to-one transition on PCLKSR.DFLLRCS if the DFLL Reference Clock Stopped bit (INTENSET.DFLLRCS) in the Interrupt Enable Set register is set.

14.6.7.2. Additional Features

14.6.7.2.1. Dealing with Delay in the DFLL in Closed-Loop Mode

The time from selecting a new CLK_DFLL48M frequency until this frequency is output by the DFLL48M can be up to several microseconds. If the value in DFLLMUL.MUL is small, this can lead to instability in the DFLL48M locking mechanism, which can prevent the DFLL48M from achieving locks. To avoid this, a chill cycle, during which the CLK_DFLL48M frequency is not measured, can be enabled. The chill cycle is enabled by default, but can be disabled by writing a one to the DFLL Chill Cycle Disable bit (DFLLCTRL.CCDIS) in the DFLL Control register. Enabling chill cycles might double the lock time.

Another solution to this problem consists of using less strict lock requirements. This is called Quick Lock (QL), which is also enabled by default, but it can be disabled by writing a one to the Quick Lock Disable bit (DFLLCTRL.QLDIS) in the DFLL Control register. The Quick Lock might lead to a larger spread in the output frequency than chill cycles, but the average output frequency is the same.

14.6.7.2.2. Wake from Sleep Modes

DFLL48M can optionally reset its lock bits when it is disabled. This is configured by the Lose Lock After Wake bit (DFLLCTRL.LLAW) in the DFLL Control register. If DFLLCTRL.LLAW is zero, the DFLL48M will be re-enabled and start running with the same configuration as before being disabled, even if the reference clock is not available. The locks will not be lost. When the reference clock has restarted, the Fine tracking will quickly compensate for any frequency drift during sleep if DFLLCTRL.STABLE is zero. If DFLLCTRL.LLAW is one when the DFLL is turned off, the DFLL48M will lose all its locks, and needs to regain these through the full lock sequence.

14.6.7.2.3. Accuracy

There are three main factors that determine the accuracy of $F_{clkdfll48m}$. These can be tuned to obtain maximum accuracy when fine lock is achieved.

- Fine resolution: The frequency step between two Fine values. This is relatively smaller for high output frequencies.
- Resolution of the measurement: If the resolution of the measured $F_{clkdfll48m}$ is low (i.e., the ratio between the CLK_DFLL48M frequency and the CLK_DFLL48M_REF frequency is small), then the DFLL48M might lock at a frequency that is lower than the targeted frequency. It is recommended to use a reference clock frequency of 32 kHz or lower to avoid this issue for low target frequencies.
- The accuracy of the reference clock.

14.6.8. 3.3V Brown-Out Detector Operation

The 3.3V BOD monitors the 3.3V AVDD supply (BOD33). It supports continuous or sampling modes.

© 2025 Microchip Technology Inc. and its subsidiaries

The threshold value action (reset the device or generate an interrupt), the Hysteresis configuration, as well as the enable/disable settings are loaded from Flash User Calibration at start-up, and can be overridden by writing to the corresponding BOD33 register bit groups.

14.6.8.1. 3.3V Brown-Out Detector (BOD33)

The 3.3V Brown-out Detector (BOD33) monitors the AVDD supply and compares the voltage with the brown-out threshold level set in the BOD33 Level bit group (BOD33.LEVEL) in the BOD33 register. The BOD33 can generate either an interrupt or a Reset when AVDD crosses below the brown-out threshold level. The BOD33 detection status can be read from the BOD33 Detection bit (PCLKSR.BOD33DET) in the Power and Clocks Status register.

At start-up or at Power-on Reset (POR), the BOD33 register values are loaded from the Flash User Row. Refer to *NVM User Row Mapping* for more details.

14.6.8.2. Continuous Mode

When the BOD33 Mode bit (BOD33.MODE) in the BOD33 register is written to zero and the BOD33 is enabled, the BOD33 operates in Continuous mode. In this mode, the BOD33 is continuously monitoring the AVDD supply voltage.

Continuous mode is the default mode for BOD33.

14.6.8.3. Sampling Mode

The Sampling mode is a low-power mode where the BOD33 is being repeatedly enabled on a sampling clock's ticks. The BOD33 will monitor the supply voltage for a short period of time and then go to a low-power disabled state until the next sampling clock tick.

When the BOD is in sampling mode, it requests its reference only when needed. This reference will be ready when the supply voltage has reached at least 95% of its target voltage. This can lead to a shift of the BOD threshold level of up to 5% if the bandgap is not requested by anything else during standby (i.e., internal regulator is not on the LDO (VREG.RUNSTDBY=0); the bandgap is not used by the ADC, AC, or DAC; and the voltage doubler of the AC is disabled).

Sampling mode is enabled by writing one to BOD33.MODE. The frequency of the clock ticks ($F_{clksampling}$) is controlled by the BOD33 Prescaler Select bit group (BOD33.PSEL) in the BOD33 register.

$$F_{\text{clksampling}} = \frac{F_{\text{clkprescaler}}}{2^{(\text{PSEL}+1)}}$$

The prescaler signal ($F_{clkprescaler}$) is a 1 kHz clock, output from the32 kHz Ultra Low-Power Oscillator, OSCULP32K.

As the Sampling mode clock is different from the APB clock domain, synchronization among the clocks is necessary. The next figure shows a block diagram of the Sampling mode. The BOD33Synchronization Ready bit (PCLKSR.B33SRDY) in the Power and Clocks Status register show the synchronization ready status of the synchronizer. Writing attempts to the BOD33 register are ignored while PCLKSR.B33SRDY is zero.

© 2025 Microchip Technology Inc. and its subsidiaries

Figure 14-2. Sampling Mode Block Diagram

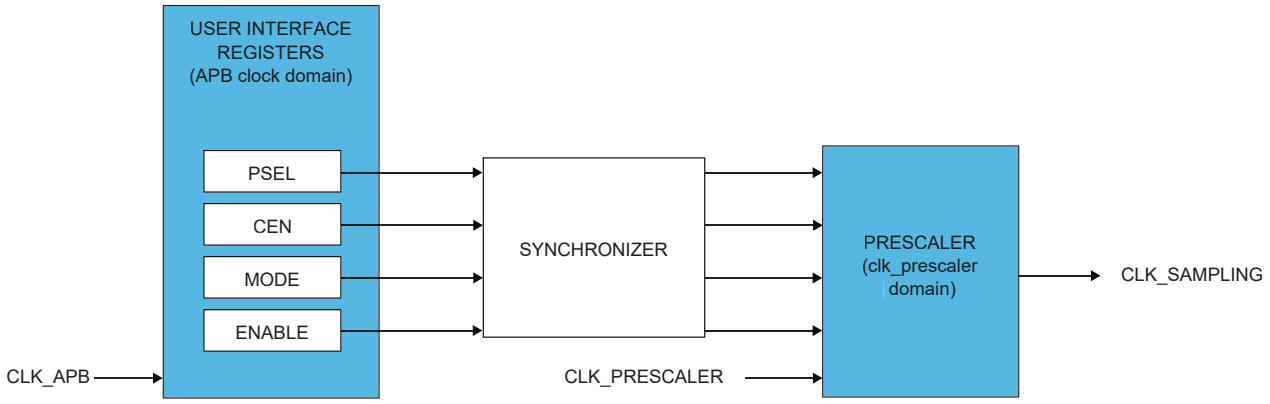

The BOD33 Clock Enable bit (BOD33.CEN) in the BOD33 register should always be disabled before changing the prescaler value. To change the prescaler value for the BOD33 during Sampling mode, the following steps need to be taken:

1. Wait until the PCLKSR.B33SRDY bit is set.
2. Write the selected value to the BOD33.PSEL bit group.

14.6.8.4. Hysteresis

The hysteresis functionality can be used in both Continuous and Sampling mode. Writing a one to the BOD33 Hysteresis bit (BOD33.HYST) in the BOD33 register will add hysteresis to the BOD33 threshold level.

14.6.9. Voltage Reference System Operation

The Voltage Reference System (VREF) consists of a Bandgap Reference Voltage Generator and a temperature sensor.

The Bandgap Reference Voltage Generator is factory-calibrated under typical voltage and temperature conditions.

At Reset, the VREF.CAL register value is loaded from Flash Factory Calibration.

14.6.9.1. User Control of the Voltage Reference System

To enable the temperature sensor, write a one to the Temperature Sensor Enable bit (VREF.TSEN) in the VREF register. The temperature sensor is not available on the DA1 devices.

The temperature sensor can be redirected to the ADC for conversion.

The Bandgap Reference Voltage Generator output can also be routed to the ADC if the Bandgap Output Enable bit (VREF.BGOUTEN) in the VREF register is set.

The Bandgap Reference Voltage Generator output level is determined by the CALIB bit group (VREF.CALIB) value in the VREF register. The default calibration value can be overridden by writing to the CALIB bit group.

14.6.10. Voltage Regulator System Operation

The embedded Voltage Regulator (VREG) is an internal voltage regulator that provides the core logic supply (VDDCORE).

14.6.11. Interrupts

The SYSCTRL has the following interrupt sources:

- XOSCRDY - Multipurpose Crystal Oscillator Ready: A “0-to-1” transition on the PCLKSR.XOSCRDY bit is detected

© 2025 Microchip Technology Inc. and its subsidiaries

- XOSC32KRDY - 32 kHz Crystal Oscillator Ready: A “0-to-1” transition on the PCLKSR.XOSC32KRDY bit is detected
- OSC32KRDY - 32 kHz Internal Oscillator Ready: A “0-to-1” transition on the PCLKSR.OSC32KRDY bit is detected
- OSC8MRDY - 8 MHz Internal Oscillator Ready: A “0-to-1” transition on the PCLKSR.OSC8MRDY bit is detected
- DFLLRDY - DFLL48M Ready: A “0-to-1” transition on the PCLKSR.DFLLRDY bit is detected
- DFLLOOB - DFLL48M Out Of Boundaries: A “0-to-1” transition on the PCLKSR.DFLLOOB bit is detected
  Note: To prevent false interrupts on the DFLLOOB interrupt, ensure that the lockbits, DFLLLCKC and DFLLLCKF, in the SYSCTRL Interrupt Flag Status and Clear register (INTFLAG) are set before enabling the DFLLOOB interrupt.
- DFLLLOCKF - DFLL48M Fine Lock: A “0-to-1” transition on the PCLKSR.DFLLLOCKF bit is detected
- DFLLLOCKC - DFLL48M Coarse Lock: A “0-to-1” transition on the PCLKSR.DFLLLOCKC bit is detected
- DFLLRCS - DFLL48M Reference Clock has Stopped: A “0-to-1” transition on the PCLKSR.DFLLRCS bit is detected
- BOD33RDY - BOD33 Ready: A “0-to-1” transition on the PCLKSR.BOD33RDY bit is detected
- BOD33DET - BOD33 Detection: A “0-to-1” transition on the PCLKSR.BOD33DET bit is detected. This is an asynchronous interrupt and can be used to wake-up the device from any Sleep mode.
- B33SRDY - BOD33 Synchronization Ready: A “0-to-1” transition on the PCLKSR.B33SRDY bit is detected

Each interrupt source has an Interrupt flag associated with it. The Interrupt flag in the Interrupt Flag Status and Clear (INTFLAG) register is set when the Interrupt condition occurs. Each interrupt can be individually enabled by writing a one to the corresponding bit in the Interrupt Enable Set (INTENSET) register, and disabled by writing a one to the corresponding bit in the Interrupt Enable Clear (INTENCLR) register. An interrupt request is generated when the interrupt flag is set and the corresponding interrupt is enabled. The interrupt request remains active until the Interrupt flag is cleared, the interrupt is disabled, or the SYSCTRL is reset. See Interrupt Flag Status and Clear (INTFLAG) register for details on how to clear Interrupt flags.

All interrupt requests from the peripheral are ORed together on system level to generate one combined interrupt request to the NVIC. Refer to *Nested Vector Interrupt Controller* for details. The user must read the INTFLAG register to determine which Interrupt condition is present.

Note: Interrupts must be globally enabled for interrupt requests to be generated. Refer to *Nested Vector Interrupt Controller* for details.

14.6.12. Synchronization

Due to the multiple clock domains, values in the DFLL48M Control registers need to be synchronized to other clock domains. The status of this synchronization can be read from the Power and Clocks Status register (PCLKSR). Before writing to any of the DFLL48M Control registers, the user must check that the DFLL Ready bit (PCLKSR.DFLLRDY) in PCLKSR is set to one. When this bit is set, the DFLL48M can be configured and CLK_DFLL48M is ready to be used. Any write to any of the DFLL48M Control registers while DFLLRDY is zero will be ignored. An interrupt is generated on a zero-to-one transition of DFLLRDY if the DFLLRDY bit (INTENSET.DFLLDY) in the Interrupt Enable Set register is set.

In order to read from any of the DFLL48M Configuration registers, the user must request a read synchronization by writing a one to DFLLSYNC.READREQ. The registers can be read only when PCLKSR.DFLLRDY is set. If DFLLSYNC.READREQ is not written before a read, a synchronization will

© 2025 Microchip Technology Inc. and its subsidiaries

be started, and the bus will be halted until the synchronization is complete. Reading the DFLL48M registers when the DFLL48M is disabled will not halt the bus.

The prescaler counter used to trigger one-shot brown-out detections also operates asynchronously from the peripheral bus. As a consequence, the Prescaler registers require synchronization when written or read. The synchronization results in a delay from when the initialization of the write or read operation begins until the operation is complete.

The write synchronization is triggered by a write to the BOD33 Control register. The Synchronization Ready bit (PCLKSR.B33SRDY) in the PCLKSR register will be cleared when the write synchronization starts and set when the write synchronization is complete. When the write synchronization is ongoing (PCLKSR.B33SRDYis zero), an attempt to do any of the following will cause the peripheral bus to stall until the synchronization is complete:

- Writing to the BOD33Control register
- Reading the BOD33 Control register that was written

The user can poll PCLKSR.B33SRDY or use the INTENSET.B33SRDY interrupt to check when the synchronization is complete. It is also possible to perform the next read/write operation and wait, as this next operation will be completed after the ongoing read/write operation is synchronized.

© 2025 Microchip Technology Inc. and its subsidiaries

14.7. Register Summary

Offset	Name	Bit Pos.	7	6	5	4	3	2	1	0
0x00	INTENCLR	7:0	DFLLLCKC	DFLLLCKF	DFLLOOB	DFLLRDY	OSC8MRDY	OSC32KRDY	XOSC32KRDY	XOSCRDY
		15:8					B33SRDY	BOD33DET	BOD33RDY	DFLLRCS
		23:16								
		31:24								
0x04	INTENSET	7:0	DFLLLCKC	DFLLLCKF	DFLLOOB	DFLLRDY	OSC8MRDY	OSC32KRDY	XOSC32KRDY	XOSCRDY
		15:8					B33SRDY	BOD33DET	BOD33RDY	DFLLRCS
		23:16								
		31:24								
0x08	INTFLAG	7:0	DFLLLCKC	DFLLLCKF	DFLLOOB	DFLLRDY	OSC8MRDY	OSC32KRDY	XOSC32KRDY	XOSCRDY
		15:8	[3:0]				B33SRDY	BOD33DET	BOD33RDY	DFLLRCS
		23:16	[11:4]							
		31:24	[19:12]							
0x0C	PCLKSR	7:0	DFLLLCKC	DFLLLCKF	DFLLOOB	DFLLRDY	OSC8MRDY	OSC32KRDY	XOSC32KRDY	XOSCRDY
		15:8					B33SRDY	BOD33DET	BOD33RDY	DFLLRCS
		23:16								
		31:24								
0x10	XOSC	7:0	ONDEMAND	RUNSTDBY				XTALEN	ENABLE	
		15:8	STARTUP[3:0]					GAIN[2:0]		
0x12 ... 0x13	Reserved									
0x14	XOSC32K	7:0	ONDEMAND	RUNSTDBY			EN32K	XTALEN	ENABLE	
		15:8				WRTLOCK		STARTUP[2:0]		
0x16 ... 0x17	Reserved									
0x18	OSC32K	7:0	ONDEMAND	RUNSTDBY				EN32K	ENABLE	
		15:8				WRTLOCK		STARTUP[2:0]		
		23:16		CALIB[6:0]						
		31:24								
0x1C	OSCULP32K	7:0	WRTLOCK			CALIB[4:0]				
0x1D ... 0x1F	Reserved									
0x20	OSC8M	7:0	ONDEMAND	RUNSTDBY					ENABLE	
		15:8							PRESC[1:0]	
		23:16	CALIB[7:0]							
		31:24	FRANGE[1:0]				CALIB[11:8]			
0x24	DFLLCTRL	7:0	ONDEMAND			LLAW	STABLE	MODE	ENABLE	
		15:8							QLDIS	CCDIS
0x26 ... 0x27	Reserved									
0x28	DFLLVAL	7:0	FINE[7:0]							
		15:8	COARSE[5:0]						FINE[9:8]	
		23:16	DIFF[7:0]							
		31:24	DIFF[15:8]							
0x2C	DFLLMUL	7:0	MUL[7:0]							
		15:8	MUL[15:8]							
		23:16	FSTEP[7:0]							
		31:24	CSTEP[5:0]						FSTEP[9:8]	
0x30	DFLLSYNC	7:0	READREQ							
0x31 ... 0x33	Reserved									
0x34	BOD33	7:0		RUNSTDBY		ACTION[1:0]		HYST	ENABLE	
		15:8	PSEL[3:0]						CEN	MODE
		23:16			LEVEL[5:0]					
		31:24								

© 2025 Microchip Technology Inc. and its subsidiaries

Register Summary (continued)

Offset	Name	Bit Pos.	7	6	5	4	3	2	1	0
0x38 ... 0x3B	Reserved									
0x3C	VREG	7:0		RUNSTDBY					ENABLE	
		15:8			FORCELDO					
0x3E ... 0x3F	Reserved									
0x40	VREF	7:0						BGOUTEN	TSEN	
		15:8								
		23:16	CALIB[7:0]							
		31:24						CALIB[10:8]		

© 2025 Microchip Technology Inc. and its subsidiaries

14.7.1. Interrupt Enable Clear

Name: INTENCLR
Offset: 0x00
Reset: 0x00000000
Property: Write-Protected

Table 14-4. Register Bit Attribute Legend

Symbol	Description	Symbol	Description	Symbol	Description
R	Readable bit	**HC**	Cleared by Hardware	(Grey cell)	Unimplemented
W	Writable bit	**HS**	Set by Hardware	**X**	Bit is unknown at Reset
K	Write to clear	**S**	Software settable bit	—	—

Bit	31	30	29	28	27	26	25	24
Access								
Reset								

Bit	23	22	21	20	19	18	17	16
Access								
Reset								

Bit	15	14	13	12	11	10	9	8
					B33SRDY	BOD33DET	BOD33RDY	DFLLRCS
Access					R/W	R/W	R/W	R/W
Reset					0	0	0	0

Bit	7	6	5	4	3	2	1	0
	DFLLLCKC	DFLLLCKF	DFLLOOB	DFLLRDY	OSC8MRDY	OSC32KRDY	XOSC32KRDY	XOSCRDY
Access	R/W	R/W	R/W	R/W	R/W	R/W	R/W	R/W
Reset	0	0	0	0	0	0	0	0

Bit 11 – B33SRDY BOD33 Synchronization Ready Interrupt Enable
Writing a zero to this bit has no effect.
Writing a one to this bit will clear the BOD33 Synchronization Ready Interrupt Enable bit, which disables the BOD33 Synchronization Ready interrupt.

Value	Description
0	The BOD33 Synchronization Ready interrupt is disabled.
1	The BOD33 Synchronization Ready interrupt is enabled, and an interrupt request will be generated when the BOD33 Synchronization Ready Interrupt flag is set.

Bit 10 – BOD33DET BOD33 Detection Interrupt Enable
Writing a zero to this bit has no effect.
Writing a one to this bit will clear the BOD33 Detection Interrupt Enable bit, which disables the BOD33 Detection interrupt.

Value	Description
0	The BOD33 Detection interrupt is disabled.
1	The BOD33 Detection interrupt is enabled, and an interrupt request will be generated when the BOD33 Detection Interrupt flag is set.

Bit 9 – BOD33RDY BOD33 Ready Interrupt Enable
Writing a zero to this bit has no effect.

© 2025 Microchip Technology Inc. and its subsidiaries

Writing a one to this bit will clear the BOD33 Ready Interrupt Enable bit, which disables the BOD33 Ready interrupt.

Value	Description
0	The BOD33 Ready interrupt is disabled.
1	The BOD33 Ready interrupt is enabled, and an interrupt request will be generated when the BOD33 Ready Interrupt flag is set.

Bit 8 – DFLLRCS DFLL Reference Clock Stopped Interrupt Enable

Writing a zero to this bit has no effect.
Writing a one to this bit will clear the DFLL Reference Clock Stopped Interrupt Enable bit, which disables the DFLL Reference Clock Stopped interrupt.

Value	Description
0	The DFLL Reference Clock Stopped interrupt is disabled.
1	The DFLL Reference Clock Stopped interrupt is enabled, and an interrupt request will be generated when the DFLL Reference Clock Stopped Interrupt flag is set.

Bit 7 – DFLLLCKC DFLL Lock Coarse Interrupt Enable

Writing a zero to this bit has no effect.
Writing a one to this bit will clear the DFLL Lock Coarse Interrupt Enable bit, which disables the DFLL Lock Coarse interrupt.

Value	Description
0	The DFLL Lock Coarse interrupt is disabled.
1	The DFLL Lock Coarse interrupt is enabled, and an interrupt request will be generated when the DFLL Lock Coarse Interrupt flag is set.

Bit 6 – DFLLLCKF DFLL Lock Fine Interrupt Enable

Writing a zero to this bit has no effect.
Writing a one to this bit will clear the DFLL Lock Fine Interrupt Enable bit, which disables the DFLL Lock Fine interrupt.

Value	Description
0	The DFLL Lock Fine interrupt is disabled.
1	The DFLL Lock Fine interrupt is enabled, and an interrupt request will be generated when the DFLL Lock Fine Interrupt flag is set.

Bit 5 – DFLLOOB DFLL Out Of Bounds Interrupt Enable

Writing a zero to this bit has no effect.
Writing a one to this bit will clear the DFLL Out Of Bounds Interrupt Enable bit, which disables the DFLL Out Of Bounds interrupt.
To prevent false interrupts on the DFLLOOB interrupt, ensure that the lockbits, DFLLLCKC and DFLLLCKF, in the SYSCTRL Interrupt Flag Status and Clear register (INTFLAG) are set before enabling the DFLLOOB interrupt.

Value	Description
0	The DFLL Out Of Bounds interrupt is disabled.
1	The DFLL Out Of Bounds interrupt is enabled, and an interrupt request will be generated when the DFLL Out Of Bounds Interrupt flag is set.

Bit 4 – DFLLRDY DFLL Ready Interrupt Enable

Writing a zero to this bit has no effect.
Writing a one to this bit will clear the DFLL Ready Interrupt Enable bit, which disables the DFLL Ready interrupt.

Value	Description
0	The DFLL Ready interrupt is disabled.

© 2025 Microchip Technology Inc. and its subsidiaries

Value	Description
1	The DFLL Ready interrupt is enabled, and an interrupt request will be generated when the DFLL Ready Interrupt flag is set.

Bit 3 – OSC8MRDY OSC8M Ready Interrupt Enable

Writing a zero to this bit has no effect.
Writing a one to this bit will clear the OSC8M Ready Interrupt Enable bit, which disables the OSC8M Ready interrupt.

Value	Description
0	The OSC8M Ready interrupt is disabled.
1	The OSC8M Ready interrupt is enabled, and an interrupt request will be generated when the OSC8M Ready Interrupt flag is set.

Bit 2 – OSC32KRDY OSC32K Ready Interrupt Enable

Writing a zero to this bit has no effect.
Writing a one to this bit will clear the OSC32K Ready Interrupt Enable bit, which disables the OSC32K Ready interrupt.

Value	Description
0	The OSC32K Ready interrupt is disabled.
1	The OSC32K Ready interrupt is enabled, and an interrupt request will be generated when the OSC32K Ready Interrupt flag is set.

Bit 1 – XOSC32KRDY XOSC32K Ready Interrupt Enable

Writing a zero to this bit has no effect.
Writing a one to this bit will set the XOSC32K Ready Interrupt Enable bit, which enables the XOSC32K Ready interrupt.

Value	Description
0	The XOSC32K Ready interrupt is disabled.
1	The XOSC32K Ready interrupt is enabled, and an interrupt request will be generated when the XOSC32K Ready Interrupt flag is set.

Bit 0 – XOSCRDY XOSC Ready Interrupt Enable

Writing a zero to this bit has no effect.
Writing a one to this bit will set the XOSC Ready Interrupt Enable bit, which enables the XOSC Ready interrupt.

Value	Description
0	The XOSC Ready interrupt is disabled.
1	The XOSC Ready interrupt is enabled, and an interrupt request will be generated when the XOSC Ready Interrupt flag is set.

© 2025 Microchip Technology Inc. and its subsidiaries

14.7.2. Interrupt Enable Set

Name: INTENSET
Offset: 0x04
Reset: 0x00000000
Property: Write-Protected

Table 14-5. Register Bit Attribute Legend

Symbol	Description	Symbol	Description	Symbol	Description
R	Readable bit	**HC**	Cleared by Hardware	(Grey cell)	Unimplemented
W	Writable bit	**HS**	Set by Hardware	**X**	Bit is unknown at Reset
K	Write to clear	**S**	Software settable bit	—	—

Bit	31	30	29	28	27	26	25	24
Access								
Reset								

Bit	23	22	21	20	19	18	17	16
Access								
Reset								

Bit	15	14	13	12	11	10	9	8
					B33SRDY	BOD33DET	BOD33RDY	DFLLRCS
Access					R/W	R/W	R/W	R/W
Reset					0	0	0	0

Bit	7	6	5	4	3	2	1	0
	DFLLLCKC	DFLLLCKF	DFLLOOB	DFLLRDY	OSC8MRDY	OSC32KRDY	XOSC32KRDY	XOSCRDY
Access	R/W	R/W	R/W	R/W	R/W	R/W	R/W	R/W
Reset	0	0	0	0	0	0	0	0

Bit 11 – B33SRDY BOD33 Synchronization Ready Interrupt Enable
Writing a zero to this bit has no effect.
Writing a one to this bit will set the BOD33 Synchronization Ready Interrupt Enable bit, which enables the BOD33 Synchronization Ready interrupt.

Value	Description
0	The BOD33 Synchronization Ready interrupt is disabled.
1	The BOD33 Synchronization Ready interrupt is enabled, and an interrupt request will be generated when the BOD33 Synchronization Ready Interrupt flag is set.

Bit 10 – BOD33DET BOD33 Detection Interrupt Enable
Writing a zero to this bit has no effect.
Writing a one to this bit will set the BOD33 Detection Interrupt Enable bit, which enables the BOD33 Detection interrupt.

Value	Description
0	The BOD33 Detection interrupt is disabled.
1	The BOD33 Detection interrupt is enabled, and an interrupt request will be generated when the BOD33 Detection Interrupt flag is set.

Bit 9 – BOD33RDY BOD33 Ready Interrupt Enable
Writing a zero to this bit has no effect.

© 2025 Microchip Technology Inc. and its subsidiaries

Writing a one to this bit will set the BOD33 Ready Interrupt Enable bit, which enables the BOD33 Ready interrupt.

Value	Description
0	The BOD33 Ready interrupt is disabled.
1	The BOD33 Ready interrupt is enabled, and an interrupt request will be generated when the BOD33 Ready Interrupt flag is set.

Bit 8 – DFLLRCS DFLL Reference Clock Stopped Interrupt Enable

Writing a zero to this bit has no effect.
Writing a one to this bit will set the DFLL Reference Clock Stopped Interrupt Enable bit, which enables the DFLL Reference Clock Stopped interrupt.

Value	Description
0	The DFLL Reference Clock Stopped interrupt is disabled.
1	The DFLL Reference Clock Stopped interrupt is enabled, and an interrupt request will be generated when the DFLL Reference Clock Stopped Interrupt flag is set.

Bit 7 – DFLLLCKC DFLL Lock Coarse Interrupt Enable

Writing a zero to this bit has no effect.
Writing a one to this bit will set the DFLL Lock Coarse Interrupt Enable bit, which enables the DFLL Lock Coarse interrupt.

Value	Description
0	The DFLL Lock Coarse interrupt is disabled.
1	The DFLL Lock Coarse interrupt is enabled, and an interrupt request will be generated when the DFLL Lock Coarse Interrupt flag is set.

Bit 6 – DFLLLCKF DFLL Lock Fine Interrupt Enable

Writing a zero to this bit has no effect.
Writing a one to this bit will set the DFLL Lock Fine Interrupt Disable/Enable bit, disable the DFLL Lock Fine interrupt and set the corresponding interrupt request.

Value	Description
0	The DFLL Lock Fine interrupt is disabled.
1	The DFLL Lock Fine interrupt is enabled, and an interrupt request will be generated when the DFLL Lock Fine Interrupt flag is set.

Bit 5 – DFLLOOB DFLL Out Of Bounds Interrupt Enable

Writing a zero to this bit has no effect.
Writing a one to this bit will set the DFLL Out Of Bounds Interrupt Enable bit, which enables the DFLL Out Of Bounds interrupt.

Value	Description
0	The DFLL Out Of Bounds interrupt is disabled.
1	The DFLL Out Of Bounds interrupt is enabled, and an interrupt request will be generated when the DFLL Out Of Bounds Interrupt flag is set.

Bit 4 – DFLLRDY DFLL Ready Interrupt Enable

Writing a zero to this bit has no effect.
Writing a one to this bit will set the DFLL Ready Interrupt Enable bit, which enables the DFLL Ready interrupt and set the corresponding interrupt request.

Value	Description
0	The DFLL Ready interrupt is disabled.
1	The DFLL Ready interrupt is enabled, and an interrupt request will be generated when the DFLL Ready Interrupt flag is set.

© 2025 Microchip Technology Inc. and its subsidiaries

Bit 3 – OSC8MRDY OSC8M Ready Interrupt Enable

Writing a zero to this bit has no effect.
Writing a one to this bit will set the OSC8M Ready Interrupt Enable bit, which enables the OSC8M Ready interrupt.

Value	Description
0	The OSC8M Ready interrupt is disabled.
1	The OSC8M Ready interrupt is enabled, and an interrupt request will be generated when the OSC8M Ready Interrupt flag is set.

Bit 2 – OSC32KRDY OSC32K Ready Interrupt Enable

Writing a zero to this bit has no effect.
Writing a one to this bit will set the OSC32K Ready Interrupt Enable bit, which enables the OSC32K Ready interrupt.

Value	Description
0	The OSC32K Ready interrupt is disabled.
1	The OSC32K Ready interrupt is enabled, and an interrupt request will be generated when the OSC32K Ready Interrupt flag is set.

Bit 1 – XOSC32KRDY XOSC32K Ready Interrupt Enable

Writing a zero to this bit has no effect.
Writing a one to this bit will set the XOSC32K Ready Interrupt Enable bit, which enables the XOSC32K Ready interrupt.

Value	Description
0	The XOSC32K Ready interrupt is disabled.
1	The XOSC32K Ready interrupt is enabled, and an interrupt request will be generated when the XOSC32K Ready Interrupt flag is set.

Bit 0 – XOSCRDY XOSC Ready Interrupt Enable

Writing a zero to this bit has no effect.
Writing a one to this bit will set the XOSC Ready Interrupt Enable bit, which enables the XOSC Ready interrupt.

Value	Description
0	The XOSC Ready interrupt is disabled.
1	The XOSC Ready interrupt is enabled, and an interrupt request will be generated when the XOSC Ready Interrupt flag is set.

© 2025 Microchip Technology Inc. and its subsidiaries

14.7.3. Interrupt Flag Status and Clear

Name: INTFLAG
Offset: 0x08
Reset: 0x00000000
Property: -

Table 14-6. Register Bit Attribute Legend

Symbol	Description	Symbol	Description	Symbol	Description
R	Readable bit	**HC**	Cleared by Hardware	(Grey cell)	Unimplemented
W	Writable bit	**HS**	Set by Hardware	**X**	Bit is unknown at Reset
K	Write to clear	**S**	Software settable bit	—	—

Bit	31	30	29	28	27	26	25	24
	[19:12]							
Access	R	R	R	R	R	R	R	R
Reset	0	0	0	0	0	0	0	0

Bit	23	22	21	20	19	18	17	16
	[11:4]							
Access	R	R	R	R	R	R	R	R
Reset	0	0	0	0	0	0	0	0

Bit	15	14	13	12	11	10	9	8
	[3:0]				B33SRDY	BOD33DET	BOD33RDY	DFLLRCS
Access	R	R	R	R	R/W	R/W	R/W	R/W
Reset	0	0	0	0	0	0	0	0

Bit	7	6	5	4	3	2	1	0
	DFLLLCKC	DFLLLCKF	DFLLOOB	DFLLRDY	OSC8MRDY	OSC32KRDY	XOSC32KRDY	XOSCRDY
Access	R/W	R/W	R/W	R/W	R/W	R/W	R/W	R/W
Reset	0	0	0	0	0	0	0	0

Bits 31:12 – [19:0] Reserved
These bits are unused and reserved for future use. For compatibility with future devices, always write these bits to zero when this register is written. These bits will always return zero when read.

Bit 11 – B33SRDY BOD33 Synchronization Ready
This flag is cleared by writing a one to it.
This flag is set on a zero-to-one transition of the BOD33 Synchronization Ready bit in the Status register (PCLKSR.B33SRDY) and will generate an interrupt request if INTENSET.B33SRDY is one.
Writing a zero to this bit has no effect.
Writing a one to this bit clears the BOD33 Synchronization Ready interrupt flag

Bit 10 – BOD33DET BOD33 Detection
This flag is cleared by writing a one to it.
This flag is set on a zero-to-one transition of the BOD33 Detection bit in the Status register (PCLKSR.BOD33DET) and will generate an interrupt request if INTENSET.BOD33DET is one.
Writing a zero to this bit has no effect.
Writing a one to this bit clears the BOD33 Detection interrupt flag.

Bit 9 – BOD33RDY BOD33 Ready
This flag is cleared by writing a one to it.

© 2025 Microchip Technology Inc. and its subsidiaries

This flag is set on a zero-to-one transition of the BOD33 Ready bit in the Status register (PCLKSR.BOD33RDY) and will generate an interrupt request if INTENSET.BOD33RDY is one.
Writing a zero to this bit has no effect.
Writing a one to this bit clears the BOD33 Ready interrupt flag.

Bit 8 – DFLLRCS DFLL Reference Clock Stopped
This flag is cleared by writing a one to it.
This flag is set on a zero-to-one transition of the DFLL Reference Clock Stopped bit in the Status register (PCLKSR.DFLLRCS) and will generate an interrupt request if INTENSET.DFLLRCS is one.
Writing a zero to this bit has no effect.
Writing a one to this bit clears the DFLL Reference Clock Stopped interrupt flag.

Bit 7 – DFLLLCKC DFLL Lock Coarse
This flag is cleared by writing a one to it.
This flag is set on a zero-to-one transition of the DFLL Lock Coarse bit in the Status register (PCLKSR.DFLLLCKC) and will generate an interrupt request if INTENSET.DFLLLCKC is one.
Writing a zero to this bit has no effect.
Writing a one to this bit clears the DFLL Lock Coarse interrupt flag.

Bit 6 – DFLLLCKF DFLL Lock Fine
This flag is cleared by writing a one to it.
This flag is set on a zero-to-one transition of the DFLL Lock Fine bit in the Status register (PCLKSR.DFLLLCKF) and will generate an interrupt request if INTENSET.DFLLLCKF is one.
Writing a zero to this bit has no effect.
Writing a one to this bit clears the DFLL Lock Fine interrupt flag.

Bit 5 – DFLLOOB DFLL Out Of Bounds
This flag is cleared by writing a one to it.
This flag is set on a zero-to-one transition of the DFLL Out Of Bounds bit in the Status register (PCLKSR.DFLLOOB) and will generate an interrupt request if INTENSET.DFLLOOB is one.
Writing a zero to this bit has no effect.
Writing a one to this bit clears the DFLL Out Of Bounds interrupt flag.

Bit 4 – DFLLRDY DFLL Ready
This flag is cleared by writing a one to it.
This flag is set on a zero-to-one transition of the DFLL Ready bit in the Status register (PCLKSR.DFLLRDY) and will generate an interrupt request if INTENSET.DFLLRDY is one.
Writing a zero to this bit has no effect.
Writing a one to this bit clears the DFLL Ready interrupt flag.

Bit 3 – OSC8MRDY OSC8M Ready
This flag is cleared by writing a one to it.
This flag is set on a zero-to-one transition of the OSC8M Ready bit in the Status register (PCLKSR.OSC8MRDY) and will generate an interrupt request if INTENSET.OSC8MRDY is one.
Writing a zero to this bit has no effect.
Writing a one to this bit clears the OSC8M Ready interrupt flag.

Bit 2 – OSC32KRDY OSC32K Ready
This flag is cleared by writing a one to it.
This flag is set on a zero-to-one transition of the OSC32K Ready bit in the Status register (PCLKSR.OSC32KRDY) and will generate an interrupt request if INTENSET.OSC32KRDY is one.
Writing a zero to this bit has no effect.
Writing a one to this bit clears the OSC32K Ready interrupt flag.

© 2025 Microchip Technology Inc. and its subsidiaries

Bit 1 – XOSC32KRDY XOSC32K Ready

This flag is cleared by writing a one to it.
This flag is set on a zero-to-one transition of the XOSC32K Ready bit in the Status register (PCLKSR.XOSC32KRDY) and will generate an interrupt request if INTENSET.XOSC32KRDY is one.
Writing a zero to this bit has no effect.
Writing a one to this bit clears the XOSC32K Ready interrupt flag.

Bit 0 – XOSCRDY XOSC Ready

This flag is cleared by writing a one to it.
This flag is set on a zero-to-one transition of the XOSC Ready bit in the Status register (PCLKSR.XOSCRDY) and will generate an interrupt request if INTENSET.XOSCRDY is one.
Writing a zero to this bit has no effect.
Writing a one to this bit clears the XOSC Ready interrupt flag.

© 2025 Microchip Technology Inc. and its subsidiaries

14.7.4. Power and Clocks Status

Name: PCLKSR
Offset: 0x0C
Reset: 0x00000000
Property: -

Table 14-7. Register Bit Attribute Legend

Symbol	Description	Symbol	Description	Symbol	Description
R	Readable bit	**HC**	Cleared by Hardware	(Grey cell)	Unimplemented
W	Writable bit	**HS**	Set by Hardware	**X**	Bit is unknown at Reset
K	Write to clear	**S**	Software settable bit	—	—

Bit	31	30	29	28	27	26	25	24
Access								
Reset								

Bit	23	22	21	20	19	18	17	16
Access								
Reset								

Bit	15	14	13	12	11	10	9	8
					B33SRDY	BOD33DET	BOD33RDY	DFLLRCS
Access					R	R	R	R
Reset					0	0	0	0

Bit	7	6	5	4	3	2	1	0
	DFLLLCKC	DFLLLCKF	DFLLOOB	DFLLRDY	OSC8MRDY	OSC32KRDY	XOSC32KRDY	XOSCRDY
Access	R	R	R	R	R	R	R	R
Reset	0	0	0	0	0	0	0	0

Bit 11 – B33SRDY BOD33 Synchronization Ready

Value	Description
0	BOD33 synchronization is complete.
1	BOD33 synchronization is ongoing.

Bit 10 – BOD33DET BOD33 Detection

Value	Description
0	No BOD33 detection.
1	BOD33 has detected that the I/O power supply is going below the BOD33 reference value.

Bit 9 – BOD33RDY BOD33 Ready

Note: BOD33RDY BOD33 Ready is applicable only for continuous mode. In sampling mode, this bit is not set.

Value	Description
0	BOD33 is not ready.
1	BOD33 is ready.

Bit 8 – DFLLRCS DFLL Reference Clock Stopped

© 2025 Microchip Technology Inc. and its subsidiaries

Value	Description
0	DFLL reference clock is running.
1	DFLL reference clock has stopped.

Bit 7 – DFLLLCKC DFLL Lock Coarse

Value	Description
0	No DFLL coarse lock detected.
1	DFLL coarse lock detected.

Bit 6 – DFLLLCKF DFLL Lock Fine

Value	Description
0	No DFLL fine lock detected.
1	DFLL fine lock detected.

Bit 5 – DFLLOOB DFLL Out Of Bounds

Value	Description
0	No DFLL Out Of Bounds detected.
1	DFLL Out Of Bounds detected.

Bit 4 – DFLLRDY DFLL Ready

This bit is cleared when the synchronization of registers between clock domains is complete.
This bit is set when the synchronization of registers between clock domains is started.

Value	Description
0	The Synchronization is ongoing.
1	The Synchronization is complete.

Bit 3 – OSC8MRDY OSC8M Ready

Value	Description
0	OSC8M is not ready.
1	OSC8M is stable and ready to be used as a clock source.

Bit 2 – OSC32KRDY OSC32K Ready

Value	Description
0	OSC32K is not ready.
1	OSC32K is stable and ready to be used as a clock source.

Bit 1 – XOSC32KRDY XOSC32K Ready

Value	Description
0	XOSC32K is not ready.
1	XOSC32K is stable and ready to be used as a clock source.

Bit 0 – XOSCRDY XOSC Ready

Value	Description
0	XOSC is not ready.
1	XOSC is stable and ready to be used as a clock source.

© 2025 Microchip Technology Inc. and its subsidiaries

14.7.5. External Multipurpose Crystal Oscillator (XOSC) Control

Name: XOSC
Offset: 0x10
Reset: 0x0080
Property: Write-Protected

Table 14-8. Register Bit Attribute Legend

Symbol	Description	Symbol	Description	Symbol	Description
R	Readable bit	**HC**	Cleared by Hardware	(Grey cell)	Unimplemented
W	Writable bit	**HS**	Set by Hardware	**X**	Bit is unknown at Reset
K	Write to clear	**S**	Software settable bit	—	—

Bit	15	14	13	12	11	10	9	8
	STARTUP[3:0]					GAIN[2:0]		
Access	R/W	R/W	R/W	R/W		R/W	R/W	R/W
Reset	0	0	0	0		0	0	0

Bit	7	6	5	4	3	2	1	0
	ONDEMAND	RUNSTDBY				XTALEN	ENABLE	
Access	R/W	R/W				R/W	R/W	
Reset	1	0				0	0	

Bits 15:12 – STARTUP[3:0] Start-Up Time
These bits select start-up time for the oscillator according to the table below.
The OSCULP32K oscillator is used to clock the start-up counter.

STARTUP[3:0]	Number of OSCULP32K Clock Cycles	Number of XOSC Clock Cycles	Approximate Equivalent Time(1)(2)(3)
0x0	1	3	31 µs
0x1	2	3	61 µs
0x2	4	3	122 µs
0x3	8	3	244 µs
0x4	16	3	488 µs
0x5	32	3	977 µs
0x6	64	3	1953 µs
0x7	128	3	3906 µs
0x8	256	3	7813 µs
0x9	512	3	15625 µs
0xA	1024	3	31250 µs
0xB	2048	3	62500 µs
0xC	4096	3	125000 µs
0xD	8192	3	250000 µs
0xE	16384	3	500000 µs
0xF	32768	3	1000000 µs

Notes:

1. Number of cycles for the start-up counter
2. Number of cycles for the synchronization delay, before PCLKSR.XOSCRDY is set.
3. Actual start-up time is n OSCULP32K cycles + 3 XOSC cycles, but given the time neglects the three XOSC cycles.

© 2025 Microchip Technology Inc. and its subsidiaries

Bits 10:8 – GAIN[2:0] Oscillator Gain

These bits select the gain for the oscillator. The listed maximum frequencies are recommendations, and might vary based on capacitive load and crystal characteristics.

GAIN[2:0]	Recommended Max Frequency
0x0	2 MHz
0x1	4 MHz
0x2	8 MHz
0x3	16 MHz
0x4	30 MHz
0x5-0x7	Reserved

Bit 7 – ONDEMAND On Demand Control

The On Demand operation mode allows an oscillator to be enabled or disabled, depending on peripheral clock requests.
In On Demand operation mode (i.e., if the XOSC.ONDEMAND bit has been previously written to one), the oscillator will be running only when requested by a peripheral. If there is no peripheral requesting the oscillator s clock source, the oscillator will be in a disabled state.
If On Demand is disabled, the oscillator will always be running when enabled.
In Standby Sleep mode, the On Demand operation is still active if the XOSC.RUNSTDBY bit is one. If XOSC.RUNSTDBY is zero, the oscillator is disabled.

Value	Description
0	The oscillator is always on, if enabled
1	The oscillator is enabled when a peripheral is requesting the oscillator to be used as a clock source. The oscillator is disabled if no peripheral is requesting the clock source.

Bit 6 – RUNSTDBY Run in Standby

This bit controls how the XOSC behaves during Standby Sleep mode:

Value	Description
0	The oscillator is disabled in Standby Sleep mode.
1	The oscillator is not stopped in Standby Sleep mode. If XOSC.ONDEMAND is one, the clock source will be running when a peripheral is requesting the clock. If XOSC.ONDEMAND is zero, the clock source will always be running in Standby Sleep mode.

Bit 2 – XTALEN Crystal Oscillator Enable

This bit controls the connections between the I/O pads and the external clock or crystal oscillator:

Value	Description
0	External clock connected on XIN. XOUT can be used as general purpose I/O.
1	Crystal connected to XIN/XOUT

Bit 1 – ENABLE Oscillator Enable

Value	Description
0	The oscillator is disabled
1	The oscillator is enabled

© 2025 Microchip Technology Inc. and its subsidiaries

14.7.6. 32 kHz External Crystal Oscillator (XOSC32K) Control

Name: XOSC32K
Offset: 0x14
Reset: 0x0080
Property: Write-Protected

Table 14-9. Register Bit Attribute Legend

Symbol	Description	Symbol	Description	Symbol	Description
R	Readable bit	**HC**	Cleared by Hardware	(Grey cell)	Unimplemented
W	Writable bit	**HS**	Set by Hardware	**X**	Bit is unknown at Reset
K	Write to clear	**S**	Software settable bit	—	—

Bit	15	14	13	12	11	10	9	8
				WRTLOCK		STARTUP[2:0]		
Access				R/W		R/W	R/W	R/W
Reset				0		0	0	0

Bit	7	6	5	4	3	2	1	0
	ONDEMAND	RUNSTDBY			EN32K	XTALEN	ENABLE	
Access	R/W	R/W			R/W	R/W	R/W	
Reset	1	0			0	0	0	

Bit 12 – WRTLOCK Write Lock
This bit locks the XOSC32K register for future writes to fix the XOSC32K configuration.

Value	Description
0	The XOSC32K configuration is not locked
1	The XOSC32K configuration is locked

Bits 10:8 – STARTUP[2:0] Oscillator Start-Up Time
These bits select the start-up time for the oscillator.
The OSCULP32K oscillator is used to clock the start-up counter.

Table 14-10. Start-Up Time for 32kHz External Crystal Oscillator

STARTUP[2:0]	Number of OSCULP32K Clock Cycles	Number of XOSC32K Clock Cycles	Approximate Equivalent Time (OSCULP = 32 kHz)(1)(2)(3)
0x0	1	3	122 µs
0x1	32	3	1068 µs
0x2	2048	3	62592 µs
0x3	4096	3	125092 µs
0x4	16384	3	500092 µs
0x5	32768	3	1000092 µs
0x6	65536	3	2000092 µs
0x7	131072	3	4000092 µs

Notes: 1. Number of cycles for the start-up counter.
2. Number of cycles for the synchronization delay, before PCLKSR.XOSC32KRDY is set.
3. Start-up time is n OSCULP32K cycles + 3 XOSC32K cycles.

Bit 7 – ONDEMAND On Demand Control
The On Demand operation mode allows an oscillator to be enabled or disabled depending on peripheral clock requests.

© 2025 Microchip Technology Inc. and its subsidiaries

In On Demand operation mode (i.e., if the ONDEMAND bit has been previously written to one), the oscillator will only be running when requested by a peripheral. If there is no peripheral requesting the oscillator s clock source, the oscillator will be in a disabled state.
If On Demand is disabled the oscillator will always be running when enabled.
In Standby Sleep mode, the On Demand operation is still active if the XOSC32K.RUNSTDBY bit is one. If XOSC32K.RUNSTDBY is zero, the oscillator is disabled.

Value	Description
0	The oscillator is always on, if enabled
1	The oscillator is enabled when a peripheral is requesting the oscillator to be used as a clock source. The oscillator is disabled if no peripheral is requesting the clock source.

Bit 6 – RUNSTDBY Run in Standby
This bit controls how the XOSC32K behaves during Standby Sleep mode:

Value	Description
0	The oscillator is disabled in Standby Sleep mode
1	The oscillator is not stopped in Standby Sleep mode. If XOSC32K.ONDEMAND is one, the clock source will be running when a peripheral is requesting the clock. If XOSC32K.ONDEMAND is zero, the clock source will always be running in Standby Sleep mode.

Bit 3 – EN32K 32 kHz Output Enable
This bit controls the connections between the I/O pads and the external clock or crystal oscillator:

Value	Description
0	The 32 kHz output is disabled
1	The 32 kHz output is enabled

Bit 2 – XTALEN Crystal Oscillator Enable
This bit controls the connections between the I/O pads and the external clock or crystal oscillator:

Value	Description
0	External clock connected on XIN32. XOUT32 can be used as general purpose I/O.
1	Crystal connected to XIN32/XOUT32

Bit 1 – ENABLE Oscillator Enable

Value	Description
0	The oscillator is disabled
1	The oscillator is enabled

© 2025 Microchip Technology Inc. and its subsidiaries

14.7.7. 32 kHz Internal Oscillator (OSC32K) Control

Name: OSC32K
Offset: 0x18
Reset: 0x003F0080
Property: Write-Protected

Table 14-11. Register Bit Attribute Legend

Symbol	Description	Symbol	Description	Symbol	Description
R	Readable bit	**HC**	Cleared by Hardware	(Grey cell)	Unimplemented
W	Writable bit	**HS**	Set by Hardware	**X**	Bit is unknown at Reset
K	Write to clear	**S**	Software settable bit	—	—

Bit	31	30	29	28	27	26	25	24
Access								
Reset								

Bit	23	22	21	20	19	18	17	16
		CALIB[6:0]						
Access		R/W	R/W	R/W	R/W	R/W	R/W	R/W
Reset		0	1	1	1	1	1	1

Bit	15	14	13	12	11	10	9	8
				WRTLOCK		STARTUP[2:0]		
Access				R/W		R/W	R/W	R/W
Reset				0		0	0	0

Bit	7	6	5	4	3	2	1	0
	ONDEMAND	RUNSTDBY				EN32K	ENABLE	
Access	R/W	R/W				R/W	R/W	
Reset	1	0				0	0	

Bits 22:16 – CALIB[6:0] Oscillator Calibration
These bits control the oscillator calibration.
This value must be written by the user.
Factory calibration values can be loaded from the nonvolatile memory.

Bit 12 – WRTLOCK Write Lock
This bit locks the OSC32K register for future writes to fix the OSC32K configuration.

Value	Description
0	The OSC32K configuration is not locked
1	The OSC32K configuration is locked

Bits 10:8 – STARTUP[2:0] Oscillator Start-Up Time
These bits select start-up time for the oscillator.
The OSCULP32K oscillator is used as input clock to the start-up counter.

Table 14-12. Start-Up Time for 32 kHz Internal Oscillator

STARTUP[2:0]	Number of OSC32K clock cycles	Approximate Equivalent Time (OSCULP= 32 kHz)(1)(2)(3)
0x0	3	92 µs
0x1	4	122 µs

© 2025 Microchip Technology Inc. and its subsidiaries

Table 14-12. Start-Up Time for 32 kHz Internal Oscillator (continued)

STARTUP[2:0]	Number of OSC32K clock cycles	Approximate Equivalent Time (OSCULP= 32 kHz)(1)(2)(3)
0x2	6	183 µs
0x3	10	305 µs
0x4	18	549 µs
0x5	34	1038 µs
0x6	66	2014 µs
0x7	130	3967 µs

Notes: 1. Number of cycles for the start-up counter.
2. Number of cycles for the synchronization delay, before PCLKSR.OSC32KRDY is set.
3. Start-up time is n OSC32K cycles + 2 OSC32K cycles.

Bit 7 – ONDEMAND On Demand Control

The On Demand operation mode allows an oscillator to be enabled or disabled depending on peripheral clock requests.
In On Demand operation mode (i.e., if the ONDEMAND bit has been previously written to one), the oscillator will only be running when requested by a peripheral. If there is no peripheral requesting the oscillator s clock source, the oscillator will be in a disabled state.
If On Demand is disabled the oscillator will always be running when enabled.
In Standby Sleep mode, the On Demand operation is still active if the OSC32K.RUNSTDBY bit is one. If OSC32K.RUNSTDBY is zero, the oscillator is disabled.

Value	Description
0	The oscillator is always on, if enabled
1	The oscillator is enabled when a peripheral is requesting the oscillator to be used as a clock source. The oscillator is disabled if no peripheral is requesting the clock source.

Bit 6 – RUNSTDBY Run in Standby

This bit controls how the OSC32K behaves during Standby Sleep mode:

Value	Description
0	The oscillator is disabled in Standby Sleep mode
1	The oscillator is not stopped in Standby Sleep mode. If OSC32K.ONDEMAND is one, the clock source will be running when a peripheral is requesting the clock. If OSC32K.ONDEMAND is zero, the clock source will always be running in Standby Sleep mode.

Bit 2 – EN32K 32 kHz Output Enable

Value	Description
0	The 32 kHz output is disabled
1	The 32 kHz output is enabled
0	The oscillator is disabled
1	The oscillator is enabled

Bit 1 – ENABLE Oscillator Enable

Value	Description
0	The oscillator is disabled
1	The oscillator is enabled

© 2025 Microchip Technology Inc. and its subsidiaries

14.7.8. 32 kHz Ultra Low-Power Internal Oscillator (OSCULP32K) Control

Name: OSCULP32K
Offset: 0x1C
Reset: 0xXX
Property: Write-Protected

Table 14-13. Register Bit Attribute Legend

Symbol	Description	Symbol	Description	Symbol	Description
R	Readable bit	**HC**	Cleared by Hardware	(Grey cell)	Unimplemented
W	Writable bit	**HS**	Set by Hardware	**X**	Bit is unknown at Reset
K	Write to clear	**S**	Software settable bit	—	—

Bit	7	6	5	4	3	2	1	0
	WRTLOCK			CALIB[4:0]				
Access	R/W			R/W	R/W	R/W	R/W	R/W
Reset	0			x	x	x	x	x

Bit 7 – WRTLOCK Write Lock
This bit locks the OSCULP32K register for future writes to fix the OSCULP32K configuration.

Value	Description
0	The OSCULP32K configuration is not locked
1	The OSCULP32K configuration is locked

Bits 4:0 – CALIB[4:0] Oscillator Calibration
These bits control the oscillator calibration.
These bits are loaded from Flash Calibration at start-up.

© 2025 Microchip Technology Inc. and its subsidiaries

14.7.9. 8 MHz Internal Oscillator (OSC8M) Control

Name: OSC8M
Offset: 0x20
Reset: 0xXXXX0382
Property: Write-Protected

Table 14-14. Register Bit Attribute Legend

Symbol	Description	Symbol	Description	Symbol	Description
R	Readable bit	**HC**	Cleared by Hardware	(Grey cell)	Unimplemented
W	Writable bit	**HS**	Set by Hardware	**X**	Bit is unknown at Reset
K	Write to clear	**S**	Software settable bit	—	—

Bit	31	30	29	28	27	26	25	24
	FRANGE[1:0]				CALIB[11:8]			
Access	R/W	R/W			R/W	R/W	R/W	R/W
Reset	x	x			0	0	0	0

Bit	23	22	21	20	19	18	17	16
	CALIB[7:0]							
Access	R/W	R/W	R/W	R/W	R/W	R/W	R/W	R/W
Reset	0	0	0	0	0	0	0	x

Bit	15	14	13	12	11	10	9	8
							PRESC[1:0]	
Access							R/W	R/W
Reset							1	1

Bit	7	6	5	4	3	2	1	0
	ONDEMAND	RUNSTDBY					ENABLE	
Access	R/W	R/W					R/W	
Reset	1	0					1	

Bits 31:30 – FRANGE[1:0] Oscillator Frequency Range
These bits control the oscillator frequency range according to the table below. These bits are loaded from Flash Calibration at start-up.

FRANGE[1:0]	Description
0x0	4 to 6 MHz
0x1	6 to 8 MHz
0x2	8 to 11 MHz
0x3	11 to 15 MHz

Bits 27:16 – CALIB[11:0] Oscillator Calibration
These bits control the oscillator calibration. The calibration field is split in two:
CALIB[11:6] is for temperature calibration
CALIB[5:0] is for overall process calibration
These bits are loaded from Flash Calibration at start up.

Bits 9:8 – PRESC[1:0] Oscillator Prescaler
These bits select the oscillator prescaler factor setting according to the table below.

PRESC[1:0]	Description
0x0	1

© 2025 Microchip Technology Inc. and its subsidiaries

PRESC (continued)	
PRESC[1:0]	**Description**
0x1	2
0x2	4
0x3	8

Bit 7 – ONDEMAND On Demand Control

Note: The ONDEMANED must be set to 0 before configuring DFLL.

The On Demand operation mode allows an oscillator to be enabled or disabled depending on peripheral clock requests.
In On Demand operation mode (i.e., if the ONDEMAND bit has been previously written to one), the oscillator will only be running when requested by a peripheral. If there is no peripheral requesting the oscillator's clock source, the oscillator will be in a disabled state.
If On Demand is disabled the oscillator will always be running when enabled.
In Standby Sleep mode, the On Demand operation is still active if the OSC8M.RUNSTDBY bit is one. If OSC8M.RUNSTDBY is zero, the oscillator is disabled.

Value	Description
0	The oscillator is always on, if enabled
1	The oscillator is enabled when a peripheral is requesting the oscillator to be used as a clock source. The oscillator is disabled if no peripheral is requesting the clock source.

Bit 6 – RUNSTDBY Run in Standby

This bit controls how the OSC8M behaves during Standby Sleep mode:

Value	Description
0	The oscillator is disabled in Standby Sleep mode.
1	The oscillator is not stopped in Standby Sleep mode. If OSC8M.ONDEMAND is one, the clock source will be running when a peripheral is requesting the clock. If OSC8M.ONDEMAND is zero, the clock source will always be running in Standby Sleep mode.

Bit 1 – ENABLE Oscillator Enable

The user must ensure that the OSC8M is fully disabled before enabling it, and that the OSC8M is fully enabled before disabling it by reading OSC8M.ENABLE.

Value	Description
0	The oscillator is disabled or being enabled
1	The oscillator is enabled or being disabled

© 2025 Microchip Technology Inc. and its subsidiaries

14.7.10. DFLL48M Control

Name: DFLLCTRL
Offset: 0x24
Reset: 0x0080
Property: Write-Protected, Write-Synchronized

Table 14-15. Register Bit Attribute Legend

Symbol	Description	Symbol	Description	Symbol	Description
R	Readable bit	**HC**	Cleared by Hardware	(Grey cell)	Unimplemented
W	Writable bit	**HS**	Set by Hardware	**X**	Bit is unknown at Reset
K	Write to clear	**S**	Software settable bit	—	—

Bit	15	14	13	12	11	10	9	8
							QLDIS	CCDIS
Access							R/W	R/W
Reset							0	0

Bit	7	6	5	4	3	2	1	0
	ONDEMAND			LLAW	STABLE	MODE	ENABLE	
Access	R/W			R/W	R/W	R/W	R/W	
Reset	1			0	0	0	0	

Bit 9 – QLDIS Quick Lock Disable

Value	Description
0	Quick Lock is enabled.
1	Quick Lock is disabled.

Bit 8 – CCDIS Chill Cycle Disable

Value	Description
0	Chill Cycle is enabled.
1	Chill Cycle is disabled.

Bit 7 – ONDEMAND On Demand Control

The On Demand operation mode allows an oscillator to be enabled or disabled depending on peripheral clock requests.
In On Demand operation mode, i.e., if the ONDEMAND bit has been previously written to one, the oscillator will only be running when requested by a peripheral. If there is no peripheral requesting the oscillator's clock source, the oscillator will be in a disabled state.
If On Demand is disabled the oscillator will always be running when enabled.

Value	Description
0	The oscillator is always on, if enabled.
1	The oscillator is enabled when a peripheral is requesting the oscillator to be used as a clock source. The oscillator is disabled if no peripheral is requesting the clock source.

Bit 4 – LLAW Lose Lock After Wake

Value	Description
0	Locks will not be lost after waking up from sleep modes if the DFLL clock has been stopped.
1	Locks will be lost after waking up from sleep modes if the DFLL clock has been stopped.

Bit 3 – STABLE Stable DFLL Frequency

© 2025 Microchip Technology Inc. and its subsidiaries

Value	Description
0	FINE calibration tracks changes in output frequency.
1	FINE calibration register value will be fixed after a fine lock.

Bit 2 – MODE Operating Mode Selection

Value	Description
0	The DFLL operates in open-loop operation.
1	The DFLL operates in closed-loop operation.

Bit 1 – ENABLE DFLL Enable

Due to synchronization, there is delay from updating the register until the peripheral is enabled or disabled. The value written to DFLLCTRL.ENABLE will read back immediately after written.

Value	Description
0	The DFLL oscillator is disabled.
1	The DFLL oscillator is enabled.

© 2025 Microchip Technology Inc. and its subsidiaries

14.7.11. DFLL48M Value

Name: DFLLVAL
Offset: 0x28
Reset: 0x00000000
Property: Read-Synchronized, Write-Protected

Table 14-16. Register Bit Attribute Legend

Symbol	Description	Symbol	Description	Symbol	Description
R	Readable bit	**HC**	Cleared by Hardware	(Grey cell)	Unimplemented
W	Writable bit	**HS**	Set by Hardware	**X**	Bit is unknown at Reset
K	Write to clear	**S**	Software settable bit	—	—

Bit	31	30	29	28	27	26	25	24
	DIFF[15:8]							
Access	R	R	R	R	R	R	R	R
Reset	0	0	0	0	0	0	0	0

Bit	23	22	21	20	19	18	17	16
	DIFF[7:0]							
Access	R	R	R	R	R	R	R	R
Reset	0	0	0	0	0	0	0	0

Bit	15	14	13	12	11	10	9	8
	COARSE[5:0]						FINE[9:8]	
Access	R/W	R/W	R/W	R/W	R/W	R/W	R/W	R/W
Reset	0	0	0	0	0	0	0	0

Bit	7	6	5	4	3	2	1	0
	FINE[7:0]							
Access	R/W	R/W	R/W	R/W	R/W	R/W	R/W	R/W
Reset	0	0	0	0	0	0	0	0

Bits 31:16 – DIFF[15:0] Multiplication Ratio Difference
In Closed-Loop mode (DFLLCTRL.MODE is written to one), this bit group indicates the difference between the ideal number of DFLL cycles and the counted number of cycles. This value is not updated in Open-Loop mode, and should be considered invalid in that case.

Bits 15:10 – COARSE[5:0] Coarse Value
Set the value of the Coarse Calibration register. In Closed-Loop mode, this field is read-only.

Bits 9:0 – FINE[9:0] Fine Value
Set the value of the Fine Calibration register. In Closed-Loop mode, this field is read-only.

© 2025 Microchip Technology Inc. and its subsidiaries

14.7.12. DFLL48M Multiplier

Name: DFLLMUL
Offset: 0x2C
Reset: 0x00000000
Property: Write-Protected

Table 14-17. Register Bit Attribute Legend

Symbol	Description	Symbol	Description	Symbol	Description
R	Readable bit	**HC**	Cleared by Hardware	(Grey cell)	Unimplemented
W	Writable bit	**HS**	Set by Hardware	**X**	Bit is unknown at Reset
K	Write to clear	**S**	Software settable bit	—	—

Bit	31	30	29	28	27	26	25	24
	CSTEP[5:0]						FSTEP[9:8]	
Access	R/W	R/W	R/W	R/W	R/W	R/W	R/W	R/W
Reset	0	0	0	0	0	0	0	0

Bit	23	22	21	20	19	18	17	16
	FSTEP[7:0]							
Access	R/W	R/W	R/W	R/W	R/W	R/W	R/W	R/W
Reset	0	0	0	0	0	0	0	0

Bit	15	14	13	12	11	10	9	8
	MUL[15:8]							
Access	R/W	R/W	R/W	R/W	R/W	R/W	R/W	R/W
Reset	0	0	0	0	0	0	0	0

Bit	7	6	5	4	3	2	1	0
	MUL[7:0]							
Access	R/W	R/W	R/W	R/W	R/W	R/W	R/W	R/W
Reset	0	0	0	0	0	0	0	0

Bits 31:26 – CSTEP[5:0] Coarse Maximum Step
This bit group indicates the maximum step size allowed during coarse adjustment in Closed-Loop mode. When adjusting to a new frequency, the expected output frequency overshoot depends on this step size.

Bits 25:16 – FSTEP[9:0] Fine Maximum Step
This bit group indicates the maximum step size allowed during fine adjustment in Closed-Loop mode. When adjusting to a new frequency, the expected output frequency overshoot depends on this step size.

Bits 15:0 – MUL[15:0] DFLL Multiply Factor
This field determines the ratio of the CLK_DFLL output frequency to the CLK_DFLL_REF input frequency. Writing to the MUL bits will cause locks to be lost and the fine calibration value to be reset to its midpoint.

© 2025 Microchip Technology Inc. and its subsidiaries

14.7.13. DFLL48M Synchronization

Name: DFLLSYNC
Offset: 0x30
Reset: 0x00
Property: Write-Protected

Table 14-18. Register Bit Attribute Legend

Symbol	Description	Symbol	Description	Symbol	Description
R	Readable bit	**HC**	Cleared by Hardware	(Grey cell)	Unimplemented
W	Writable bit	**HS**	Set by Hardware	**X**	Bit is unknown at Reset
K	Write to clear	**S**	Software settable bit	—	—

Bit	7	6	5	4	3	2	1	0
	READREQ							
Access	W							
Reset	0							

Bit 7 – READREQ Read Request
To be able to read the current value of DFLLVAL in Closed-Loop mode, this bit should be written to one. The updated value is available in DFLLVAL when PCLKSR.DFLLRDY is set.

© 2025 Microchip Technology Inc. and its subsidiaries

14.7.14. 3.3V Brown-Out Detector (BOD33) Control

Name: BOD33
Offset: 0x34
Reset: 0x00XX00XX
Property: Write-Protected, Write-Synchronized

Table 14-19. Register Bit Attribute Legend

Symbol	Description	Symbol	Description	Symbol	Description
R	Readable bit	**HC**	Cleared by Hardware	(Grey cell)	Unimplemented
W	Writable bit	**HS**	Set by Hardware	**X**	Bit is unknown at Reset
K	Write to clear	**S**	Software settable bit	—	—

Bit	31	30	29	28	27	26	25	24
Access								
Reset								

Bit	23	22	21	20	19	18	17	16
			LEVEL[5:0]					
Access			R/W	R/W	R/W	R/W	R/W	R/W
Reset			x	x	x	x	x	x

Bit	15	14	13	12	11	10	9	8
	PSEL[3:0]						CEN	MODE
Access	R/W	R/W	R/W	R/W			R/W	R/W
Reset	0	0	0	0			0	0

Bit	7	6	5	4	3	2	1	0
		RUNSTDBY		ACTION[1:0]		HYST	ENABLE	
Access		R/W		R/W	R/W	R/W	R/W	
Reset		0		x	x	x	x	

Bits 21:16 – LEVEL[5:0] BOD33 Threshold Level
This field sets the triggering voltage threshold for the BOD33. See the *Electrical Characteristics* for actual voltage levels. Note that any change to the LEVEL field of the BOD33 register should be done when the BOD33 is disabled in order to avoid spurious Resets or interrupts.
These bits are loaded from Flash User Row at start-up. Refer to *NVM User Row Mapping* for more details.

Bits 15:12 – PSEL[3:0] Prescaler Select
Selects the prescaler divide-by output for the BOD33 Sampling mode according to the table below. The input clock comes from the OSCULP32K 1 kHz output.

PSEL[3:0]	Name	Description
0x0	DIV2	Divide clock by 2
0x1	DIV4	Divide clock by 4
0x2	DIV8	Divide clock by 8
0x3	DIV16	Divide clock by 16
0x4	DIV32	Divide clock by 32
0x5	DIV64	Divide clock by 64
0x6	DIV128	Divide clock by 128
0x7	DIV256	Divide clock by 256
0x8	DIV512	Divide clock by 512

© 2025 Microchip Technology Inc. and its subsidiaries

PSEL (continued)		
PSEL[3:0]	Name	Description
0x9	DIV1K	Divide clock by 1024
0xA	DIV2K	Divide clock by 2048
0xB	DIV4K	Divide clock by 4096
0xC	DIV8K	Divide clock by 8192
0xD	DIV16K	Divide clock by 16384
0xE	DIV32K	Divide clock by 32768
0xF	DIV64K	Divide clock by 65536

Bit 9 – CEN Clock Enable

Writing a zero to this bit will stop the BOD33 sampling clock.
Writing a one to this bit will start the BOD33 sampling clock.

Value	Description
0	The BOD33 sampling clock is either disabled and stopped, or enabled but not yet stable.
1	The BOD33 sampling clock is either enabled and stable, or disabled but not yet stopped.

Bit 8 – MODE Operation Mode

Value	Description
0	The BOD33 operates in Continuous mode
1	The BOD33 operates in Sampling mode

Bit 6 – RUNSTDBY Run in Standby

Value	Description
0	The BOD33 is disabled in Standby Sleep mode
1	The BOD33 is enabled in Standby Sleep mode

Bits 4:3 – ACTION[1:0] BOD33 Action

These bits are used to select the BOD33 action when the supply voltage crosses below the BOD33 threshold.
These bits are loaded from Flash User Row at start-up.

ACTION[1:0]	Name	Description
0x0	NONE	No action
0x1	RESET	The BOD33 generates a Reset
0x2	INTERRUPT	The BOD33 generates an interrupt
0x3		Reserved

Bit 2 – HYST Hysteresis

This bit indicates whether hysteresis is enabled for the BOD33 threshold voltage:
This bit is loaded from Flash User Row at start-up. Refer to *NVM User Row Mapping* for more details.

Value	Description
0	No hysteresis
1	Hysteresis enabled

Bit 1 – ENABLE Enable

This bit is loaded from Flash User Row at start-up. Refer to *NVM User Row Mapping* for more details.

Value	Description
0	BOD33 is disabled
1	BOD33 is enabled

© 2025 Microchip Technology Inc. and its subsidiaries

14.7.15. Voltage Regulator System (VREG) Control

Name: VREG
Offset: 0x3C
Reset: 0x0X02
Property: Write-Protected

Table 14-20. Register Bit Attribute Legend

Symbol	Description	Symbol	Description	Symbol	Description
R	Readable bit	**HC**	Cleared by Hardware	(Grey cell)	Unimplemented
W	Writable bit	**HS**	Set by Hardware	**X**	Bit is unknown at Reset
K	Write to clear	**S**	Software settable bit	—	—

Bit	15	14	13	12	11	10	9	8
			FORCELDO					
Access			R/W					
Reset			0					

Bit	7	6	5	4	3	2	1	0
		RUNSTDBY					ENABLE	
Access		R/W					R/W	
Reset		0					1	

Bit 13 – FORCELDO Force LDO Voltage Regulator

Value	Description
0	The voltage regulator is in low-power and low-drive configuration in Standby Sleep mode
1	The voltage regulator is in low-power and high-drive configuration in Standby Sleep mode

Bit 6 – RUNSTDBY Run in Standby

Value	Description
0	The voltage regulator is in low-power configuration in Standby Sleep mode
1	The voltage regulator is in normal configuration in Standby Sleep mode

Bit 1 – ENABLE
Must be set to 1.

© 2025 Microchip Technology Inc. and its subsidiaries

14.7.16. Voltage References System (VREF) Control

Name: VREF
Offset: 0x40
Reset: 0x0XXX0000
Property: Write-Protected

Table 14-21. Register Bit Attribute Legend

Symbol	Description	Symbol	Description	Symbol	Description
R	Readable bit	**HC**	Cleared by Hardware	(Grey cell)	Unimplemented
W	Writable bit	**HS**	Set by Hardware	**X**	Bit is unknown at Reset
K	Write to clear	**S**	Software settable bit	—	—

Bit	31	30	29	28	27	26	25	24
						CALIB[10:8]		
Access						R/W	R/W	R/W
Reset						x	x	x

Bit	23	22	21	20	19	18	17	16
	CALIB[7:0]							
Access	R/W	R/W	R/W	R/W	R/W	R/W	R/W	R/W
Reset	x	x	x	x	x	x	x	x

Bit	15	14	13	12	11	10	9	8
Access								
Reset								

Bit	7	6	5	4	3	2	1	0
						BGOUTEN	TSEN	
Access						R/W	R/W	
Reset						0	0	

Bits 26:16 – CALIB[10:0] Bandgap Voltage Generator Calibration
These bits are used to calibrate the output level of the bandgap voltage reference. These bits are loaded from Flash Calibration Row at start-up.

Bit 2 – BGOUTEN Bandgap Output Enable

Value	Description
0	The bandgap output is not available as an ADC input channel
1	The bandgap output is routed to an ADC input channel

Bit 1 – TSEN Temperature Sensor Enable(1)

Value	Description
0	Temperature sensor is disabled
1	Temperature sensor is enabled and routed to an ADC input channel

© 2025 Microchip Technology Inc. and its subsidiaries

15. WDT – Watchdog Timer

15.1. Overview

The Watchdog Timer (WDT) is a system function for monitoring correct program operation. It makes it possible to recover from error situations such as runaway or deadlocked code. The WDT is configured to a predefined time-out period, and is constantly running when enabled. If the WDT is not cleared within the time-out period, it will issue a system Reset. An early-warning interrupt is available to indicate an upcoming Watchdog Time-out condition.

The Window mode makes it possible to define a time slot (or window) inside the total time-out period during which the WDT must be cleared. If the WDT is cleared outside this window, either too early or too late, a system Reset will be issued. Compared to the Normal mode, this can also catch situations where a code error causes the WDT to be cleared frequently.

When enabled, the WDT will run in Active mode and all Sleep modes. It is asynchronous and runs from a CPU-independent clock source. The WDT will continue operation and issue a system Reset or interrupt even if the main clocks fail.

15.2. Features

- Issues a System Reset if the Watchdog Timer is not Cleared Before its Time-out Period
- Early Warning Interrupt Generation
- Asynchronous Operation from Dedicated Oscillator
- Two Types of Operation:
  - Normal mode
  - Window mode
- Selectable Time-out Periods
  - From 8 cycles to 16,000 cycles in Normal mode
  - From 16 cycles to 32,000 cycles in Window mode
- Always-on Capability

15.3. Block Diagram

Figure 15-1. WDT Block Diagram

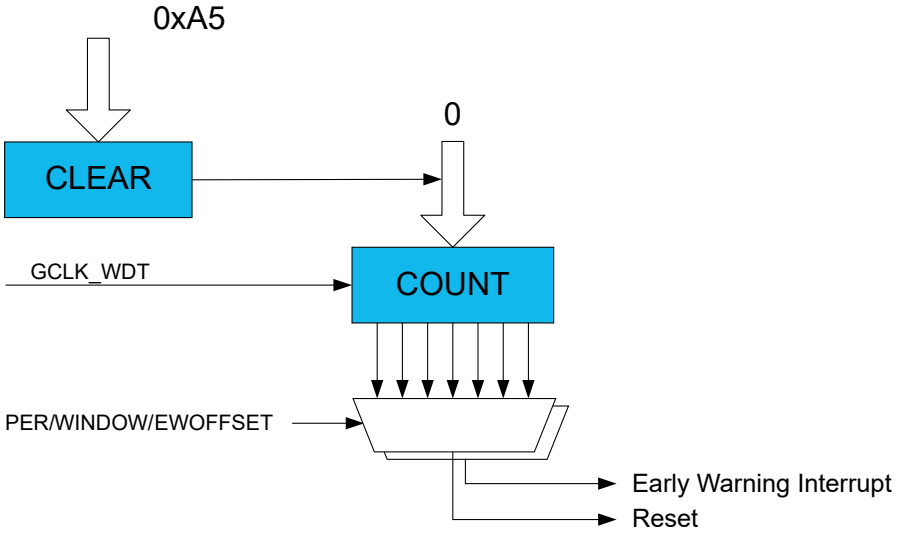

© 2025 Microchip Technology Inc. and its subsidiaries

15.4. Signal Description

Not applicable.

15.5. Peripheral Dependencies

Table 15-1. Peripherals Configuration Summary

Peripheral Name	Base Address	IRQ Line	AHB Clock		APB Clock		Generic Clock	PAC		Events		
			Index	Enabled at Reset	Index	Enabled at Reset	Index	Index	Prot at Reset	User	Generator	SleepWalking
WDT	0x40001000	2			4	Y	1	4	N			

15.5.1. I/O Lines

Not applicable.

15.5.2. Power Management

The WDT can continue to operate in any Sleep mode where the selected source clock is running. The WDT interrupts can be used to wake-up the device from Sleep modes. The events can trigger other operations in the system without exiting Sleep modes.

15.5.3. Clocks

The WDT bus clock (CLK_WDT_APB) is enabled by default, and can be enabled and disabled in the Power Manager. Refer to *PM – Power Manager* for details.

A generic clock (GCLK_WDT) is required to clock the WDT. This clock must be configured and enabled in the generic clock controller before using the WDT. Refer to *GCLK – Generic Clock Controller* for details. This generic clock is asynchronous to the user interface clock (CLK_WDT_APB). Due to this asynchronicity, accessing certain registers will require synchronization between the clock domains. Refer to *Synchronization* for further details.

GCLK_WDT is intended to be sourced from the clock of the internal Ultra Low-Power (ULP) oscillator. Due to the ULP design, the oscillator is not very accurate, and so the exact time-out period may vary from device to device. This variation must be kept in mind when designing software that uses the WDT to ensure that the time-out periods used are valid for all devices. For more information on ULP oscillator accuracy, consult the *Ultra Low-Power Internal 32 kHz RC Oscillator (OSCULP32K) Characteristics*.

GCLK_WDT can also be clocked from other sources if a more accurate clock is needed, but at the cost of higher power consumption.

15.5.4. Interrupts

The interrupt request line is connected to the interrupt controller. Using the WDT interrupt(s) requires the interrupt controller to be configured first.

15.5.5. Events

Not applicable.

15.5.6. Debug Operation

When the CPU is halted in Debug mode the WDT will halt normal operation.

15.5.7. Register Access Protection

Registers with write access can be optionally write-protected by the Peripheral Access Controller (PAC), except for the following:

- Interrupt Flag Status and Clear register (INTFLAG)

Note: Optional write protection is indicated by the "PAC Write Protection" property in the register description.

© 2025 Microchip Technology Inc. and its subsidiaries

15.5.8. Analog Connections

Not applicable.

15.6. Functional Description

15.6.1. Principle of Operation

The Watchdog Timer (WDT) is a system for monitoring correct program operation, making it possible to recover from error situations such as runaway code, by issuing a Reset. When enabled, the WDT is a constantly running timer that is configured to a predefined time-out period. Before the end of the time-out period, the WDT should be set back, or else, a system Reset is issued.

The WDT has two modes of operation, Normal mode and Window mode. Both modes offer the option of Early Warning interrupt generation. The description for each of the basic modes is given below. The settings in the Control register (CTRL) and the Interrupt Enable register (handled by INTENCLR/SET) determine the mode of operation:

Table 15-2. WDT Operating Modes

CTRL.ENABLE	CTRL.WEN	INTENSET.EW	Mode
0	x	x	Stopped
1	0	0	Normal
1	0	1	Normal with Early Warning interrupt
1	1	0	Window
1	1	1	Window with Early Warning interrupt

15.6.2. Basic Operation

15.6.2.1. Initialization

The following bits are enable-protected:

- Window Mode Enable in the Control register (CTRL.WEN)
- Always-On in the Control register (CTRL-ALWAYSON)

The following registers are enable-protected:

- Configuration register (CONFIG)
- Early Warning Interrupt Control register (EWCTRL)

Any writes to these bits or registers when the WDT is enabled or is being enabled (CTRL.ENABLE=1) will be discarded. Writes to these registers while the WDT is being disabled will be completed after the disabling is complete.

Enable-protection is denoted by the enable-protected property in the register description.

Initialization of the WDT can be done only while the WDT is disabled. The WDT is configured by defining the required Time-Out Period bits in the Configuration register (CONFIG.PER). If Window mode operation is required, the Window Enable bit in the Control register (CTRL.WEN) must be written to one and the Window Period bits in the Configuration register (CONFIG.WINDOW) must be defined.

Normal Mode

- Defining the required Time-Out Period bits in the Configuration register (CONFIG.PER).

Normal Mode with Early Warning Interrupt

- Defining the required Time-Out Period bits in the Configuration register (CONFIG.PER).
- Defining Early Warning Interrupt Time Offset bits in the Early Warning Interrupt Control register (EWCTRL. EWOFFSET).

© 2025 Microchip Technology Inc. and its subsidiaries

- Setting Early Warning Interrupt Enable bit in the Interrupt Enable Set register (INTENSET.EW).

Window Mode

- Defining Time-Out Period bits in the Configuration register (CONFIG.PER).
- Defining Window mode Time-Out Period bits in the Configuration register (CONFIG.WINDOW).
- Setting Window Enable bit in the Control register (CTRL.WEN).

Window Mode with Early Warning Interrupt

- Defining Time-Out Period bits in the Configuration register (CONFIG.PER).
- Defining Window mode Time-Out Period bits in the Configuration register (CONFIG.WINDOW).
- Setting Window Enable bit in the Control register (CTRL.WEN).
- Defining Early Warning Interrupt Time Offset bits in the Early Warning Interrupt Control register (EWCTRL. EWOFFSET).
- Setting Early Warning Interrupt Enable bit in the Interrupt Enable Set register (INTENSET.EW).

15.6.2.2. Configurable Reset Values

After a Power-on Reset, some registers will be loaded with initial values from the NVM User Row. Refer to *NVM User Row Mapping* for more details.

This encompasses the following bits and bit groups:

- Enable bit in the Control register, CTRL.ENABLE
- Always-On bit in the Control register, CTRL.ALWAYSON
- Watchdog Timer Windows Mode Enable bit in the Control register, CTRL.WEN
- Watchdog Timer Windows Mode Time-Out Period bits in the Configuration register, CONFIG.WINDOW
- Time-Out Period in the Configuration register, CONFIG.PER
- Early Warning Interrupt Time Offset bits in the Early Warning Interrupt Control register, EWCTRL.EWOFFSET

For more information about fuse locations, see *NVM User Row Mapping*.

15.6.2.3. Enabling and Disabling

The WDT is enabled by writing a '1' to the Enable bit in the Control register (CTRL.ENABLE). The WDT is disabled by writing a '0' to CTRL.ENABLE.

The WDT can be disabled only if the Always-On bit in the Control register (CTRL.ALWAYSON) is '0'.

15.6.2.4. Normal Mode

In Normal mode operation, the length of a time-out period is configured in CONFIG.PER. The WDT is enabled by writing a '1' to the Enable bit in the Control register (CTRL.ENABLE). Once enabled, the WDT will issue a system Reset if a time-out occurs. This can be prevented by clearing the WDT at any time during the time-out period.

The WDT is cleared and a new WDT time-out period is started by writing 0xA5 to the Clear register (CLEAR). Writing any other value than 0xA5 to CLEAR will issue an immediate system Reset.

There are 12 possible WDT time-out (TO_{WDT}) periods, selectable from 8ms to 16s.

By default, the early warning interrupt is disabled. If it is desired, the Early Warning Interrupt Enable bit in the Interrupt Enable register (INTENSET.EW) must be written to '1'. The Early Warning Interrupt is disabled again by writing a '1' to the Early Warning Interrupt bit in the Interrupt Enable Clear register (INTENCLR.EW). If the early warning interrupt is enabled, an interrupt is generated prior to a WDT Time-out condition. In Normal mode, the Early Warning Offset bits in the Early Warning Interrupt Control register, EWCTRL.EWOFFSET, define the time when the early warning interrupt occurs. The Normal mode operation is illustrated in the figure Normal mode operation.

© 2025 Microchip Technology Inc. and its subsidiaries

Figure 15-2. Normal Mode Operation

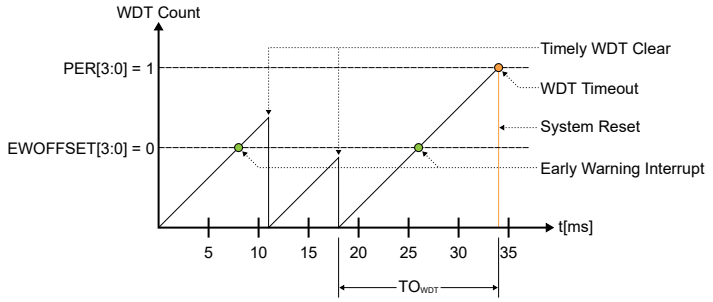

15.6.2.5. Window Mode

In Window mode operation, the WDT uses two different time specifications: the WDT can only be cleared by writing 0xA5 to the CLEAR register after the closed window time-out period (TO_{WDTW}), during the subsequent Normal time-out period (TO_{WDTW}). If the WDT is cleared before the time window opens (before TO_{WDTW} is over), the WDT will issue a system Reset. Both parameters TO_{WDTW} and TO_{WDT} are periods in a range from 8ms to 16s, so the total duration of the WDT time-out period is the sum of the two parameters. The closed window period is defined by the Window Period bits in the Configuration register (CONFIG.WINDOW), and the open window period is defined by the Period bits in the Configuration register (CONFIG.PER).

By default, the early warning interrupt is disabled. If it is desired, the Early Warning Interrupt Enable bit in the Interrupt Enable register (INTENSET.EW) must be written to '`1`'. The Early Warning Interrupt is disabled again by writing a '`1`' to the Early Warning Interrupt bit in the Interrupt Enable Clear (INTENCLR.EW) register. If the Early Warning interrupt is enabled in Window mode, the interrupt is generated at the start of the open window period (i.e. after TO_{WDTW}). The Window mode operation is illustrated in figure Window mode operation.

Figure 15-3. Window Mode Operation

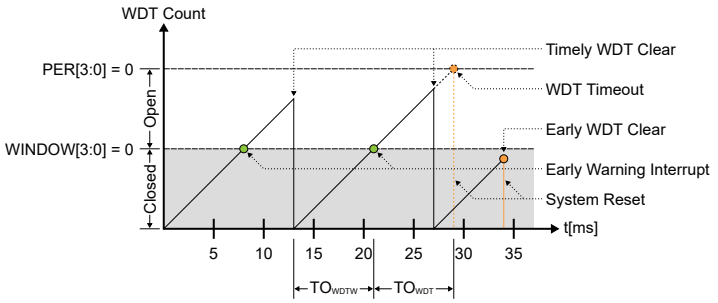

15.6.3. Additional Features

15.6.3.1. Always-On Mode

The Always-On mode is enabled by setting the Always-On bit in the Control register (CTRLA.ALWAYSON=`1`). When the Always-On mode is enabled, the WDT runs continuously, regardless of the state of CTRL.ENABLE. Once written, the Always-On bit can only be cleared by a Power-on Reset (POR). The Configuration (CONFIG) and Early Warning Control (EWCTRL) registers are read-only registers while the CTRL.ALWAYSON bit is set. Thus, the time period configuration bits (CONFIG.PER, CONFIG.WINDOW, EWCTRL.EWOFFSET) of the WDT cannot be changed.

Enabling or disabling Window mode operation by writing the Window Enable bit (CTRLA.WEN) is allowed while in Always-On mode, but note that CONFIG.PER cannot be changed.

© 2025 Microchip Technology Inc. and its subsidiaries

The CTRL.ALWAYSON bit must never be set to one by software if any of the following conditions is true:

1. The GCLK_WDT is disabled
2. The clock generator for the GCLK_WDT is disabled
3. The source clock of the clock generator for the GCLK_WDT is disabled or off

The Interrupt Clear and Interrupt Set registers are accessible in the Always-On mode. The Early Warning interrupt can still be enabled or disabled while in the Always-On mode, but note that EWCTRL.EWOFFSET cannot be changed.

Table 15-3. WDT Operating Modes With Always-On

WEN	Interrupt enable	Mode
0	0	Always-on and Normal mode
0	1	Always-on and Normal mode with early warning interrupt
1	0	Always-on and Window mode
1	1	Always-on and Window mode with early warning interrupt

15.6.4. Interrupts

The WDT has the following interrupt source:

- Early Warning (EW)

Each interrupt source has an Interrupt flag associated with it. The Interrupt flag in the Interrupt Flag Status and Clear (INTFLAG) register is set when the Interrupt condition occurs. Each interrupt can be individually enabled by writing a '1' to the corresponding bit in the Interrupt Enable Set (INTENSET) register, and disabled by writing a '1' to the corresponding bit in the Interrupt Enable Clear (INTENCLR) register.

An interrupt request is generated when the Interrupt flag is set and the corresponding interrupt is enabled. The interrupt request remains active until the Interrupt flag is cleared, the interrupt is disabled, or the WDT is reset. See the INTFLAG register description for details on how to clear Interrupt flags.

The WDT has one common interrupt request line for all the interrupt sources. The user must read the INTFLAG register to determine which Interrupt condition is present.

Note: Interrupts must be globally enabled for interrupt requests to be generated.

The Early Warning interrupt behaves differently in Normal mode and in Window mode. In Normal mode, the Early Warning interrupt generation is defined by the Early Warning Offset in the Early Warning Control register (EWCTRL.EWOFFSET). The Early Warning Offset bits define the number of GCLK_WDT clocks before the interrupt is generated, relative to the start of the Watchdog Time-out period. For example, if the WDT is operating in Normal mode with CONFIG.PER = 0x2 and EWCTRL.EWOFFSET = 0x1, the Early Warning interrupt is generated 16 GCLK_WDT clock cycles from the start of the Watchdog Time-out period, and the Watchdog Time-out system Reset is generated 32 GCLK_WDT clock cycles from the start of the Watchdog Time-out period. The user must take caution when programming the Early Warning Offset bits. If these bits define an Early Warning interrupt generation time greater than the Watchdog Time-out period, the Watchdog Time-out system Reset is generated prior to the Early Warning interrupt. Thus, the Early Warning interrupt will never be generated.

In Window mode, the Early Warning interrupt is generated at the start of the open window period. In a typical application where the system is in Sleep mode, it can use this interrupt to wake-up and clear the Watchdog Timer, after which the system can perform other tasks or return to Sleep mode.

© 2025 Microchip Technology Inc. and its subsidiaries

15.6.5. Synchronization

Due to asynchronicity between the main clock domain and the peripheral clock domains, some registers need to be synchronized when written or read.

When executing an operation that requires synchronization, the Synchronization Busy bit in the Status register (STATUS.SYNCBUSY) will be set immediately, and cleared when synchronization is complete.

If an operation that requires synchronization is executed while STATUS.SYNCBUSY=`1`, the bus will be stalled. All operations will complete successfully, but the CPU will be stalled and interrupts will be pending as long as the bus is stalled.

The following registers are synchronized when written:

- Control register (CTRL)
- Clear register (CLEAR)

Required write synchronization is denoted by the "Write-Synchronized" property in the register description.

© 2025 Microchip Technology Inc. and its subsidiaries

15.7. Register Summary

Offset	Name	Bit Pos.	7	6	5	4	3	2	1	0
0x00	CTRL	7:0	ALWAYSON					WEN	ENABLE	
0x01	CONFIG	7:0	WINDOW[3:0]				PER[3:0]			
0x02	EWCTRL	7:0					EWOFFSET[3:0]			
0x03	Reserved									
0x04	INTENCLR	7:0								EW
0x05	INTENSET	7:0								EW
0x06	INTFLAG	7:0								EW
0x07	STATUS	7:0	SYNCBUSY							
0x08	CLEAR	7:0	CLEAR[7:0]							

© 2025 Microchip Technology Inc. and its subsidiaries

15.7.1. Control

Name: CTRL
Offset: 0x0
Reset: N/A - Loaded from NVM User Row at start-up
Property: Write-Protected, Enable-Protected, Write-Synchronized

Table 15-4. Register Bit Attribute Legend

Symbol	Description	Symbol	Description	Symbol	Description
R	Readable bit	**HC**	Cleared by Hardware	(Grey cell)	Unimplemented
W	Writable bit	**HS**	Set by Hardware	**X**	Bit is unknown at Reset
K	Write to clear	**S**	Software settable bit	—	—

Bit	7	6	5	4	3	2	1	0
	ALWAYSON					WEN	ENABLE	
Access	R/W					R/W	R/W	
Reset	x					x	x	

Bit 7 – ALWAYSON Always-On

This bit allows the WDT to run continuously. After being written to one, this bit cannot be written to zero, and the WDT will remain enabled until a Power Reset is received. When this bit is one, the Control register (CTRL), the Configuration register (CONFIG) and the Early Warning Control register (EWCTRL) will be read-only, and any writes to these registers are not allowed. Writing a zero to this bit has no effect.
This bit is not enable-protected.
These bits are loaded from NVM User Row at start-up. Refer to *NVM User Row Mapping* for more details.

Value	Description
0	The WDT is enabled and disabled through the ENABLE bit
1	The WDT is enabled and can only be disabled by a Power Reset (POR)

Bit 2 – WEN Watchdog Timer Window Mode Enable

The initial value of this bit is loaded from Flash Calibration.
This bit is loaded from NVM User Row at start-up. Refer to *NVM User Row Mapping* for more details.

Value	Description
0	Window mode is disabled (normal operation).
1	Window mode is enabled.

Bit 1 – ENABLE Enable

This bit enables or disables the WDT. Can only be written while CTRL.ALWAYSON is zero.
Due to synchronization, there is delay from writing CTRL.ENABLE until the peripheral is enabled/disabled. The value written to CTRL.ENABLE will read back immediately, and the Synchronization Busy bit in the Status register (STATUS.SYNCBUSY) will be set. STATUS.SYNCBUSY will be cleared when the operation is complete.
This bit is not enable-protected.
This bit is loaded from NVM User Row at start-up. Refer to *NVM User Row Mapping* for more details.

Value	Description
0	The WDT is disabled
1	The WDT is enabled

© 2025 Microchip Technology Inc. and its subsidiaries

15.7.2. Configuration

Name: CONFIG
Offset: 0x1
Reset: N/A - Loaded from NVM User Row at start-up
Property: Write-Protected, Enable-Protected, Write-Synchronized

Table 15-5. Register Bit Attribute Legend

Symbol	Description	Symbol	Description	Symbol	Description
R	Readable bit	**HC**	Cleared by Hardware	(Grey cell)	Unimplemented
W	Writable bit	**HS**	Set by Hardware	**X**	Bit is unknown at Reset
K	Write to clear	**S**	Software settable bit	—	—

Bit	7	6	5	4	3	2	1	0
	WINDOW[3:0]				PER[3:0]			
Access	R/W	R/W	R/W	R/W	R/W	R/W	R/W	R/W
Reset	x	x	x	x	x	x	x	x

Bits 7:4 – WINDOW[3:0] Window Mode Time-Out Period
In Window mode, these bits determine the watchdog closed window period as a number of oscillator cycles.
These bits are loaded from NVM User Row at start-up. Refer to *NVM User Row Mapping* for more details.

Value	Description
0x0	8 clock cycles
0x1	16 clock cycles
0x2	32 clock cycles
0x3	64 clock cycles
0x4	128 clock cycles
0x5	256 clocks cycles
0x6	512 clocks cycles
0x7	1024 clock cycles
0x8	2048 clock cycles
0x9	4096 clock cycles
0xA	8192 clock cycles
0xB	16384 clock cycles
0xC-0xF	Reserved

Bits 3:0 – PER[3:0] Time-Out Period
These bits determine the Watchdog Time-out period as a number of GCLK_WDT clock cycles. In Window mode operation, these bits define the open window period.
These bits are loaded from NVM User Row at start-up. Refer to *NVM User Row Mapping* for more details.

Value	Description
0x0	8 clock cycles
0x1	16 clock cycles
0x2	32 clock cycles
0x3	64 clock cycles
0x4	128 clock cycles
0x5	256 clocks cycles
0x6	512 clocks cycles
0x7	1024 clock cycles

© 2025 Microchip Technology Inc. and its subsidiaries

Value	Description
0x8	2048 clock cycles
0x9	4096 clock cycles
0xA	8192 clock cycles
0xB	16384 clock cycles
0xC-0xF	Reserved

© 2025 Microchip Technology Inc. and its subsidiaries

15.7.3. Early Warning Interrupt Control

Name: EWCTRL
Offset: 0x2
Reset: N/A - Loaded from NVM User Row at start-up
Property: Write-Protected, Enable-Protected

Table 15-6. Register Bit Attribute Legend

Symbol	Description	Symbol	Description	Symbol	Description
R	Readable bit	**HC**	Cleared by Hardware	(Grey cell)	Unimplemented
W	Writable bit	**HS**	Set by Hardware	**X**	Bit is unknown at Reset
K	Write to clear	**S**	Software settable bit	—	—

Bit	7	6	5	4	3	2	1	0
					EWOFFSET[3:0]			
Access					R/W	R/W	R/W	R/W
Reset					x	x	x	x

Bits 3:0 – EWOFFSET[3:0] Early Warning Interrupt Time Offset
These bits determine the number of GCLK_WDT clocks in the offset from the start of the Watchdog Time-out period to when the Early Warning interrupt is generated. These bits are loaded from NVM User Row at start-up. Refer to *NVM User Row Mapping* for more details.

Value	Description
0x0	8 clock cycles
0x1	16 clock cycles
0x2	32 clock cycles
0x3	64 clock cycles
0x4	128 clock cycles
0x5	256 clocks cycles
0x6	512 clocks cycles
0x7	1024 clock cycles
0x8	2048 clock cycles
0x9	4096 clock cycles
0xA	8192 clock cycles
0xB	16384 clock cycles
0xC-0xF	Reserved

© 2025 Microchip Technology Inc. and its subsidiaries

15.7.4. Interrupt Enable Clear

Name: INTENCLR
Offset: 0x4
Reset: 0x00
Property: Write-Protected

Table 15-7. Register Bit Attribute Legend

Symbol	Description	Symbol	Description	Symbol	Description
R	Readable bit	**HC**	Cleared by Hardware	(Grey cell)	Unimplemented
W	Writable bit	**HS**	Set by Hardware	**X**	Bit is unknown at Reset
K	Write to clear	**S**	Software settable bit	—	—

Bit	7	6	5	4	3	2	1	0
								EW
Access								R/W
Reset								0

Bit 0 – EW Early Warning Interrupt Enable
Writing a zero to this bit has no effect.
Writing a one to this bit disables the Early Warning interrupt.

Value	Description
0	The Early Warning interrupt is disabled
1	The Early Warning interrupt is enabled

© 2025 Microchip Technology Inc. and its subsidiaries

15.7.5. Interrupt Enable Set

Name: INTENSET
Offset: 0x5
Reset: 0x00
Property: Write-Protected

Table 15-8. Register Bit Attribute Legend

Symbol	Description	Symbol	Description	Symbol	Description
R	Readable bit	**HC**	Cleared by Hardware	(Grey cell)	Unimplemented
W	Writable bit	**HS**	Set by Hardware	**X**	Bit is unknown at Reset
K	Write to clear	**S**	Software settable bit	—	—

Bit	7	6	5	4	3	2	1	0
								EW
Access								R/W
Reset								0

Bit 0 – EW Early Warning Interrupt Enable
Writing a zero to this bit has no effect.
Writing a one to this bit enables the Early Warning interrupt.

Value	Description
0	The Early Warning interrupt is disabled
1	The Early Warning interrupt is enabled

© 2025 Microchip Technology Inc. and its subsidiaries

15.7.6. Interrupt Flag Status and Clear

Name: INTFLAG
Offset: 0x6
Reset: 0x00
Property: –

Table 15-9. Register Bit Attribute Legend

Symbol	Description	Symbol	Description	Symbol	Description
R	Readable bit	**HC**	Cleared by Hardware	(Grey cell)	Unimplemented
W	Writable bit	**HS**	Set by Hardware	**X**	Bit is unknown at Reset
K	Write to clear	**S**	Software settable bit	—	—

Bit	7	6	5	4	3	2	1	0
								EW
Access								R/W
Reset								0

Bit 0 – EW Early Warning
This flag is set when an Early Warning interrupt occurs, as defined by the EWOFFSET bit group in EWCTRL.
Writing a zero to this bit has no effect.
Writing a one to this bit clears the Early Warning interrupt flag.

© 2025 Microchip Technology Inc. and its subsidiaries

15.7.7. Status

Name: STATUS
Offset: 0x7
Reset: 0x00
Property: –

Table 15-10. Register Bit Attribute Legend

Symbol	Description	Symbol	Description	Symbol	Description
R	Readable bit	**HC**	Cleared by Hardware	(Grey cell)	Unimplemented
W	Writable bit	**HS**	Set by Hardware	**X**	Bit is unknown at Reset
K	Write to clear	**S**	Software settable bit	—	—

Bit	7	6	5	4	3	2	1	0
	SYNCBUSY							
Access	R							
Reset	0							

Bit 7 – SYNCBUSY Synchronization Busy
This bit is cleared when the synchronization of registers between clock domains is complete.
This bit is set when the synchronization of registers between clock domains is started.

© 2025 Microchip Technology Inc. and its subsidiaries

15.7.8. Clear

Name: CLEAR
Offset: 0x8
Reset: 0x00
Property: Write-Protected, Write-Synchronized

Table 15-11. Register Bit Attribute Legend

Symbol	Description	Symbol	Description	Symbol	Description
R	Readable bit	**HC**	Cleared by Hardware	(Grey cell)	Unimplemented
W	Writable bit	**HS**	Set by Hardware	**X**	Bit is unknown at Reset
K	Write to clear	**S**	Software settable bit	—	—

Bit	7	6	5	4	3	2	1	0
	CLEAR[7:0]							
Access	W	W	W	W	W	W	W	W
Reset	0	0	0	0	0	0	0	0

Bits 7:0 – CLEAR[7:0] Watchdog Clear
Writing 0xA5 to this register will clear the Watchdog Timer and the Watchdog Time-out period is restarted. Writing any other value will issue an immediate system Reset.

© 2025 Microchip Technology Inc. and its subsidiaries

16. RTC – Real-Time Counter

16.1. Overview

The Real-Time Counter (RTC) is a 32-bit counter with a 10-bit programmable prescaler that typically runs continuously to keep track of time. The RTC can wake-up the device from Sleep modes using the alarm/compare wake-up, periodic wake-up, or overflow wake-up mechanisms

The RTC can be clocked from several clock sources selectable through the Generic Clock module (GCLK). This GCLK_RTC clock can then be divided with CTRLA.PRESCALER to achieve the required resolution.

The RTC can generate periodic peripheral events from outputs of the prescaler, as well as alarm/compare interrupts and peripheral events, which can trigger at any counter value. Additionally, the timer can trigger an overflow interrupt and peripheral event, and can be Reset on the occurrence of an alarm/compare match. This allows periodic interrupts and peripheral events at very long and accurate intervals.

The 10-bit programmable prescaler can scale down the clock source. By this, a wide range of resolutions and time-out periods can be configured. With a 32.768 kHz clock source, the minimum counter tick interval is 30.5 µs, and time-out periods can range up to 36 hours. For a counter tick interval of 1s, the maximum time-out period is more than 136 years.

16.2. Features

- 32-bit Counter with 10-bit prescaler
- Multiple Clock Sources
- 32-bit or 16-bit Counter mode:
  - One 32-bit or two 16-bit Compare Values
- Clock/Calendar mode:
  - Time in seconds, minutes and hours (12/24)
  - Date in day of month, month and year
  - Leap year correction
- Digital Prescaler Correction/tuning for Increased Accuracy
- Overflow, Alarm/compare Match and Prescaler Interrupts and Events:
  - Optional clear on alarm/compare match

16.3. Block Diagram

Figure 16-1. RTC Block Diagram (Mode 0 — 32-Bit Counter)

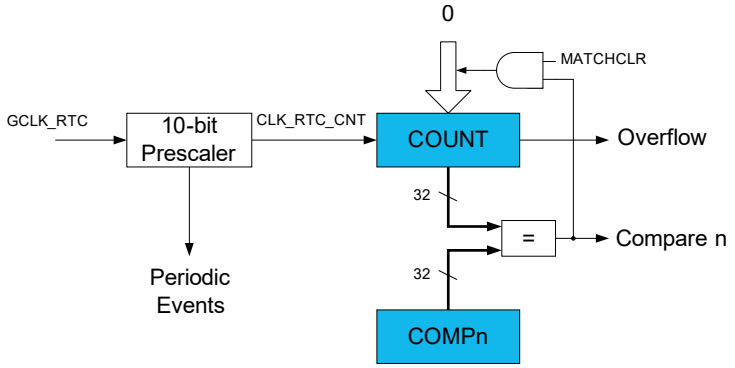

© 2025 Microchip Technology Inc. and its subsidiaries

Figure 16-2. RTC Block Diagram (Mode 1 — 16-Bit Counter)

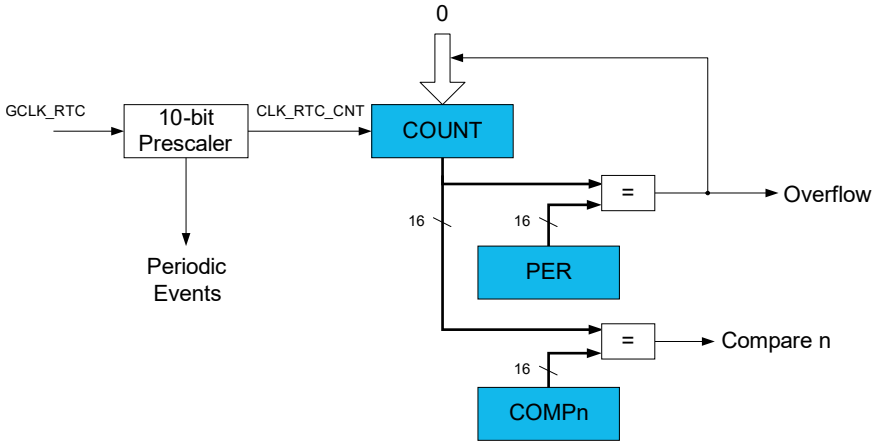

Figure 16-3. RTC Block Diagram (Mode 2 — Clock/Calendar)

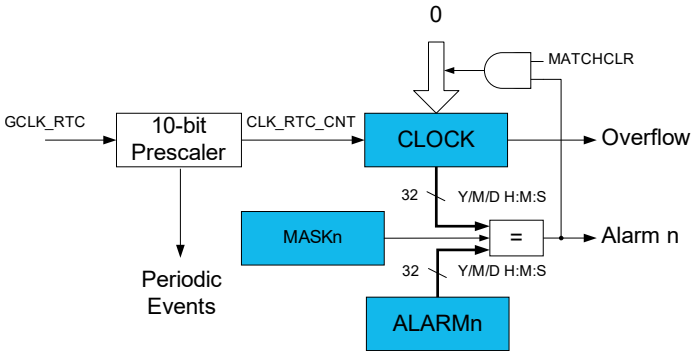

16.4. Signal Description

Not applicable.

16.5. Peripheral Dependencies

Table 16-1. Peripherals Configuration Summary

Peripheral Name	Base Address	IRQ Line	AHB Clock		APB Clock		Generic Clock	PAC		Events		
			Index	Enabled at Reset	Index	Enabled at Reset	Index	Index	Prot at Reset	User	Generator	SleepWalking
RTC	0x40001400	3			5	Y	2	5	N		1: CMP0/ALARM0 2: CMP1 3: OVF 4-11: PER0-7	Y

16.5.1. I/O Lines

Not applicable.

16.5.2. Power Management

The RTC will continue to operate in any Sleep mode where the selected source clock is running. The RTC interrupts can be used to wake-up the device from Sleep modes. Events connected to the Event System can trigger other operations in the system without exiting Sleep modes. Refer to the *Power Manager* for details on the different Sleep modes.

The RTC will be reset only at Power-on Reset (POR) or by setting the Software Reset bit in the Control register (CTRL.SWRST=`1`).

© 2025 Microchip Technology Inc. and its subsidiaries

16.5.3. Clocks

The RTC bus clock (CLK_RTC_APB) can be enabled and disabled in the Power Manager, and the default state of CLK_RTC_APB can be found in the Peripheral Clock Masking section.

A generic clock (GCLK_RTC) is required to clock the RTC. This clock must be configured and enabled in the generic clock controller before using the RTC. Refer to *GCLK – Generic Clock Controller* for details.

This generic clock is asynchronous to the user interface clock (CLK_RTC_APB). Due to this asynchronicity, accessing certain registers will require synchronization between the clock domains. Refer to Synchronization for further details.

The RTC should not work with the Generic Clock Generator 0.

16.5.4. Interrupts

The interrupt request line is connected to the interrupt controller. Using the RTC interrupts requires the interrupt controller to be configured first. Refer to *Nested Vector Interrupt Controller* for details.

16.5.5. DMA

Not applicable.

16.5.6. Events

The events are connected to the *Event System*.

16.5.7. Debug Operation

When the CPU is halted in Debug mode the RTC will halt normal operation. The RTC can be forced to continue operation during debugging. Refer to the Debug Control (DBGCTRL) register for details.

16.5.8. Analog Connections

A 32.768 kHz crystal can be connected to the XIN32 and XOUT32 pins, along with any required load capacitors. For details on recommended crystal characteristics and load capacitors, refer to *Electrical Characteristics* for details.

16.6. Functional Description

16.6.1. Principle of Operation

The RTC keeps track of time in the system and enables periodic events, as well as interrupts and events at a specified time. The RTC consists of a 10-bit prescaler that feeds a 32-bit counter. The actual format of the 32-bit counter depends on the RTC operating mode.

The RTC can function in one of these modes:

- Mode 0 - COUNT32: RTC serves as 32-bit counter
- Mode 1 - COUNT16: RTC serves as 16-bit counter
- Mode 2 - CLOCK: RTC serves as clock/calendar with alarm functionality

16.6.2. Basic Operation

16.6.2.1. Initialization

The following bits are enable-protected, meaning that they can only be written when the RTC is disabled (CTRL.ENABLE=0):

- Operating Mode bits in the Control register (CTRL.MODE)
- Prescaler bits in the Control register (CTRL.PRESCALER)
- Clear on Match bit in the Control register (CTRL.MATCHCLR)

© 2025 Microchip Technology Inc. and its subsidiaries

- Clock Representation bit in the Control register (CTRL.CLKREP)

The following register is enable-protected:

- Event Control register (EVCTRL)

Any writes to these bits or registers when the RTC is enabled or being enabled (CTRL.ENABLE=1) will be discarded. Writes to these bits or registers while the RTC is being disabled will be completed after the disabling is complete.

Enable protection is denoted by the "Enable-Protected" property in the register description.

Before the RTC is enabled, it must be configured, as outlined by the following steps:

1. RTC operation mode must be selected by writing the Operating Mode bit group in the Control register (CTRL.MODE)
2. Clock representation must be selected by writing the Clock Representation bit in the Control register (CTRL.CLKREP)
3. Prescaler value must be selected by writing the Prescaler bit group in the Control register (CTRL.PRESCALER)

The RTC prescaler divides the source clock for the RTC counter.
Note: In Clock/Calendar mode, the prescaler must be configured to provide a 1 Hz clock to the counter for correct operation.

The frequency of the RTC clock (CLK_RTC_CNT) is given by the following formula:

$$f_{\text{CLK_RTC_CNT}} = \frac{f_{\text{GCLK_RTC}}}{2^{\text{PRESCALER}}}$$

The frequency of the generic clock, GCLK_RTC, is given by f_{GCLK_RTC}, and $f_{CLK_RTC_CNT}$ is the frequency of the internal prescaled RTC clock, CLK_RTC_CNT.

16.6.2.2. Enabling, Disabling and Resetting

The RTC is enabled by setting the Enable bit in the Control register (CTRL.ENABLE=1). The RTC is disabled by writing CTRL.ENABLE=0.

The RTC is reset by setting the Software Reset bit in the Control register (CTRL.SWRST=1). All registers in the RTC, except DEBUG, will be reset to their initial state, and the RTC will be disabled. The RTC must be disabled before resetting it.

16.6.3. Operating Modes

The RTC counter supports three RTC Operating modes: 32-bit Counter, 16-bit Counter and Clock/Calendar. The Operating mode is selected by writing to the Operating Mode bit group in the Control register (CTRL.MODE).

16.6.3.1. 32-Bit Counter (Mode 0)

When the RTC Operating Mode bits in the Control register are zero (CTRL.MODE=00), the counter operates in 32-bit Counter mode. The block diagram of this mode is shown in Figure 16-1. When the RTC is enabled, the counter will increment on every 0-to-1 transition of CLK_RTC_CNT. The counter will increment until it reaches the top value of 0xFFFFFFFF, and then wrap to 0x00000000. This sets the Overflow Interrupt flag in the Interrupt Flag Status and Clear register (INTFLAG.OVF).

The RTC counter value can be read from or written to the Counter Value register (COUNT) in 32-bit format.

The counter value is continuously compared with the 32-bit Compare register (COMP). When a compare match occurs, the Compare Interrupt flag in the Interrupt Flag Status and Clear register (INTFLAG.CMP) is set on the next 0-to-1 transition of CLK_RTC_CNT.

If the Clear on Match bit in the Control register (CTRL.MATCHCLR) is '1', the counter is cleared on the next counter cycle when a compare match with COMP occurs. This allows the RTC to generate

© 2025 Microchip Technology Inc. and its subsidiaries

periodic interrupts or events with longer periods than are possible with the prescaler events. Note that when CTRL.MATCHCLR is '1', INTFLAG.CMP and INTFLAG.OVF will both be set simultaneously on a compare match with COMP.

16.6.3.2. 16-Bit Counter (Mode 1)

When the RTC Operating Mode bits in the Control register (CTRL.MODE) are '1', the counter operates in 16-bit Counter mode as shown in Figure 16-2. When the RTC is enabled, the counter will increment on every 0-to-1 transition of CLK_RTC_CNT. In 16-bit Counter mode, the 16-bit Period register (PER) holds the maximum value of the counter. The counter will increment until it reaches the PER value, and then wrap to 0x0000. This sets the Overflow Interrupt flag in the Interrupt Flag Status and Clear register (INTFLAG.OVF).

The RTC counter value can be read from or written to the Counter Value register (COUNT) in 16-bit format.

The counter value is continuously compared with the 16-bit Compare registers (COMPn, n=0–). When a compare match occurs, the Compare n Interrupt flag in the Interrupt Flag Status and Clear register (INTFLAG.CMPn, n=0–) is set on the next 0-to-1 transition of CLK_RTC_CNT.

16.6.3.3. Clock/Calendar (Mode 2)

When CTRL.MODE is two, the counter operates in Clock/Calendar mode, as shown in Figure 16-3. When the RTC is enabled, the counter will increment on every 0-to-1 transition of CLK_RTC_CNT. The selected clock source and RTC prescaler must be configured to provide a 1 Hz clock to the counter for correct operation in this mode.

The time and date can be read from or written to the Clock Value register (CLOCK) in a 32-bit time/date format. Time is represented as:

- Seconds
- Minutes
- Hours

Hours can be represented in either 12- or 24-hour format, selected by the Clock Representation bit in the Control register (CTRL.CLKREP). This bit can be changed only while the RTC is disabled.

Date is represented as:

- Day as the numeric day of the month (starting at 1)
- Month as the numeric month of the year (1 = January, 2 = February, etc.)
- Year as a value counting the offset from a reference value that must be defined in software

The date is automatically adjusted for leap years, assuming every year divisible by 4 is a leap year. Therefore, the reference value must be a leap year (e.g., 2000). The RTC will increment until it reaches the top value of 23:59:59 December 31st of year 63, and then wrap to 00:00:00 January 1st of year 0. This will set the Overflow Interrupt flag in the Interrupt Flag Status and Clear registers (INTFLAG.OVF).

The clock value is continuously compared with the 32-bit Alarm register (ALARM). When an alarm match occurs, the Alarm Interrupt flag in the Interrupt Flag Status and Clear registers (INTFLAG.ALARMn0) is set on the next 0-to-1 transition of CLK_RTC_CNT. E.g. For a 1 Hz clock counter, it means the Alarm 0 Interrupt flag is set with a delay of 1s after the occurrence of alarm match. A valid alarm match depends on the setting of the Alarm Mask Selection bits in the Alarm

A valid alarm match depends on the setting of the Alarm Mask Selection bits in the Alarm Mask register (MASK.SEL). These bits determine which time/date fields of the clock and alarm values are valid for comparison and which are ignored.

If the Clear on Match bit in the Control register (CTRL.MATCHCLR) is one, the counter is cleared on the next counter cycle when an alarm match with ALARM occurs. This allows the RTC to generate periodic interrupts or events with longer periods than are possible with the prescaler events (see

© 2025 Microchip Technology Inc. and its subsidiaries

Periodic Events). Note that when CTRL.MATCHCLR is '1', INTFLAG.ALARM0 and INTFLAG.OVF will both be set simultaneously on an alarm match with ALARM.

16.6.4. DMA Operation

Not applicable.

16.6.5. Interrupts

The RTC has the following interrupt sources that are asynchronous interrupts and can wake-up the device from any Sleep mode.:

- Overflow (INTFLAG.OVF): Indicates that the counter has reached its top value and wrapped to zero.
- Compare n (INTFLAG.CMPn): Indicates a match between the counter value and the Compare register.
- Alarm n (INTFLAG.ALARMn): Indicates a match between the clock value and the Alarm register.
- Synchronization Ready (INTFLAG.SYNCRDY): Indicates an operation requires synchronization.

Each interrupt source has an Interrupt flag associated with it. The Interrupt flag in the Interrupt Flag Status and Clear (INTFLAG) register is set when the Interrupt condition occurs. Each interrupt can be individually enabled by setting the corresponding bit in the Interrupt Enable Set register (INTENSET=1), and disabled by setting the corresponding bit in the Interrupt Enable Clear register (INTENCLR=1). An interrupt request is generated when the Interrupt flag is raised and the corresponding interrupt is enabled. The interrupt request remains active until either the Interrupt flag is cleared, the interrupt is disabled or the RTC is reset. See the description of the INTFLAG registers for details on how to clear Interrupt flags. All interrupt requests from the peripheral are ORed together on system level to generate one combined interrupt request to the NVIC. Refer to the Nested Vector Interrupt Controller for details. The user must read the INTFLAG register to determine which Interrupt condition is present.

Note: Interrupts must be globally enabled for interrupt requests to be generated. Refer to the Nested Vector Interrupt Controller for details.

16.6.6. Events

The RTC can generate the following output events, which are generated in the same way as the corresponding interrupts:

- Overflow (OVF): Indicates that the counter has reached its top value and wrapped to zero.
- Period n (PERn): The corresponding bit in the prescaler has toggled. Refer to Periodic Events for details.
- Compare n (CMPn): Indicates a match between the counter value and the Compare register.
- Alarm n (ALARMn): Indicates a match between the clock value and the alarm register.

Setting the Event Output bit in the Event Control Register (EVCTRL.xxxEO=1) enables the corresponding output event. Writing a zero to this bit disables the corresponding output event. Refer to the *EVSYS - Event System* for details on configuring the event system.

16.6.7. Sleep Mode Operation

The RTC will continue to operate in any Sleep mode where the source clock is active. The RTC *interrupts* can be used to wake-up the device from a Sleep mode. RTC *events* can trigger other operations in the system without exiting the Sleep mode.

An interrupt request will be generated after the wake-up if the interrupt controller is configured accordingly. Otherwise the CPU will wake-up directly, without triggering any interrupt. In this case, the CPU will continue executing right from the first instruction that followed the entry into sleep.

© 2025 Microchip Technology Inc. and its subsidiaries

The periodic events can also wake-up the CPU through the interrupt function of the Event System. In this case, the event must be enabled and connected to an event channel with its interrupt enabled. See *Event System* for more information.

16.6.8. Synchronization

Due to asynchronicity between the main clock domain and the peripheral clock domains, some registers need to be synchronized when written or read.

When executing an operation that requires synchronization, the Synchronization Busy bit in the Status register (STATUS.SYNCBUSY) will be set immediately, and cleared when synchronization is complete. The Synchronization Ready interrupt can be used to signal when synchronization is complete. This can be accessed via the Synchronization Ready Interrupt Flag in the Interrupt Flag Status and Clear register (INTFLAG.SYNCRDY). If an operation that requires synchronization is executed while STATUS.SYNCBUSY is one, the bus will be stalled. All operations will complete successfully, but the CPU will be stalled and interrupts will be pending as long as the bus is stalled.

The following bits are synchronized when written:

- Software Reset bit in the Control register (CTRL.SWRST)
- Enable bit in the Control register (CTRL.ENABLE)

The following registers are synchronized when written:

- Counter Value register (COUNT)
- Clock Value register (CLOCK)
- Counter Period register (PER)
- Compare n Value registers (COMPn)
- Alarm n Value registers (ALARMn)
- Frequency Correction register (FREQCORR)
- Alarm n Mask register (MASKn)

Required write synchronization is denoted by the "Write-Synchronized" property in the register description.

The following registers are synchronized when read:

- The Counter Value register (COUNT)
- The Clock Value register (CLOCK)

Required read synchronization is denoted by the "Read-Synchronized" property in the register description.

16.6.9. Additional Features

16.6.9.1. Periodic Events

The RTC prescaler can generate events at periodic intervals, allowing flexible system tick creation. Any of the upper eight bits of the prescaler (bits 2 to 9) can be the source of an event. When one of the eight Periodic Event Output bits in the Event Control register (EVCTRL.PEREO[n=0..7]) is '1', an event is generated on the 0-to-1 transition of the related bit in the prescaler, resulting in a periodic event frequency of:

$$f_{PERIODIC} = \frac{f_{\mathrm{GCLK_RTC}}}{2^{n+3}}$$

f_{GCLK_RTC} is the frequency of the internal prescaler clock, GCLK_RTC, and n is the position of the EVCTRL.PEREOn bit. For example, PER0 will generate an event every eight CLK_RTC_OSC cycles, PER1 every 16 cycles, etc. This is shown in the figure below. Periodic events are independent of

© 2025 Microchip Technology Inc. and its subsidiaries

the prescaler setting used by the RTC counter, except if CTRL.PRESCALER is zero. Then, no periodic events will be generated.

Figure 16-4. Example Periodic Events

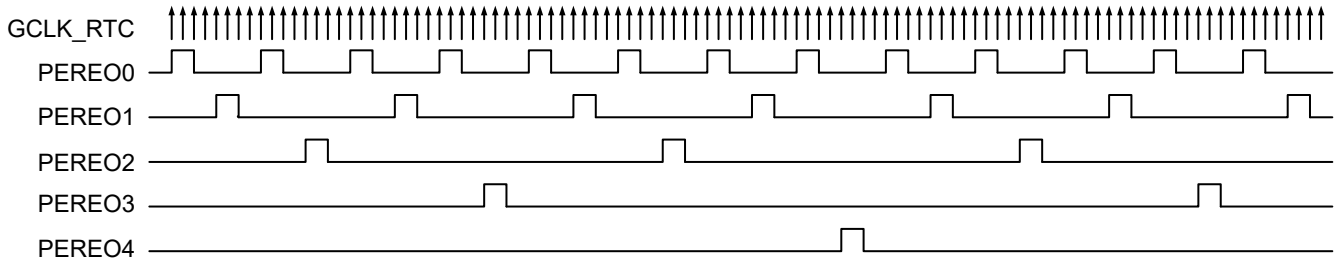

16.6.9.2. Frequency Correction

The RTC Frequency Correction module employs periodic counter corrections to compensate for a too-slow or too-fast oscillator. Frequency correction requires that CTRL.PRESCALER is greater than 1.

The digital correction circuit adds or subtracts cycles from the RTC prescaler to adjust the frequency in approximately 1 ppm steps. Digital correction is achieved by adding or skipping a single count in the prescaler once every 4096 GCLK_RTC_OSC cycles. The Value bit group in the Frequency Correction register (FREQCORR.VALUE) determines the number of times the adjustment is applied over 240 of these periods. The resulting correction is as follows:

$$\textit{Correction in ppm} = (\textit{FREQCORR.VALUE} / 4096 * 240) * 10^{6ppm}$$

This results in a resolution of 1.017 PPM.

The Sign bit in the Frequency Correction register (FREQCORR.SIGN) determines the direction of the correction. A positive value will add counts and increase the period (reducing the frequency), and a negative value will reduce counts per period (speeding up the frequency). Digital correction also affects the generation of the periodic events from the prescaler. When the correction is applied at the end of the correction cycle period, the interval between the previous periodic event and the next occurrence may also be shortened or lengthened depending on the correction value.

© 2025 Microchip Technology Inc. and its subsidiaries

16.7. Register Summary Mode 0 Register Summary

Offset	Name	Bit Pos.	7	6	5	4	3	2	1	0
0x00	CTRL	7:0	MATCHCLR				MODE[1:0]		ENABLE	SWRST
		15:8					PRESCALER[3:0]			
0x02	READREQ	7:0			ADDR[5:0]					
		15:8	RREQ	RCONT						
0x04	EVCTRL	7:0	PEREOx	PEREOx	PEREOx	PEREOx	PEREOx	PEREOx	PEREOx	PEREOx
		15:8	OVFEO							CMPEO0
0x06	INTENCLR	7:0	OVF	SYNCRDY						CMP0
0x07	INTENSET	7:0	OVF	SYNCRDY						CMP0
0x08	INTFLAG	7:0	OVF	SYNCRDY						CMP0
0x09	Reserved									
0x0A	STATUS	7:0	SYNCBUSY							
0x0B	DBGCTRL	7:0								DBGRUN
0x0C	FREQCORR	7:0	SIGN	VALUE[6:0]						
0x0D ... 0x0F	Reserved									
0x10	COUNT	7:0	COUNT[7:0]							
		15:8	COUNT[15:8]							
		23:16	COUNT[23:16]							
		31:24	COUNT[31:24]							
0x14 ... 0x17	Reserved									
0x18	COMP	7:0	COMP[7:0]							
		15:8	COMP[15:8]							
		23:16	COMP[23:16]							
		31:24	COMP[31:24]							

© 2025 Microchip Technology Inc. and its subsidiaries

16.7.1. Control - MODE0

Name: CTRL
Offset: 0x00
Reset: 0x0000
Property: Enable-Protected, Write-Protected, Write-Synchronized

Table 16-2. Register Bit Attribute Legend

Symbol	Description	Symbol	Description	Symbol	Description
R	Readable bit	**HC**	Cleared by Hardware	(Grey cell)	Unimplemented
W	Writable bit	**HS**	Set by Hardware	**X**	Bit is unknown at Reset
K	Write to clear	**S**	Software settable bit	—	—

Bit	15	14	13	12	11	10	9	8
					PRESCALER[3:0]			
Access					R/W	R/W	R/W	R/W
Reset					0	0	0	0

Bit	7	6	5	4	3	2	1	0
	MATCHCLR				MODE[1:0]		ENABLE	SWRST
Access	R/W				R/W	R/W	R/W	W
Reset	0				0	0	0	0

Bits 11:8 – PRESCALER[3:0] Prescaler
These bits define the prescaling factor for the RTC clock source (GCLK_RTC) to generate the counter clock (CLK_RTC_CNT).
These bits are not synchronized.

PRESCALER[3:0]	Name	Description
0x0	DIV1	CLK_RTC_CNT = GCLK_RTC/1
0x1	DIV2	CLK_RTC_CNT = GCLK_RTC/2
0x2	DIV4	CLK_RTC_CNT = GCLK_RTC/4
0x3	DIV8	CLK_RTC_CNT = GCLK_RTC/8
0x4	DIV16	CLK_RTC_CNT = GCLK_RTC/16
0x5	DIV32	CLK_RTC_CNT = GCLK_RTC/32
0x6	DIV64	CLK_RTC_CNT = GCLK_RTC/64
0x7	DIV128	CLK_RTC_CNT = GCLK_RTC/128
0x8	DIV256	CLK_RTC_CNT = GCLK_RTC/256
0x9	DIV512	CLK_RTC_CNT = GCLK_RTC/512
0xA	DIV1024	CLK_RTC_CNT = GCLK_RTC/1024
0xB-0xF		Reserved

Bit 7 – MATCHCLR Clear on Match
This bit is valid only in Mode 0 and Mode 2.
This bit is not synchronized.

Value	Description
0	The counter is not cleared on a Compare/Alarm 0 match
1	The counter is cleared on a Compare/Alarm 0 match

Bits 3:2 – MODE[1:0] Operating Mode
These bits define the operating mode of the RTC.
These bits are not synchronized.

© 2025 Microchip Technology Inc. and its subsidiaries

MODE[1:0]	Name	Description
0x0	COUNT32	Mode 0: 32-bit Counter
0x1	COUNT16	Mode 1: 16-bit Counter
0x2	CLOCK	Mode 2: Clock/Calendar
0x3		Reserved

Bit 1 – ENABLE Enable

Due to synchronization, there is delay from writing CTRL.ENABLE until the peripheral is enabled/disabled. The value written to CTRL.ENABLE will read back immediately, and the Synchronization Busy bit in the Status register (STATUS.SYNCBUSY) will be set. STATUS.SYNCBUSY will be cleared when the operation is complete.
This bit is not enable-protected.

Value	Description
0	The peripheral is disabled or being disabled
1	The peripheral is enabled or being enabled

Bit 0 – SWRST Software Reset

Writing a zero to this bit has no effect.
Writing a one to this bit resets all registers in the RTC, except DBGCTRL, to their initial state, and the RTC will be disabled.
Writing a one to CTRL.SWRST will always take precedence, meaning that all other writes in the same write operation will be discarded.
Due to synchronization, there is a delay from writing CTRL.SWRST until the Reset is complete. CTRL.SWRST and STATUS.SYNCBUSY will both be cleared when the Reset is complete.
This bit is not enable-protected.

Value	Description
0	There is no Reset operation ongoing
1	The Reset operation is ongoing

© 2025 Microchip Technology Inc. and its subsidiaries

16.7.2. Read Request

Name: READREQ
Offset: 0x02
Reset: 0x0010
Property: -

Table 16-3. Register Bit Attribute Legend

Symbol	Description	Symbol	Description	Symbol	Description
R	Readable bit	**HC**	Cleared by Hardware	(Grey cell)	Unimplemented
W	Writable bit	**HS**	Set by Hardware	**X**	Bit is unknown at Reset
K	Write to clear	**S**	Software settable bit	—	—

Bit	15	14	13	12	11	10	9	8
	RREQ	RCONT						
Access	W	R/W						
Reset	0	0						

Bit	7	6	5	4	3	2	1	0
			ADDR[5:0]					
Access			R	R	R	R	R	R
Reset			0	1	0	0	0	0

Bit 15 – RREQ Read Request
Writing a zero to this bit has no effect.
Writing a one to this bit requests synchronization of the register pointed to by the Address bit group (READREQ.ADDR) and sets the Synchronization Busy bit in the Status register (STATUS.SYNCBUSY).

Bit 14 – RCONT Read Continuously
Writing a zero to this bit disables continuous synchronization.
Writing a one to this bit enables continuous synchronization of the register pointed to by READREQ.ADDR. The register value will be synchronized automatically every time the register is updated. READREQ.RCONT prevents READREQ.RREQ from clearing automatically. For the continuous read mode, RREQ bit is required to be set once the RCONT bit is set.
This bit is cleared when an RTC register is written.
Note: Once the continuous synchronization is enabled, the first write in the COUNT/CLOCK register will be stalled for a maximum of 6 APB + 6 RTC clock cycles (the time for the on-going read synchronization to complete).

Bits 5:0 – ADDR[5:0] Address
These bits select the offset of the register that needs read synchronization. In the RTC only COUNT and CLOCK, which share the same address, are available for read synchronization. Therefore, ADDR is a read-only constant of 0x10.

© 2025 Microchip Technology Inc. and its subsidiaries

16.7.3. Event Control - MODE0

Name: EVCTRL
Offset: 0x04
Reset: 0x0000
Property: Enable-Protected, Write-Protected

Table 16-4. Register Bit Attribute Legend

Symbol	Description	Symbol	Description	Symbol	Description
R	Readable bit	**HC**	Cleared by Hardware	(Grey cell)	Unimplemented
W	Writable bit	**HS**	Set by Hardware	**X**	Bit is unknown at Reset
K	Write to clear	**S**	Software settable bit	—	—

Bit	15	14	13	12	11	10	9	8
	OVFEO							CMPEO0
Access	R/W							R/W
Reset	0							0

Bit	7	6	5	4	3	2	1	0
	PEREOx	PEREOx	PEREOx	PEREOx	PEREOx	PEREOx	PEREOx	PEREOx
Access	R/W	R/W	R/W	R/W	R/W	R/W	R/W	R/W
Reset	0	0	0	0	0	0	0	0

Bit 15 – OVFEO Overflow Event Output Enable

Value	Description
0	Overflow event is disabled and will not be generated
1	Overflow event is enabled and will be generated for every overflow

Bit 8 – CMPEO0 Compare 0 Event Output Enable

Value	Description
0	Compare 0 event is disabled and will not be generated
1	Compare 0 event is enabled and will be generated for every compare match

Bits 7,6,5,4,3,2,1,0 – PEREOx Periodic Interval x Event Output Enable [x=7:0]

Value	Description
0	Periodic Interval x event is disabled and will not be generated
1	Periodic Interval x event is enabled and will be generated

© 2025 Microchip Technology Inc. and its subsidiaries

16.7.4. Interrupt Enable Clear - MODE0

Name: INTENCLR
Offset: 0x06
Reset: 0x00
Property: Write-Protected

Table 16-5. Register Bit Attribute Legend

Symbol	Description	Symbol	Description	Symbol	Description
R	Readable bit	**HC**	Cleared by Hardware	(Grey cell)	Unimplemented
W	Writable bit	**HS**	Set by Hardware	**X**	Bit is unknown at Reset
K	Write to clear	**S**	Software settable bit	—	—

Bit	7	6	5	4	3	2	1	0
	OVF	SYNCRDY						CMP0
Access	R/W	R/W						R/W
Reset	0	0						0

Bit 7 – OVF Overflow Interrupt Enable
Writing a zero to this bit has no effect.
Writing a one to this bit will clear the Overflow Interrupt Enable bit and disable the corresponding interrupt.

Value	Description
0	The Overflow interrupt is disabled
1	The Overflow interrupt is enabled, and an interrupt request will be generated when the Overflow Interrupt flag is set

Bit 6 – SYNCRDY Synchronization Ready Interrupt Enable
Writing a zero to this bit has no effect.
Writing a one to this bit will clear the Synchronization Ready Interrupt Enable bit and disable the corresponding interrupt.

Value	Description
0	The Synchronization Ready interrupt is disabled
1	The Synchronization Ready interrupt is enabled, and an interrupt request will be generated when the Synchronization Ready Interrupt flag is set

Bit 0 – CMP0 Compare 0 Interrupt Enable
Writing a zero to this bit has no effect.
Writing a one to this bit will clear the Compare 0 Interrupt Enable bit and disable the corresponding interrupt.

Value	Description
0	The Compare 0 interrupt is disabled
1	The Compare 0 interrupt is enabled, and an interrupt request will be generated when the Compare x Interrupt flag is set

© 2025 Microchip Technology Inc. and its subsidiaries

16.7.5. Interrupt Enable Set - MODE0

Name: INTENSET
Offset: 0x07
Reset: 0x00
Property: Write-Protected

Table 16-6. Register Bit Attribute Legend

Symbol	Description	Symbol	Description	Symbol	Description
R	Readable bit	**HC**	Cleared by Hardware	(Grey cell)	Unimplemented
W	Writable bit	**HS**	Set by Hardware	**X**	Bit is unknown at Reset
K	Write to clear	**S**	Software settable bit	—	—

Bit	7	6	5	4	3	2	1	0
	OVF	SYNCRDY						CMP0
Access	R/W	R/W						R/W
Reset	0	0						0

Bit 7 – OVF Overflow Interrupt Enable
Writing a zero to this bit has no effect.
Writing a one to this bit will set the Overflow Interrupt Enable bit and enable the Overflow interrupt.

Value	Description
0	The Overflow interrupt is disabled
1	The Overflow interrupt is enabled

Bit 6 – SYNCRDY Synchronization Ready Interrupt Enable
Writing a zero to this bit has no effect.
Writing a one to this bit will set the Synchronization Ready Interrupt Enable bit and enable the Synchronization Ready interrupt.

Value	Description
0	The Synchronization Ready interrupt is disabled
1	The Synchronization Ready interrupt is enabled

Bit 0 – CMP0 Compare 0 Interrupt Enable
Writing a zero to this bit has no effect.
Writing a one to this bit will set the Compare 0 Interrupt Enable bit and enable the Compare 0 interrupt.

Value	Description
0	The Compare 0 interrupt is disabled
1	The Compare 0 interrupt is enabled

© 2025 Microchip Technology Inc. and its subsidiaries

16.7.6. Interrupt Flag Status and Clear - MODE0

Name: INTFLAG
Offset: 0x08
Reset: 0x00
Property: -

Table 16-7. Register Bit Attribute Legend

Symbol	Description	Symbol	Description	Symbol	Description
R	Readable bit	**HC**	Cleared by Hardware	(Grey cell)	Unimplemented
W	Writable bit	**HS**	Set by Hardware	**X**	Bit is unknown at Reset
K	Write to clear	**S**	Software settable bit	—	—

Bit	7	6	5	4	3	2	1	0
	OVF	SYNCRDY						CMP0
Access	R/W	R/W						R/W
Reset	0	0						0

Bit 7 – OVF Overflow
This flag is cleared by writing a one to the flag.
This flag is set on the next CLK_RTC_CNT cycle after an overflow condition occurs, and an interrupt request will be generated if INTENCLR/SET.OVF is one.
Writing a zero to this bit has no effect.
Writing a one to this bit clears the Overflow Interrupt flag.

Bit 6 – SYNCRDY Synchronization Ready
This flag is cleared by writing a one to the flag.
This flag is set on a 1-to-0 transition of the Synchronization Busy bit in the Status register (STATUS.SYNCBUSY), except when caused by enable or Software Reset, and an interrupt request will be generated if INTENCLR/SET.SYNCRDY is one.
Writing a zero to this bit has no effect.
Writing a one to this bit clears the Synchronization Ready Interrupt flag.

Bit 0 – CMP0 Compare 0
This flag is cleared by writing a one to the flag.
This flag is set on the next CLK_RTC_CNT cycle after a match with the Compare condition, and an interrupt request will be generated if INTENCLR/SET.CMP0 is one.
Writing a zero to this bit has no effect.
Writing a one to this bit clears the Compare 0 Interrupt flag.

© 2025 Microchip Technology Inc. and its subsidiaries

16.7.7. Status

Name: STATUS
Offset: 0x0A
Reset: 0x00
Property: -

Table 16-8. Register Bit Attribute Legend

Symbol	Description	Symbol	Description	Symbol	Description
R	Readable bit	**HC**	Cleared by Hardware	(Grey cell)	Unimplemented
W	Writable bit	**HS**	Set by Hardware	**X**	Bit is unknown at Reset
K	Write to clear	**S**	Software settable bit	—	—

Bit	7	6	5	4	3	2	1	0
	SYNCBUSY							
Access	R							
Reset	0							

Bit 7 – SYNCBUSY Synchronization Busy
This bit is cleared when the synchronization of registers between the clock domains is complete.
This bit is set when the synchronization of registers between clock domains is started.

© 2025 Microchip Technology Inc. and its subsidiaries

16.7.8. Debug Control

Name: DBGCTRL
Offset: 0x0B
Reset: 0x00
Property: -

Table 16-9. Register Bit Attribute Legend

Symbol	Description	Symbol	Description	Symbol	Description
R	Readable bit	**HC**	Cleared by Hardware	(Grey cell)	Unimplemented
W	Writable bit	**HS**	Set by Hardware	**X**	Bit is unknown at Reset
K	Write to clear	**S**	Software settable bit	—	—

Bit	7	6	5	4	3	2	1	0
								DBGRUN
Access								R/W
Reset								0

Bit 0 – DBGRUN Run During Debug
This bit is not reset by a Software Reset.
Writing a zero to this bit causes the RTC to halt during Debug mode.
Writing a one to this bit allows the RTC to continue normal operation during Debug mode.

© 2025 Microchip Technology Inc. and its subsidiaries

16.7.9. Frequency Correction

Name: FREQCORR
Offset: 0x0C
Reset: 0x00
Property: Write-Protected, Write-Synchronized

Table 16-10. Register Bit Attribute Legend

Symbol	Description	Symbol	Description	Symbol	Description
R	Readable bit	**HC**	Cleared by Hardware	(Grey cell)	Unimplemented
W	Writable bit	**HS**	Set by Hardware	**X**	Bit is unknown at Reset
K	Write to clear	**S**	Software settable bit	—	—

Bit	7	6	5	4	3	2	1	0
	SIGN	VALUE[6:0]						
Access	R/W	R/W	R/W	R/W	R/W	R/W	R/W	R/W
Reset	0	0	0	0	0	0	0	0

Bit 7 – SIGN Correction Sign

Value	Description
0	The correction value is positive (i.e., frequency will be decreased)
1	The correction value is negative (i.e., frequency will be increased)

Bits 6:0 – VALUE[6:0] Correction Value
These bits define the amount of correction applied to the RTC prescaler.
1–127: The RTC frequency is adjusted according to the value.

Value	Description
0	Correction is disabled and the RTC frequency is unchanged

© 2025 Microchip Technology Inc. and its subsidiaries

16.7.10. Counter Value - MODE0

Name: COUNT
Offset: 0x10
Reset: 0x00000000
Property: Read-Synchronized, Write-Protected, Write-Synchronized

Table 16-11. Register Bit Attribute Legend

Symbol	Description	Symbol	Description	Symbol	Description
R	Readable bit	**HC**	Cleared by Hardware	(Grey cell)	Unimplemented
W	Writable bit	**HS**	Set by Hardware	**X**	Bit is unknown at Reset
K	Write to clear	**S**	Software settable bit	—	—

Bit	31	30	29	28	27	26	25	24
	COUNT[31:24]							
Access	R/W	R/W	R/W	R/W	R/W	R/W	R/W	R/W
Reset	0	0	0	0	0	0	0	0

Bit	23	22	21	20	19	18	17	16
	COUNT[23:16]							
Access	R/W	R/W	R/W	R/W	R/W	R/W	R/W	R/W
Reset	0	0	0	0	0	0	0	0

Bit	15	14	13	12	11	10	9	8
	COUNT[15:8]							
Access	R/W	R/W	R/W	R/W	R/W	R/W	R/W	R/W
Reset	0	0	0	0	0	0	0	0

Bit	7	6	5	4	3	2	1	0
	COUNT[7:0]							
Access	R/W	R/W	R/W	R/W	R/W	R/W	R/W	R/W
Reset	0	0	0	0	0	0	0	0

Bits 31:0 – COUNT[31:0] Counter Value
These bits define the value of the 32-bit RTC counter.

© 2025 Microchip Technology Inc. and its subsidiaries

16.7.11. Compare n Value - MODE0

Name: COMP
Offset: 0x18
Reset: 0x00000000
Property: Write-Protected, Write-Synchronized

Table 16-12. Register Bit Attribute Legend

Symbol	Description	Symbol	Description	Symbol	Description
R	Readable bit	**HC**	Cleared by Hardware	(Grey cell)	Unimplemented
W	Writable bit	**HS**	Set by Hardware	**X**	Bit is unknown at Reset
K	Write to clear	**S**	Software settable bit	—	—

Bit	31	30	29	28	27	26	25	24
	COMP[31:24]							
Access	R/W	R/W	R/W	R/W	R/W	R/W	R/W	R/W
Reset	0	0	0	0	0	0	0	0

Bit	23	22	21	20	19	18	17	16
	COMP[23:16]							
Access	R/W	R/W	R/W	R/W	R/W	R/W	R/W	R/W
Reset	0	0	0	0	0	0	0	0

Bit	15	14	13	12	11	10	9	8
	COMP[15:8]							
Access	R/W	R/W	R/W	R/W	R/W	R/W	R/W	R/W
Reset	0	0	0	0	0	0	0	0

Bit	7	6	5	4	3	2	1	0
	COMP[7:0]							
Access	R/W	R/W	R/W	R/W	R/W	R/W	R/W	R/W
Reset	0	0	0	0	0	0	0	0

Bits 31:0 – COMP[31:0] Compare Value

The 32-bit value of COMPn is continuously compared with the 32-bit COUNT value. When a match occurs, the Compare n interrupt flag in the Interrupt Flag Status and Clear register (INTFLAG.CMPn) is set on the next counter cycle, and the counter value is cleared if CTRL.MATCHCLR is one.

© 2025 Microchip Technology Inc. and its subsidiaries

16.8. Register Summary Mode 1

Offset	Name	Bit Pos.	7	6	5	4	3	2	1	0
0x00	CTRL	7:0					MODE[1:0]		ENABLE	SWRST
		15:8					PRESCALER[3:0]			
0x02 ... 0x03	Reserved									
0x04	EVCTRL	7:0	PEREOx	PEREOx	PEREOx	PEREOx	PEREOx	PEREOx	PEREOx	PEREOx
		15:8	OVFEO						CMPEOx	CMPEOx
0x06	INTENCLR	7:0	OVF	SYNCRDY					CMPx	CMPx
0x07	INTENSET	7:0	OVF	SYNCRDY					CMPx	CMPx
0x08	INTFLAG	7:0	OVF	SYNCRDY					CMPx	CMPx
0x09 ... 0x0F	Reserved									
0x10	COUNT	7:0	COUNT[7:0]							
		15:8	COUNT[15:8]							
0x12 ... 0x13	Reserved									
0x14	PER	7:0	PER[7:0]							
		15:8	PER[15:8]							
0x16 ... 0x17	Reserved									
0x18	COMP0	7:0	COMP[7:0]							
		15:8	COMP[15:8]							
0x1A	COMP1	7:0	COMP[7:0]							
		15:8	COMP[15:8]							

© 2025 Microchip Technology Inc. and its subsidiaries

16.8.1. Control - MODE1

Name: CTRL
Offset: 0x00
Reset: 0x0000
Property: Enable-Protected, Write-Protected, Write-Synchronized

Table 16-13. Register Bit Attribute Legend

Symbol	Description	Symbol	Description	Symbol	Description
R	Readable bit	**HC**	Cleared by Hardware	(Grey cell)	Unimplemented
W	Writable bit	**HS**	Set by Hardware	**X**	Bit is unknown at Reset
K	Write to clear	**S**	Software settable bit	—	—

Bit	15	14	13	12	11	10	9	8
					PRESCALER[3:0]			
Access					R/W	R/W	R/W	R/W
Reset					0	0	0	0

Bit	7	6	5	4	3	2	1	0
					MODE[1:0]		ENABLE	SWRST
Access					R/W	R/W	R/W	W
Reset					0	0	0	0

Bits 11:8 – PRESCALER[3:0] Prescaler
These bits define the prescaling factor for the RTC clock source (GCLK_RTC) to generate the counter clock (CLK_RTC_CNT).
These bits are not synchronized.

PRESCALER[3:0]	Name	Description
0x0	DIV1	CLK_RTC_CNT = GCLK_RTC/1
0x1	DIV2	CLK_RTC_CNT = GCLK_RTC/2
0x2	DIV4	CLK_RTC_CNT = GCLK_RTC/4
0x3	DIV8	CLK_RTC_CNT = GCLK_RTC/8
0x4	DIV16	CLK_RTC_CNT = GCLK_RTC/16
0x5	DIV32	CLK_RTC_CNT = GCLK_RTC/32
0x6	DIV64	CLK_RTC_CNT = GCLK_RTC/64
0x7	DIV128	CLK_RTC_CNT = GCLK_RTC/128
0x8	DIV256	CLK_RTC_CNT = GCLK_RTC/256
0x9	DIV512	CLK_RTC_CNT = GCLK_RTC/512
0xA	DIV1024	CLK_RTC_CNT = GCLK_RTC/1024
0xB-0xF		Reserved

Bits 3:2 – MODE[1:0] Operating Mode
These bits define the Operating mode of the RTC.
These bits are not synchronized.

MODE[1:0]	Name	Description
0x0	COUNT32	Mode 0: 32-bit Counter
0x1	COUNT16	Mode 1: 16-bit Counter
0x2	CLOCK	Mode 2: Clock/Calendar
0x3		Reserved

© 2025 Microchip Technology Inc. and its subsidiaries

Bit 1 – ENABLE Enable

Due to synchronization, there is delay from writing CTRL.ENABLE until the peripheral is enabled/disabled. The value written to CTRL.ENABLE will read back immediately, and the Synchronization Busy bit in the Status register (STATUS.SYNCBUSY) will be set. STATUS.SYNCBUSY will be cleared when the operation is complete.
This bit is not enable-protected.

Value	Description
0	The peripheral is disabled or being disabled
1	The peripheral is enabled or being enabled

Bit 0 – SWRST Software Reset

Writing a zero to this bit has no effect.
Writing a one to this bit resets all registers in the RTC, except DBGCTRL, to their initial state, and the RTC will be disabled.
Writing a one to CTRL.SWRST will always take precedence, meaning that all other writes in the same write operation will be discarded.
Due to synchronization, there is a delay from writing CTRL.SWRST until the Reset is complete. CTRL.SWRST and STATUS.SYNCBUSY will both be cleared when the Reset is complete.
This bit is not enable-protected.

Value	Description
0	There is no Reset operation ongoing
1	The Reset operation is ongoing

© 2025 Microchip Technology Inc. and its subsidiaries

16.8.2. Event Control - MODE1

Name: EVCTRL
Offset: 0x04
Reset: 0x0000
Property: Enable-Protected, Write-Protected

Table 16-14. Register Bit Attribute Legend

Symbol	Description	Symbol	Description	Symbol	Description
R	Readable bit	**HC**	Cleared by Hardware	(Grey cell)	Unimplemented
W	Writable bit	**HS**	Set by Hardware	**X**	Bit is unknown at Reset
K	Write to clear	**S**	Software settable bit	—	—

Bit	15	14	13	12	11	10	9	8
	OVFEO						CMPEOx	CMPEOx
Access	R/W						R/W	R/W
Reset	0						0	0

Bit	7	6	5	4	3	2	1	0
	PEREOx	PEREOx	PEREOx	PEREOx	PEREOx	PEREOx	PEREOx	PEREOx
Access	R/W	R/W	R/W	R/W	R/W	R/W	R/W	R/W
Reset	0	0	0	0	0	0	0	0

Bit 15 – OVFEO Overflow Event Output Enable

Value	Description
0	Overflow event is disabled and will not be generated
1	Overflow event is enabled and will be generated for every overflow

Bits 9,8 – CMPEOx Compare x Event Output Enable [x=1:0]

Value	Description
0	Compare x event is disabled and will not be generated
1	Compare x event is enabled and will be generated for every compare match

Bits 7,6,5,4,3,2,1,0 – PEREOx Periodic Interval x Event Output Enable [x=7:0]

Value	Description
0	Periodic Interval x event is disabled and will not be generated
1	Periodic Interval x event is enabled and will be generated

© 2025 Microchip Technology Inc. and its subsidiaries

16.8.3. Interrupt Enable Clear - MODE1

Name: INTENCLR
Offset: 0x06
Reset: 0x00
Property: Write-Protected

Table 16-15. Register Bit Attribute Legend

Symbol	Description	Symbol	Description	Symbol	Description
R	Readable bit	**HC**	Cleared by Hardware	(Grey cell)	Unimplemented
W	Writable bit	**HS**	Set by Hardware	**X**	Bit is unknown at Reset
K	Write to clear	**S**	Software settable bit	—	—

Bit	7	6	5	4	3	2	1	0
	OVF	SYNCRDY					CMPx	CMPx
Access	R/W	R/W					R/W	R/W
Reset	0	0					0	0

Bit 7 – OVF Overflow Interrupt Enable
Writing a zero to this bit has no effect.
Writing a one to this bit will clear the Overflow Interrupt Enable bit and disable the corresponding interrupt.

Value	Description
0	The Overflow interrupt is disabled
1	The Overflow interrupt is enabled, and an interrupt request will be generated when the Overflow interrupt flag is set

Bit 6 – SYNCRDY Synchronization Ready Interrupt Enable
Writing a zero to this bit has no effect.
Writing a one to this bit will clear the Synchronization Ready Interrupt Enable bit and disable the corresponding interrupt.

Value	Description
0	The Synchronization Ready interrupt is disabled
1	The Synchronization Ready interrupt is enabled, and an interrupt request will be generated when the Synchronization Ready interrupt flag is set

Bits 1,0 – CMPx Compare x Interrupt Enable [x=1:0]
Writing a zero to this bit has no effect.
Writing a one to this bit will clear the Compare x Interrupt Enable bit and disable the corresponding interrupt.

Value	Description
0	The Compare x interrupt is disabled
1	The Compare x interrupt is enabled, and an interrupt request will be generated when the Compare x interrupt flag is set

© 2025 Microchip Technology Inc. and its subsidiaries

16.8.4. Interrupt Enable Set - MODE1

Name: INTENSET
Offset: 0x07
Reset: 0x00
Property: Write-Protected

Table 16-16. Register Bit Attribute Legend

Symbol	Description	Symbol	Description	Symbol	Description
R	Readable bit	**HC**	Cleared by Hardware	(Grey cell)	Unimplemented
W	Writable bit	**HS**	Set by Hardware	**X**	Bit is unknown at Reset
K	Write to clear	**S**	Software settable bit	—	—

Bit	7	6	5	4	3	2	1	0
	OVF	SYNCRDY					CMPx	CMPx
Access	R/W	R/W					R/W	R/W
Reset	0	0					0	0

Bit 7 – OVF Overflow Interrupt Enable
Writing a zero to this bit has no effect.
Writing a one to this bit will set the Overflow interrupt bit and enable the Overflow interrupt.

Value	Description
0	The Overflow interrupt is disabled
1	The Overflow interrupt is enabled

Bit 6 – SYNCRDY Synchronization Ready Interrupt Enable
Writing a zero to this bit has no effect.
Writing a one to this bit will set the Synchronization Ready Interrupt Enable bit and enable the Synchronization Ready interrupt.

Value	Description
0	The Synchronization Ready interrupt is disabled
1	The Synchronization Ready interrupt is enabled

Bits 1,0 – CMPx Compare x Interrupt Enable [x=1:0]
Writing a zero to this bit has no effect.
Writing a one to this bit will set the Compare x Interrupt Enable bit and enable the Compare x interrupt.

Value	Description
0	The Compare x interrupt is disabled
1	The Compare x interrupt is enabled

© 2025 Microchip Technology Inc. and its subsidiaries

16.8.5. Interrupt Flag Status and Clear - MODE1

Name: INTFLAG
Offset: 0x08
Reset: 0x00
Property: -

Table 16-17. Register Bit Attribute Legend

Symbol	Description	Symbol	Description	Symbol	Description
R	Readable bit	**HC**	Cleared by Hardware	(Grey cell)	Unimplemented
W	Writable bit	**HS**	Set by Hardware	**X**	Bit is unknown at Reset
K	Write to clear	**S**	Software settable bit	—	—

Bit	7	6	5	4	3	2	1	0
	OVF	SYNCRDY					CMPx	CMPx
Access	R/W	R/W					R/W	R/W
Reset	0	0					0	0

Bit 7 – OVF Overflow
This flag is cleared by writing a one to the flag.
This flag is set on the next CLK_RTC_CNT cycle after an Overflow condition occurs, and an interrupt request will be generated if INTENCLR/SET.OVF is one.
Writing a zero to this bit has no effect.
Writing a one to this bit clears the Overflow interrupt flag.

Bit 6 – SYNCRDY Synchronization Ready
This flag is cleared by writing a one to the flag.
This flag is set on a 1-to-0 transition of the Synchronization Busy bit in the Status register (STATUS.SYNCBUSY), except when caused by enable or Software Reset, and an interrupt request will be generated if INTENCLR/SET.SYNCRDY is one.
Writing a zero to this bit has no effect.
Writing a one to this bit clears the Synchronization Ready Interrupt flag.

Bits 1,0 – CMPx Compare x [x=1:0]
This flag is cleared by writing a one to the flag.
This flag is set on the next CLK_RTC_CNT cycle after a match with the Compare condition and an interrupt request will be generated if INTENCLR/SET.CMPx is one.
Writing a zero to this bit has no effect.
Writing a one to this bit clears the Compare x Interrupt flag.

© 2025 Microchip Technology Inc. and its subsidiaries

16.8.6. Counter Value - MODE1

Name: COUNT
Offset: 0x10
Reset: 0x0000
Property: Read-Synchronized, Write-Protected, Write-Synchronized

Table 16-18. Register Bit Attribute Legend

Symbol	Description	Symbol	Description	Symbol	Description
R	Readable bit	**HC**	Cleared by Hardware	(Grey cell)	Unimplemented
W	Writable bit	**HS**	Set by Hardware	**X**	Bit is unknown at Reset
K	Write to clear	**S**	Software settable bit	—	—

Bit	15	14	13	12	11	10	9	8
	COUNT[15:8]							
Access	R/W	R/W	R/W	R/W	R/W	R/W	R/W	R/W
Reset	0	0	0	0	0	0	0	0

Bit	7	6	5	4	3	2	1	0
	COUNT[7:0]							
Access	R/W	R/W	R/W	R/W	R/W	R/W	R/W	R/W
Reset	0	0	0	0	0	0	0	0

Bits 15:0 – COUNT[15:0] Counter Value
These bits define the value of the 16-bit RTC counter.

© 2025 Microchip Technology Inc. and its subsidiaries

16.8.7. Counter Period - MODE1

Name: PER
Offset: 0x14
Reset: 0x0000
Property: Write-Protected, Write-Synchronized

Table 16-19. Register Bit Attribute Legend

Symbol	Description	Symbol	Description	Symbol	Description
R	Readable bit	**HC**	Cleared by Hardware	(Grey cell)	Unimplemented
W	Writable bit	**HS**	Set by Hardware	**X**	Bit is unknown at Reset
K	Write to clear	**S**	Software settable bit	—	—

Bit	15	14	13	12	11	10	9	8
	PER[15:8]							
Access	R/W	R/W	R/W	R/W	R/W	R/W	R/W	R/W
Reset	0	0	0	0	0	0	0	0

Bit	7	6	5	4	3	2	1	0
	PER[7:0]							
Access	R/W	R/W	R/W	R/W	R/W	R/W	R/W	R/W
Reset	0	0	0	0	0	0	0	0

Bits 15:0 – PER[15:0] Counter Period
These bits define the value of the 16-bit RTC period.

© 2025 Microchip Technology Inc. and its subsidiaries

16.8.8. Compare n Value - MODE1

Name: COMPn
Offset: 0x18 + n*0x02 [n=0..1]
Reset: 0x0000
Property: Write-Protected, Write-Synchronized

Table 16-20. Register Bit Attribute Legend

Symbol	Description	Symbol	Description	Symbol	Description
R	Readable bit	**HC**	Cleared by Hardware	(Grey cell)	Unimplemented
W	Writable bit	**HS**	Set by Hardware	**X**	Bit is unknown at Reset
K	Write to clear	**S**	Software settable bit	—	—

Bit	15	14	13	12	11	10	9	8
	COMP[15:8]							
Access	R/W	R/W	R/W	R/W	R/W	R/W	R/W	R/W
Reset	0	0	0	0	0	0	0	0

Bit	7	6	5	4	3	2	1	0
	COMP[7:0]							
Access	R/W	R/W	R/W	R/W	R/W	R/W	R/W	R/W
Reset	0	0	0	0	0	0	0	0

Bits 15:0 – COMP[15:0] Compare Value
The 16-bit value of COMPn is continuously compared with the 16-bit COUNT value. When a match occurs, the Compare n interrupt flag in the Interrupt Flag Status and Clear register (INTFLAG.CMPn) is set on the next counter cycle.

© 2025 Microchip Technology Inc. and its subsidiaries

16.9. Register Summary Mode 2

Offset	Name	Bit Pos.	7	6	5	4	3	2	1	0
0x00	CTRL	7:0	MATCHCLR	CLKREP			MODE[1:0]		ENABLE	SWRST
		15:8					PRESCALER[3:0]			
0x02 ... 0x03	Reserved									
0x04	EVCTRL	7:0	PEREOx	PEREOx	PEREOx	PEREOx	PEREOx	PEREOx	PEREOx	PEREOx
		15:8	OVFEO							ALARMEO0
0x06	INTENCLR	7:0	OVF	SYNCRDY						ALARM0
0x07	INTENSET	7:0	OVF	SYNCRDY						ALARM0
0x08	INTFLAG	7:0	OVF	SYNCRDY						ALARM0
0x09 ... 0x0F	Reserved									
0x10	CLOCK	7:0	MINUTE[1:0]		SECOND[5:0]					
		15:8	HOUR[3:0]				MINUTE[5:2]			
		23:16	MONTH[1:0]		DAY[4:0]					HOUR[4]
		31:24	YEAR[5:0]						MONTH[3:2]	
0x14 ... 0x17	Reserved									
0x18	ALARM0	7:0	MINUTE[1:0]		SECOND[5:0]					
		15:8	HOUR[3:0]				MINUTE[5:2]			
		23:16	MONTH[1:0]		DAY[4:0]					HOUR[4]
		31:24	YEAR[5:0]						MONTH[3:2]	
0x1C	MASK	7:0						SEL[2:0]		

© 2025 Microchip Technology Inc. and its subsidiaries

16.9.1. Control - MODE2

Name: CTRL
Offset: 0x00
Reset: 0x0000
Property: Enable-Protected, Write-Protected, Write-Synchronized

Table 16-21. Register Bit Attribute Legend

Symbol	Description	Symbol	Description	Symbol	Description
R	Readable bit	**HC**	Cleared by Hardware	(Grey cell)	Unimplemented
W	Writable bit	**HS**	Set by Hardware	**X**	Bit is unknown at Reset
K	Write to clear	**S**	Software settable bit	—	—

Bit	15	14	13	12	11	10	9	8
					PRESCALER[3:0]			
Access					R/W	R/W	R/W	R/W
Reset					0	0	0	0

Bit	7	6	5	4	3	2	1	0
	MATCHCLR	CLKREP			MODE[1:0]		ENABLE	SWRST
Access	R/W	R/W			R/W	R/W	R/W	W
Reset	0	0			0	0	0	0

Bits 11:8 – PRESCALER[3:0] Prescaler
These bits define the prescaling factor for the RTC clock source (GCLK_RTC) to generate the counter clock (CLK_RTC_CNT).
These bits are not synchronized.

PRESCALER[3:0]	Name	Description
0x0	DIV1	CLK_RTC_CNT = GCLK_RTC/1
0x1	DIV2	CLK_RTC_CNT = GCLK_RTC/2
0x2	DIV4	CLK_RTC_CNT = GCLK_RTC/4
0x3	DIV8	CLK_RTC_CNT = GCLK_RTC/8
0x4	DIV16	CLK_RTC_CNT = GCLK_RTC/16
0x5	DIV32	CLK_RTC_CNT = GCLK_RTC/32
0x6	DIV64	CLK_RTC_CNT = GCLK_RTC/64
0x7	DIV128	CLK_RTC_CNT = GCLK_RTC/128
0x8	DIV256	CLK_RTC_CNT = GCLK_RTC/256
0x9	DIV512	CLK_RTC_CNT = GCLK_RTC/512
0xA	DIV1024	CLK_RTC_CNT = GCLK_RTC/1024
0xB-0xF		Reserved

Bit 7 – MATCHCLR Clear on Match
This bit is valid only in Mode 0 and Mode 2. This bit can be written only when the peripheral is disabled.
This bit is not synchronized.

Value	Description
0	The counter is not cleared on a Compare/Alarm 0 match
1	The counter is cleared on a Compare/Alarm 0 match

Bit 6 – CLKREP Clock Representation
This bit is valid only in Mode 2 and determines how the hours are represented in the Clock Value (CLOCK) register. This bit can be written only when the peripheral is disabled.

© 2025 Microchip Technology Inc. and its subsidiaries

This bit is not synchronized.

Value	Description
0	24 Hour
1	12 Hour (AM/PM)

Bits 3:2 – MODE[1:0] Operating Mode
These bits define the operating mode of the RTC.
These bits are not synchronized.

MODE[1:0]	Name	Description
0x0	COUNT32	Mode 0: 32-bit Counter
0x1	COUNT16	Mode 1: 16-bit Counter
0x2	CLOCK	Mode 2: Clock/Calendar
0x3		Reserved

Bit 1 – ENABLE Enable
Due to synchronization, there is delay from writing CTRL.ENABLE until the peripheral is enabled/disabled. The value written to CTRL.ENABLE will read back immediately, and the Synchronization Busy bit in the Status register (STATUS.SYNCBUSY) will be set. STATUS.SYNCBUSY will be cleared when the operation is complete.
This bit is not enable-protected.

Value	Description
0	The peripheral is disabled or being disabled
1	The peripheral is enabled or being enabled

Bit 0 – SWRST Software Reset
Writing a zero to this bit has no effect.
Writing a one to this bit resets all registers in the RTC, except DBGCTRL, to their initial state, and the RTC will be disabled.
Writing a one to CTRL.SWRST will always take precedence, meaning that all other writes in the same write operation will be discarded.
Due to synchronization, there is a delay from writing CTRL.SWRST until the Reset is complete. CTRL.SWRST and STATUS.SYNCBUSY will both be cleared when the Reset is complete.
This bit is not enable-protected.

Value	Description
0	There is no Reset operation ongoing
1	The Reset operation is ongoing

© 2025 Microchip Technology Inc. and its subsidiaries

16.9.2. Event Control - MODE2

Name: EVCTRL
Offset: 0x04
Reset: 0x0000
Property: Enable-Protected, Write-Protected

Table 16-22. Register Bit Attribute Legend

Symbol	Description	Symbol	Description	Symbol	Description
R	Readable bit	**HC**	Cleared by Hardware	(Grey cell)	Unimplemented
W	Writable bit	**HS**	Set by Hardware	**X**	Bit is unknown at Reset
K	Write to clear	**S**	Software settable bit	—	—

Bit	15	14	13	12	11	10	9	8
	OVFEO							ALARMEO0
Access	R/W							R/W
Reset	0							0

Bit	7	6	5	4	3	2	1	0
	PEREOx	PEREOx	PEREOx	PEREOx	PEREOx	PEREOx	PEREOx	PEREOx
Access	R/W	R/W	R/W	R/W	R/W	R/W	R/W	R/W
Reset	0	0	0	0	0	0	0	0

Bit 15 – OVFEO Overflow Event Output Enable

Value	Description
0	Overflow event is disabled and will not be generated
1	Overflow event is enabled and will be generated for every overflow

Bit 8 – ALARMEO0 Alarm 0 Event Output Enable

Value	Description
0	Alarm 0 event is disabled and will not be generated
1	Alarm 0 event is enabled and will be generated for every alarm

Bits 7,6,5,4,3,2,1,0 – PEREOx Periodic Interval x Event Output Enable [x=7:0]

Value	Description
0	Periodic Interval x event is disabled and will not be generated
1	Periodic Interval x event is enabled and will be generated

© 2025 Microchip Technology Inc. and its subsidiaries

16.9.3. Interrupt Enable Clear - MODE2

Name: INTENCLR
Offset: 0x06
Reset: 0x00
Property: Write-Protected

Table 16-23. Register Bit Attribute Legend

Symbol	Description	Symbol	Description	Symbol	Description
R	Readable bit	**HC**	Cleared by Hardware	(Grey cell)	Unimplemented
W	Writable bit	**HS**	Set by Hardware	**X**	Bit is unknown at Reset
K	Write to clear	**S**	Software settable bit	—	—

Bit	7	6	5	4	3	2	1	0
	OVF	SYNCRDY						ALARM0
Access	R/W	R/W						R/W
Reset	0	0						0

Bit 7 – OVF Overflow Interrupt Enable
Writing a zero to this bit has no effect.
Writing a one to this bit will clear the Overflow Interrupt Enable bit and disable the corresponding interrupt.

Value	Description
0	The Overflow interrupt is disabled
1	The Overflow interrupt is enabled, and an interrupt request will be generated when the Overflow Interrupt flag is set

Bit 6 – SYNCRDY Synchronization Ready Interrupt Enable
Writing a zero to this bit has no effect.
Writing a one to this bit will clear the Synchronization Ready Interrupt Enable bit and disable the corresponding interrupt.

Value	Description
0	The Synchronization Ready interrupt is disabled
1	The Synchronization Ready interrupt is enabled, and an interrupt request will be generated when the Synchronization Ready Interrupt flag is set

Bit 0 – ALARM0 Alarm 0 Interrupt Enable
Writing a zero to this bit has no effect.
Writing a one to this bit disables the Alarm 0 interrupt.

Value	Description
0	The Alarm 0 interrupt is disabled
1	The Alarm 0 interrupt is enabled, and an interrupt request will be generated when the Alarm 0 Interrupt flag is set

© 2025 Microchip Technology Inc. and its subsidiaries

16.9.4. Interrupt Enable Set - MODE2

Name: INTENSET
Offset: 0x07
Reset: 0x00
Property: Write-Protected

Table 16-24. Register Bit Attribute Legend

Symbol	Description	Symbol	Description	Symbol	Description
R	Readable bit	**HC**	Cleared by Hardware	(Grey cell)	Unimplemented
W	Writable bit	**HS**	Set by Hardware	**X**	Bit is unknown at Reset
K	Write to clear	**S**	Software settable bit	—	—

Bit	7	6	5	4	3	2	1	0
	OVF	SYNCRDY						ALARM0
Access	R/W	R/W						R/W
Reset	0	0						0

Bit 7 – OVF Overflow Interrupt Enable
Writing a zero to this bit has no effect.
Writing a one to this bit will set the Overflow Interrupt Enable bit and enable the Overflow interrupt.

Value	Description
0	The Overflow interrupt is disabled
1	The Overflow interrupt is enabled

Bit 6 – SYNCRDY Synchronization Ready Interrupt Enable
Writing a zero to this bit has no effect.
Writing a one to this bit will set the Synchronization Ready Interrupt bit and enable the Synchronization Ready interrupt.

Value	Description
0	The Synchronization Ready interrupt is disabled
1	The Synchronization Ready interrupt is enabled

Bit 0 – ALARM0 Alarm 0 Interrupt Enable
Writing a zero to this bit has no effect.
Writing a one to this bit will set the Alarm 0 Interrupt Enable bit and enable the Alarm 0 interrupt.

Value	Description
0	The Alarm 0 interrupt is disabled
1	The Alarm 0 interrupt is enabled

© 2025 Microchip Technology Inc. and its subsidiaries

16.9.5. Interrupt Flag Status and Clear - MODE2

Name: INTFLAG
Offset: 0x08
Reset: 0x00
Property: -

Table 16-25. Register Bit Attribute Legend

Symbol	Description	Symbol	Description	Symbol	Description
R	Readable bit	**HC**	Cleared by Hardware	(Grey cell)	Unimplemented
W	Writable bit	**HS**	Set by Hardware	**X**	Bit is unknown at Reset
K	Write to clear	**S**	Software settable bit	—	—

Bit	7	6	5	4	3	2	1	0
	OVF	SYNCRDY						ALARM0
Access	R/W	R/W						R/W
Reset	0	0						0

Bit 7 – OVF Overflow
This flag is cleared by writing a one to the flag.
This flag is set on the next CLK_RTC_CNT cycle after an Overflow condition occurs, and an interrupt request will be generated if INTENCLR/SET.OVF is one.
Writing a zero to this bit has no effect.
Writing a one to this bit clears the Overflow Interrupt flag.

Bit 6 – SYNCRDY Synchronization Ready
This flag is cleared by writing a one to the flag.
This flag is set on a 1-to-0 transition of the Synchronization Busy bit in the Status register (STATUS.SYNCBUSY), except when caused by enable or Software Reset, and an interrupt request will be generated if INTENCLR/SET.SYNCRDY is one.
Writing a zero to this bit has no effect.
Writing a one to this bit clears the Synchronization Ready Interrupt flag.

Bit 0 – ALARM0 Alarm 0
This flag is cleared by writing a one to the flag.
This flag is set on the next CLK_RTC_CNT cycle after a match with ALARM0 condition occurs, and an interrupt request will be generated if INTENCLR/SET.ALARM0 is also one.
Writing a zero to this bit has no effect.
Writing a one to this bit clears the Alarm 0 Interrupt flag.

© 2025 Microchip Technology Inc. and its subsidiaries

16.9.6. Clock Value - MODE2

Name: CLOCK
Offset: 0x10
Reset: 0x00000000
Property: Read-Synchronized, Write-Protected, Write-Synchronized

Table 16-26. Register Bit Attribute Legend

Symbol	Description	Symbol	Description	Symbol	Description
R	Readable bit	**HC**	Cleared by Hardware	(Grey cell)	Unimplemented
W	Writable bit	**HS**	Set by Hardware	**X**	Bit is unknown at Reset
K	Write to clear	**S**	Software settable bit	—	—

Bit	31	30	29	28	27	26	25	24
	YEAR[5:0]						MONTH[3:2]	
Access	R/W	R/W	R/W	R/W	R/W	R/W	R/W	R/W
Reset	0	0	0	0	0	0	0	0

Bit	23	22	21	20	19	18	17	16
	MONTH[1:0]		DAY[4:0]					HOUR[4]
Access	R/W	R/W	R/W	R/W	R/W	R/W	R/W	R/W
Reset	0	0	0	0	0	0	0	0

Bit	15	14	13	12	11	10	9	8
	HOUR[3:0]				MINUTE[5:2]			
Access	R/W	R/W	R/W	R/W	R/W	R/W	R/W	R/W
Reset	0	0	0	0	0	0	0	0

Bit	7	6	5	4	3	2	1	0
	MINUTE[1:0]		SECOND[5:0]					
Access	R/W	R/W	R/W	R/W	R/W	R/W	R/W	R/W
Reset	0	0	0	0	0	0	0	0

Bits 31:26 – YEAR[5:0] Year
The year offset with respect to the reference year (defined in software).
The year is considered a leap year if YEAR[1:0] is zero.

Bits 25:22 – MONTH[3:0] Month
1 – January
2 – February
...
12 – December

Bits 21:17 – DAY[4:0] Day
Day starts at 1 and ends at 28, 29, 30 or 31, depending on the month and year.

Bits 16:12 – HOUR[4:0] Hour
When CTRL.CLKREP is zero, the Hour bit group is in 24-hour format, with values 0-23. When CTRL.CLKREP is one, HOUR[3:0] has values 1-12 and HOUR[4] represents AM (0) or PM (1).

© 2025 Microchip Technology Inc. and its subsidiaries

Table 16-27. Hour

HOUR[4:0]	CLOCK.HOUR[4]	CLOCK.HOUR[3:0]	Description
0	0x00 - 0x17		Hour (0 - 23)
	0x18 - 0x1F		Reserved
1	0	0x0	Reserved
		0x1 - 0xC	AM Hour (1 - 12)
		0xD - 0xF	Reserved
	1	0x0	Reserved
		0x1 - 0xC	PM Hour (1 - 12)
		0xF - 0xF	Reserved

Bits 11:6 – MINUTE[5:0] Minute
0 – 59.

Bits 5:0 – SECOND[5:0] Second
0– 59.

© 2025 Microchip Technology Inc. and its subsidiaries

16.9.7. Alarm 0 Value - MODE2

Name: ALARM0
Offset: 0x18
Reset: 0x00000000
Property: Write-Protected, Write-Synchronized

The 32-bit value of ALARM0 is continuously compared with the 32-bit CLOCK value, based on the masking set by MASKn.SEL. When a match occurs, the Alarm 0 interrupt flag in the Interrupt Flag Status and Clear register (INTFLAG.ALARMn) is set on the next counter cycle, and the counter is cleared if CTRL.MATCHCLR is one.

Table 16-28. Register Bit Attribute Legend

Symbol	Description	Symbol	Description	Symbol	Description
R	Readable bit	**HC**	Cleared by Hardware	(Grey cell)	Unimplemented
W	Writable bit	**HS**	Set by Hardware	**X**	Bit is unknown at Reset
K	Write to clear	**S**	Software settable bit	—	—

Bit	31	30	29	28	27	26	25	24
	YEAR[5:0]						MONTH[3:2]	
Access	R/W	R/W	R/W	R/W	R/W	R/W	R/W	R/W
Reset	0	0	0	0	0	0	0	0

Bit	23	22	21	20	19	18	17	16
	MONTH[1:0]		DAY[4:0]					HOUR[4]
Access	R/W	R/W	R/W	R/W	R/W	R/W	R/W	R/W
Reset	0	0	0	0	0	0	0	0

Bit	15	14	13	12	11	10	9	8
	HOUR[3:0]				MINUTE[5:2]			
Access	R/W	R/W	R/W	R/W	R/W	R/W	R/W	R/W
Reset	0	0	0	0	0	0	0	0

Bit	7	6	5	4	3	2	1	0
	MINUTE[1:0]		SECOND[5:0]					
Access	R/W	R/W	R/W	R/W	R/W	R/W	R/W	R/W
Reset	0	0	0	0	0	0	0	0

Bits 31:26 – YEAR[5:0] Year
The alarm year. Years are only matched if MASKn.SEL is 6.

Bits 25:22 – MONTH[3:0] Month
The alarm month. Months are matched only if MASKn.SEL is greater than 4.

Bits 21:17 – DAY[4:0] Day
The alarm day. Days are matched only if MASKn.SEL is greater than 3.

Bits 16:12 – HOUR[4:0] Hour
The alarm hour. Hours are matched only if MASKn.SEL is greater than 2.

Bits 11:6 – MINUTE[5:0] Minute
The alarm minute. Minutes are matched only if MASKn.SEL is greater than 1.

© 2025 Microchip Technology Inc. and its subsidiaries

Bits 5:0 – SECOND[5:0] Second
The alarm second. Seconds are matched only if MASKn.SEL is greater than 0.

© 2025 Microchip Technology Inc. and its subsidiaries

16.9.8. Alarm n Mask - MODE2

Name: MASK
Offset: 0x1C
Reset: 0x00
Property: Write-Protected, Write-Synchronized

Table 16-29. Register Bit Attribute Legend

Symbol	Description	Symbol	Description	Symbol	Description
R	Readable bit	**HC**	Cleared by Hardware	(Grey cell)	Unimplemented
W	Writable bit	**HS**	Set by Hardware	**X**	Bit is unknown at Reset
K	Write to clear	**S**	Software settable bit	—	—

Bit	7	6	5	4	3	2	1	0
						SEL[2:0]		
Access						R/W	R/W	R/W
Reset						0	0	0

Bits 2:0 – SEL[2:0] Alarm Mask Selection
These bits define which bit groups of Alarm n are valid.

SEL[2:0]	Name	Description
0x0	OFF	Alarm Disabled
0x1	SS	Match seconds only
0x2	MMSS	Match seconds and minutes only
0x3	HHMMSS	Match seconds, minutes, and hours only
0x4	DDHHMMSS	Match seconds, minutes, hours, and days only
0x5	MMDDHHMMSS	Match seconds, minutes, hours, days, and months only
0x6	YYMMDDHHMMSS	Match seconds, minutes, hours, days, months, and years
0x7		Reserved

© 2025 Microchip Technology Inc. and its subsidiaries

17. EIC – External Interrupt Controller

17.1. Overview

The External Interrupt Controller (EIC) allows external pins to be configured as interrupt lines. Each interrupt line can be individually masked and can generate an interrupt on rising, falling, both edges, or on high or low levels. Each external pin has a configurable filter to remove spikes. Also, each external pin can be configured to be asynchronous in order to wake-up the device from Sleep modes where all clocks have been disabled. External pins can generate an event.

A separate Non-Maskable Interrupt (NMI) is supported. It has properties similar to the other external interrupts, but is connected to the NMI request of the CPU, enabling it to interrupt any other Interrupt mode.

17.2. Features

- Up to external pins (EXTINTx), plus one non-maskable pin (NMI)
- Dedicated, Individually Maskable Interrupt for Each Pin
- Interrupt on Rising, Falling, or Both Edges
- Interrupt on High or Low Levels
- Asynchronous Interrupts for Sleep Modes Without Clock
- Filtering of External Pins
- Event Generation from EXTINTx

17.3. Block Diagram

Figure 17-1. EIC Block Diagram

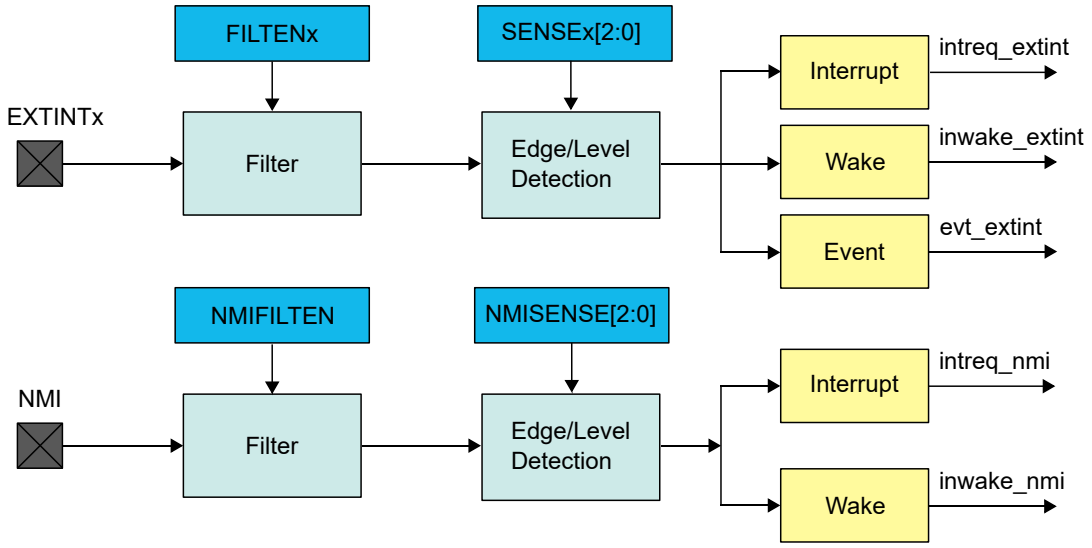

17.4. Signal Description

Signal Name	Type	Description
EXTINT[15..0]	Digital Input	External interrupt pin
NMI	Digital Input	Non-maskable interrupt pin

One signal may be available on several pins.

© 2025 Microchip Technology Inc. and its subsidiaries

17.5. Product Dependencies

In order to use this EIC, other parts of the system must be configured correctly, as described below.

Table 17-1. Peripherals Configuration Summary

Peripheral Name	Base Address	IRQ Line	AHB Clock		APB Clock		Generic Clock	PAC		Events		
			Index	Enabled at Reset	Index	Enabled at Reset	Index	Index	Prot at Reset	User	Generator	SleepWalking
EIC	0x40001800	NMI, 4			6	Y	3	6	N		12-27: EXTINT0-15	Y

17.5.1. I/O Lines

Using the EIC's I/O lines requires the I/O pins to be configured.

17.5.2. Power Management

All interrupts are available down to STANDBY Sleep mode, but the EIC can be configured to automatically mask some interrupts in order to prevent device wake-up.

The EIC will continue to operate in any Sleep mode where the selected source clock is running. The EIC's interrupts can be used to wake up the device from Sleep modes. Events connected to the Event System can trigger other operations in the system without exiting Sleep modes.

17.5.3. Clocks

The EIC bus clock (CLK_EIC_APB) can be enabled and disabled in the Power Manager, and the default state of CLK_EIC_APB can be found in the *Peripheral Clock Masking* section in PM – Power Manager.

A generic clock (GCLK_EIC) is required to clock the peripheral. This clock must be configured and enabled in the Generic Clock Controller before using the peripheral. Refer to *GCLK – Generic Clock Controller*.

This generic clock is asynchronous to the user interface clock (CLK_EIC_APB). Due to this asynchronicity, writes to certain registers will require synchronization between the clock domains. Refer to Synchronization for further details.

17.5.4. Interrupts

There are several interrupt request lines, some (the number depends on the product variant) for the external interrupts (EXTINT) and one for Non-Maskable Interrupt (NMI).

Each EXTINT interrupt request line is connected to the interrupt controller. Using the EIC interrupt requires the interrupt controller to be configured first.

The NMI interrupt request line is connected to the interrupt controller, but does not require the interrupt to be configured.

17.5.5. Events

The events are connected to the Event System. Using the events requires the Event System to be configured first.

17.5.6. Debug Operation

When the CPU is halted in Debug mode, the EIC continues normal operation. If the EIC is configured in a way that requires it to be periodically serviced by the CPU through interrupts or similar, improper operation or data loss may result during debugging.

17.5.7. Register Access Protection

All registers with write access can be write-protected optionally by the Peripheral Access Controller (PAC), except for the following registers:

- Interrupt Flag Status and Clear register (INTFLAG)

© 2025 Microchip Technology Inc. and its subsidiaries

- Non-Maskable Interrupt Flag Status and Clear register (NMIFLAG)

Optional write protection by the Peripheral Access Controller (PAC) is denoted by the "PAC Write Protection" property in each individual register description.

PAC write protection does not apply to accesses through an external debugger.

17.5.8. Analog Connections

Not applicable.

17.6. Functional Description

17.6.1. Principle of Operation

The EIC detects Edge or Level condition to generate interrupts to the CPU interrupt controller or events to the Event System. Each external interrupt pin (EXTINT) can be filtered using majority vote filtering, clocked by GCLK_EIC

17.6.2. Basic Operation

17.6.2.1. Initialization

The EIC must be initialized in the following order:

1. Enable CLK_EIC_APB
2. If edge detection or filtering is required, GCLK_EIC must be enabled
3. Write the EIC configuration registers (EVCTRL, WAKEUP, CONFIGy)
4. Enable the EIC

To use NMI, GCLK_EIC must be enabled after EIC configuration (NMICTRL).

17.6.2.2. Enabling, Disabling and Resetting

The EIC is enabled by writing a '1' the Enable bit in the Control register (CTRL.ENABLE). The EIC is disabled by writing CTRL.ENABLE to '0'.

The EIC is reset by setting the Software Reset bit in the Control register (CTRL.SWRST). All registers in the EIC will be reset to their initial state, and the EIC will be disabled.

Refer to the CTRL register description for details.

17.6.3. External Pin Processing

Each external pin can be configured to generate an interrupt/event on edge detection (rising, falling or both edges) or level detection (high or low). The sense of external interrupt pins is configured by writing the Input Sense x bits in the Config n register (CONFIGn.SENSEx). The corresponding Interrupt Flag (INTFLAG.EXTINT[x]) in the Interrupt Flag Status and Clear register (INTFLAG) is set when the Interrupt condition is met.

When the Interrupt flag has been cleared in Edge-Sensitive mode, INTFLAG.EXTINT[x] will only be set if a new Interrupt condition is met. In Level-Sensitive mode, when interrupt has been cleared, INTFLAG.EXTINT[x] will be set immediately if the EXTINTx pin still matches the Interrupt condition.

Each external pin can be filtered by a majority vote filtering, clocked by GCLK_EIC. Filtering is enabled if bit Filter Enable x in the Configuration n register (CONFIGn.FILTENx) is written to '1'. The majority vote filter samples the external pin three times with GCLK_EIC and outputs the value when two or more samples are equal.

Table 17-2. Majority Vote Filter

Samples [0, 1, 2]	Filter Output
[0,0,0]	0

© 2025 Microchip Technology Inc. and its subsidiaries

[0,0,1]	0
[0,1,0]	0
[0,1,1]	1
[1,0,0]	0
[1,0,1]	1
[1,1,0]	1
[1,1,1]	1

When an external interrupt is configured for level detection, or if filtering is disabled, detection is made asynchronously, and GCLK_EIC is not required.

If filtering or edge detection is enabled, the EIC automatically requests the GCLK_EIC to operate (GCLK_EIC must be enabled in the GCLK module, see *GCLK – Generic Clock Controller* for details). If level detection is enabled, GCLK_EIC is not required, but interrupt and events can still be generated.

When an external interrupt is configured for level detection and when filtering is disabled, detection is done asynchronously. Asynchronous detection does not require GCLK_EIC, but interrupt and events can still be generated. If filtering or edge detection is enabled, the EIC automatically requests GCLK_EIC to operate. GCLK_EIC must be enabled in the GCLK module.

Figure 17-2. Interrupt Detections

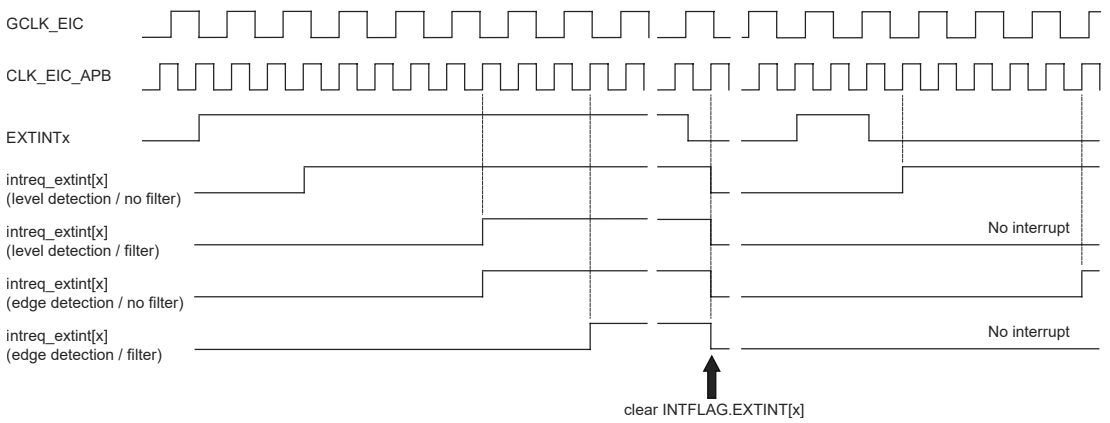

The detection delay depends on the Detection mode.

Table 17-3. Interrupt Latency

Detection mode	Latency (worst case)
Level without filter	Three CLK_EIC_APB periods
Level with filter	Four GCLK_EIC periods + Three CLK_EIC_APB periods
Edge without filter	Four GCLK_EIC periods + Three CLK_EIC_APB periods
Edge with filter	Six GCLK_EIC periods + Three CLK_EIC_APB periods

17.6.4. Additional Features

17.6.4.1. Non-Maskable Interrupt (NMI)

The non-maskable interrupt pin can also generate an interrupt on edge or level detection, but it is configured with the dedicated NMI Control register (NMICTRL). To select the sense for NMI, write to the NMISENSE bit group in the NMI Control register (NMICTRL.NMISENSE). NMI filtering is enabled by writing a '1' to the NMI Filter Enable bit (NMICTRL.NMIFILTEN).

If edge detection or filtering is required, enable GCLK_EIC or CLK_ULP32K.

© 2025 Microchip Technology Inc. and its subsidiaries

NMI detection is enabled only by the NMICTRL.NMISENSE value, and the EIC module is not required to be enabled.

When an NMI is detected, the Non-maskable Interrupt flag in the NMI Flag Status and Clear register is set (NMIFLAG.NMI). NMI interrupt generation is always enabled, and NMIFLAG.NMI generates an interrupt request when set.

17.6.5. Interrupts

The EIC has the following interrupt sources:

- External interrupt (EXTINTx) pins. See Basic Operation.
- Non-maskable interrupt (NMI) pin. See Additional Features.

Each interrupt source has an associated Interrupt flag. The interrupt flag in the Interrupt Flag Status and Clear register (INTFLAG) is set when an Interrupt condition occurs (NMIFLAG for NMI). Each interrupt, except NMI, can be individually enabled by setting the corresponding bit in the Interrupt Enable Set register (INTENSET = 1), and disabled by setting the corresponding bit in the Interrupt Enable Clear register (INTENCLR = 1). The status of enabled interrupts can be read from either INTENSET or INTENCLR.

An interrupt request is generated when the interrupt flag is set and the corresponding interrupt is enabled. The interrupt request remains active until the interrupt flag is cleared, the interrupt is disabled, or the EIC is reset. See the INTFLAG register for details on how to clear Interrupt flags. The EIC has one interrupt request line for each external interrupt (EXTINTx) and one line for NMI. The user must read the INTFLAG (or NMIFLAG) register to determine which Interrupt condition is present.

Notes:

1. Interrupts must be globally enabled for interrupt requests to be generated.
2. If an external interrupt (EXTINT) is common on two or more I/O pins, only one will be active (the first one programmed).

17.6.6. Events

The EIC can generate the following output events:

- External event from pin (EXTINT0-7).

Setting an Event Output Control register (EVCTRL.EXTINTEO) enables the corresponding output event. Clearing this bit disables the corresponding output event. Refer to *Event System* for details on configuring the Event System.

When the condition on pin EXTINTx matches the configuration in the CONFIGn.SENSEx bit field, the corresponding event is generated, if enabled.

17.6.7. Sleep Mode Operation

In Sleep modes, an EXTINTx pin can wake up the device if the corresponding condition matches the configuration in CONFIGy register. Writing a one to a Wake-Up Enable bit (WAKEUP.WAKEUPEN[x]) enables the wake-up from pin EXTINTx. Writing a zero to a Wake-Up Enable bit (WAKEUP.WAKEUPEN[x]) disables the wake-up from pin EXTINTx.

Using WAKEUPEN[x]=1 with INTENSET=0 is not recommended.

In Sleep modes, an EXTINTx pin can wake up the device if the corresponding condition matches the configuration in CONFIGn register, and the corresponding bit in the Interrupt Enable Set register (INTENSET) is written to '1'. WAKEUP.WAKEUPEN[x]=1 can enable the wake-up from pin EXTINTx.

© 2025 Microchip Technology Inc. and its subsidiaries

Figure 17-3. Wake-Up Operation Example (High-Level Detection, No Filter, WAKEUPEN[x]=1)

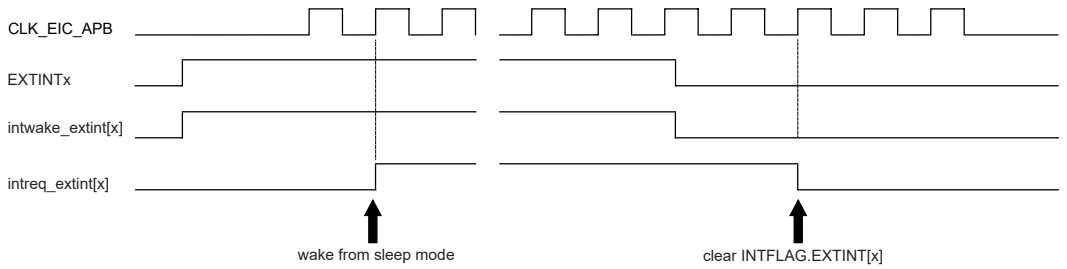

17.6.8. Synchronization

Due to asynchronicity between the main clock domain and the peripheral clock domains, some registers need to be synchronized when written or read.

When executing an operation that requires synchronization, the Synchronization Busy bit in the Status register (STATUS.SYNCBUSY) will be set immediately, and cleared when synchronization is complete.

If an operation that requires synchronization is executed while STATUS.SYNCBUSY is one, the bus will be stalled. All operations will complete successfully, but the CPU will be stalled, and interrupts will be pending as long as the bus is stalled.

The following bits are synchronized when written:

- Software Reset bit in the Control register (CTRL.SWRST)
- Enable bit in the Control register (CTRL.ENABLE)

© 2025 Microchip Technology Inc. and its subsidiaries

17.7. Register Summary

Offset	Name	Bit Pos.	7	6	5	4	3	2	1	0
0x00	CTRL	7:0							ENABLE	SWRST
0x01	STATUS	7:0	SYNCBUSY							
0x02	NMICTRL	7:0					NMIFILTEN	NMISENSE[2:0]		
0x03	NMIFLAG	7:0								NMI
0x04	EVCTRL	7:0	EXTINTEO7	EXTINTEO6	EXTINTEO5	EXTINTEO4	EXTINTEO3	EXTINTEO2	EXTINTEO1	EXTINTEO0
		15:8	EXTINTEO15	EXTINTEO14	EXTINTEO13	EXTINTEO12	EXTINTEO11	EXTINTEO10	EXTINTEO9	EXTINTEO8
		23:16								
		31:24								
0x08	INTENCLR	7:0	EXTINT7	EXTINT6	EXTINT5	EXTINT4	EXTINT3	EXTINT2	EXTINT1	EXTINT0
		15:8	EXTINT15	EXTINT14	EXTINT13	EXTINT12	EXTINT11	EXTINT10	EXTINT9	EXTINT8
		23:16								
		31:24								
0x0C	INTENSET	7:0	EXTINT7	EXTINT6	EXTINT5	EXTINT4	EXTINT3	EXTINT2	EXTINT1	EXTINT0
		15:8	EXTINT15	EXTINT14	EXTINT13	EXTINT12	EXTINT11	EXTINT10	EXTINT9	EXTINT8
		23:16								
		31:24								
0x10	INTFLAG	7:0	EXTINT7	EXTINT6	EXTINT5	EXTINT4	EXTINT3	EXTINT2	EXTINT1	EXTINT0
		15:8	EXTINT15	EXTINT14	EXTINT13	EXTINT12	EXTINT11	EXTINT10	EXTINT9	EXTINT8
		23:16								
		31:24								
0x14	WAKEUP	7:0	WAKEUPEN7	WAKEUPEN6	WAKEUPEN5	WAKEUPEN4	WAKEUPEN3	WAKEUPEN2	WAKEUPEN1	WAKEUPEN0
		15:8	WAKEUPEN15	WAKEUPEN14	WAKEUPEN13	WAKEUPEN12	WAKEUPEN11	WAKEUPEN10	WAKEUPEN9	WAKEUPEN8
		23:16								
		31:24								
0x18	CONFIG0	7:0	FILTEN1	SENSE1[2:0]			FILTEN0	SENSE0[2:0]		
		15:8	FILTEN3	SENSE3[2:0]			FILTEN2	SENSE2[2:0]		
		23:16	FILTEN5	SENSE5[2:0]			FILTEN4	SENSE4[2:0]		
		31:24	FILTEN7	SENSE7[2:0]			FILTEN6	SENSE6[2:0]		
0x1C	CONFIG1	7:0	FILTEN1	SENSE1[2:0]			FILTEN0	SENSE0[2:0]		
		15:8	FILTEN3	SENSE3[2:0]			FILTEN2	SENSE2[2:0]		
		23:16	FILTEN5	SENSE5[2:0]			FILTEN4	SENSE4[2:0]		
		31:24	FILTEN7	SENSE7[2:0]			FILTEN6	SENSE6[2:0]		

© 2025 Microchip Technology Inc. and its subsidiaries

17.7.1. Control

Name: CTRL
Offset: 0x00
Reset: 0x00
Property: Write-Protected, Write-Synchronized

Table 17-4. Register Bit Attribute Legend

Symbol	Description	Symbol	Description	Symbol	Description
R	Readable bit	**HC**	Cleared by Hardware	(Grey cell)	Unimplemented
W	Writable bit	**HS**	Set by Hardware	**X**	Bit is unknown at Reset
K	Write to clear	**S**	Software settable bit	—	—

Bit	7	6	5	4	3	2	1	0
							ENABLE	SWRST
Access							R/W	R/W
Reset							0	0

Bit 1 – ENABLE Enable

Due to synchronization, there is delay from writing CTRL.ENABLE until the peripheral is enabled/disabled. The value written to CTRL.ENABLE will read back immediately, and the Synchronization Busy bit in the Status register (STATUS.SYNCBUSY) will be set. STATUS.SYNCBUSY will be cleared when the operation is complete.

Value	Description
0	The EIC is disabled.
1	The EIC is enabled.

Bit 0 – SWRST Software Reset

Writing a zero to this bit has no effect.
Writing a one to this bit resets all registers in the EIC to their initial state, and the EIC will be disabled.
Writing a one to CTRL.SWRST will always take precedence, meaning that all other writes in the same write operation will be discarded.
Due to synchronization, there is a delay from writing CTRL.SWRST until the reset is complete. CTRL.SWRST and STATUS.SYNCBUSY will both be cleared when the reset is complete.

Value	Description
0	There is no ongoing reset operation.
1	The reset operation is ongoing.

© 2025 Microchip Technology Inc. and its subsidiaries

17.7.2. Status

Name: STATUS
Offset: 0x01
Reset: 0x00
Property: -

Table 17-5. Register Bit Attribute Legend

Symbol	Description	Symbol	Description	Symbol	Description
R	Readable bit	**HC**	Cleared by Hardware	(Grey cell)	Unimplemented
W	Writable bit	**HS**	Set by Hardware	**X**	Bit is unknown at Reset
K	Write to clear	**S**	Software settable bit	—	—

Bit	7	6	5	4	3	2	1	0
	SYNCBUSY							
Access	R							
Reset	0							

Bit 7 – SYNCBUSY Synchronization Busy
This bit is cleared when the synchronization of registers between the clock domains is complete.
This bit is set when the synchronization of registers between clock domains is started.

© 2025 Microchip Technology Inc. and its subsidiaries

17.7.3. Non-Maskable Interrupt Control

Name: NMICTRL
Offset: 0x02
Reset: 0x00
Property: Write-Protected

Table 17-6. Register Bit Attribute Legend

Symbol	Description	Symbol	Description	Symbol	Description
R	Readable bit	**HC**	Cleared by Hardware	(Grey cell)	Unimplemented
W	Writable bit	**HS**	Set by Hardware	**X**	Bit is unknown at Reset
K	Write to clear	**S**	Software settable bit	—	—

Bit	7	6	5	4	3	2	1	0
					NMIFILTEN	NMISENSE[2:0]		
Access					R/W	R/W	R/W	R/W
Reset					0	0	0	0

Bit 3 – NMIFILTEN Non-Maskable Interrupt Filter Enable

Value	Description
0	NMI filter is disabled.
1	NMI filter is enabled.

Bits 2:0 – NMISENSE[2:0] Non-Maskable Interrupt Sense
These bits define on which edge or level the NMI triggers.

NMISENSE[2:0]	Name	Description
0x0	NONE	No detection
0x1	RISE	Rising-edge detection
0x2	FALL	Falling-edge detection
0x3	BOTH	Both-edges detection
0x4	HIGH	High-level detection
0x5	LOW	Low-level detection
0x6-0x7		Reserved

© 2025 Microchip Technology Inc. and its subsidiaries

17.7.4. Non-Maskable Interrupt Flag Status and Clear

Name: NMIFLAG
Offset: 0x03
Reset: 0x00
Property: -

Table 17-7. Register Bit Attribute Legend

Symbol	Description	Symbol	Description	Symbol	Description
R	Readable bit	**HC**	Cleared by Hardware	(Grey cell)	Unimplemented
W	Writable bit	**HS**	Set by Hardware	**X**	Bit is unknown at Reset
K	Write to clear	**S**	Software settable bit	—	—

Bit	7	6	5	4	3	2	1	0
								NMI
Access								R/W
Reset								0

Bit 0 – NMI Non-Maskable Interrupt
This flag is cleared by writing a one to it.
This flag is set when the NMI pin matches the NMI sense configuration, and will generate an interrupt request.
Writing a zero to this bit has no effect.
Writing a one to this bit clears the Non-maskable Interrupt flag.

© 2025 Microchip Technology Inc. and its subsidiaries

17.7.5. Event Control

Name: EVCTRL
Offset: 0x04
Reset: 0x00000000
Property: Write-Protected

Table 17-8. Register Bit Attribute Legend

Symbol	Description	Symbol	Description	Symbol	Description
R	Readable bit	**HC**	Cleared by Hardware	(Grey cell)	Unimplemented
W	Writable bit	**HS**	Set by Hardware	**X**	Bit is unknown at Reset
K	Write to clear	**S**	Software settable bit	—	—

Bit	31	30	29	28	27	26	25	24
Access								
Reset								

Bit	23	22	21	20	19	18	17	16
Access								
Reset								

Bit	15	14	13	12	11	10	9	8
	EXTINTEO15	EXTINTEO14	EXTINTEO13	EXTINTEO12	EXTINTEO11	EXTINTEO10	EXTINTEO9	EXTINTEO8
Access	R/W	R/W	R/W	R/W	R/W	R/W	R/W	R/W
Reset	0	0	0	0	0	0	0	0

Bit	7	6	5	4	3	2	1	0
	EXTINTEO7	EXTINTEO6	EXTINTEO5	EXTINTEO4	EXTINTEO3	EXTINTEO2	EXTINTEO1	EXTINTEO0
Access	R/W	R/W	R/W	R/W	R/W	R/W	R/W	R/W
Reset	0	0	0	0	0	0	0	0

Bits 0, 1, 2, 3, 4, 5, 6, 7, 8, 9, 10, 11, 12, 13, 14, 15 – EXTINTEO External Interrupt x Event Output Enable [x=15..0]

These bits indicate whether the event associated with the EXTINTx pin is enabled or not to generated for every detection.

Value	Description
0	Event from pin EXTINTx is disabled.
1	Event from pin EXTINTx is enabled.

© 2025 Microchip Technology Inc. and its subsidiaries

17.7.6. Interrupt Enable Clear

Name: INTENCLR
Offset: 0x08
Reset: 0x00000000
Property: Write-Protected

Table 17-9. Register Bit Attribute Legend

Symbol	Description	Symbol	Description	Symbol	Description
R	Readable bit	**HC**	Cleared by Hardware	(Grey cell)	Unimplemented
W	Writable bit	**HS**	Set by Hardware	**X**	Bit is unknown at Reset
K	Write to clear	**S**	Software settable bit	—	—

Bit	31	30	29	28	27	26	25	24
Access								
Reset								

Bit	23	22	21	20	19	18	17	16
Access								
Reset								

Bit	15	14	13	12	11	10	9	8
	EXTINT15	EXTINT14	EXTINT13	EXTINT12	EXTINT11	EXTINT10	EXTINT9	EXTINT8
Access	R/W	R/W	R/W	R/W	R/W	R/W	R/W	R/W
Reset	0	0	0	0	0	0	0	0

Bit	7	6	5	4	3	2	1	0
	EXTINT7	EXTINT6	EXTINT5	EXTINT4	EXTINT3	EXTINT2	EXTINT1	EXTINT0
Access	R/W	R/W	R/W	R/W	R/W	R/W	R/W	R/W
Reset	0	0	0	0	0	0	0	0

Bits 0, 1, 2, 3, 4, 5, 6, 7, 8, 9, 10, 11, 12, 13, 14, 15 – EXTINT External Interrupt x Enable [x=15..0]
Writing a zero to this bit has no effect.
Writing a one to this bit will clear the External Interrupt x Enable bit, which disables the external interrupt.

Value	Description
0	The external interrupt x is disabled.
1	The external interrupt x is enabled.

© 2025 Microchip Technology Inc. and its subsidiaries

17.7.7. Interrupt Enable Set

Name: INTENSET
Offset: 0x0C
Reset: 0x00000000
Property: Write-Protected

Table 17-10. Register Bit Attribute Legend

Symbol	Description	Symbol	Description	Symbol	Description
R	Readable bit	**HC**	Cleared by Hardware	(Grey cell)	Unimplemented
W	Writable bit	**HS**	Set by Hardware	**X**	Bit is unknown at Reset
K	Write to clear	**S**	Software settable bit	—	—

Bit	31	30	29	28	27	26	25	24
Access								
Reset								

Bit	23	22	21	20	19	18	17	16
Access								
Reset								

Bit	15	14	13	12	11	10	9	8
	EXTINT15	EXTINT14	EXTINT13	EXTINT12	EXTINT11	EXTINT10	EXTINT9	EXTINT8
Access	R/W	R/W	R/W	R/W	R/W	R/W	R/W	R/W
Reset	0	0	0	0	0	0	0	0

Bit	7	6	5	4	3	2	1	0
	EXTINT7	EXTINT6	EXTINT5	EXTINT4	EXTINT3	EXTINT2	EXTINT1	EXTINT0
Access	R/W	R/W	R/W	R/W	R/W	R/W	R/W	R/W
Reset	0	0	0	0	0	0	0	0

Bits 0, 1, 2, 3, 4, 5, 6, 7, 8, 9, 10, 11, 12, 13, 14, 15 – EXTINT External Interrupt x Enable [x=15..0]
Writing a zero to this bit has no effect.
Writing a one to this bit will set the External Interrupt x Enable bit, which enables the external interrupt.

Value	Description
0	The external interrupt x is disabled.
1	The external interrupt x is enabled.

© 2025 Microchip Technology Inc. and its subsidiaries

17.7.8. Interrupt Flag Status and Clear

Name: INTFLAG
Offset: 0x10
Reset: 0x00000000
Property: -

Table 17-11. Register Bit Attribute Legend

Symbol	Description	Symbol	Description	Symbol	Description
R	Readable bit	**HC**	Cleared by Hardware	(Grey cell)	Unimplemented
W	Writable bit	**HS**	Set by Hardware	**X**	Bit is unknown at Reset
K	Write to clear	**S**	Software settable bit	—	—

Bit	31	30	29	28	27	26	25	24
Access								
Reset								

Bit	23	22	21	20	19	18	17	16
Access								
Reset								

Bit	15	14	13	12	11	10	9	8
	EXTINT15	EXTINT14	EXTINT13	EXTINT12	EXTINT11	EXTINT10	EXTINT9	EXTINT8
Access	R/W	R/W	R/W	R/W	R/W	R/W	R/W	R/W
Reset	0	0	0	0	0	0	0	0

Bit	7	6	5	4	3	2	1	0
	EXTINT7	EXTINT6	EXTINT5	EXTINT4	EXTINT3	EXTINT2	EXTINT1	EXTINT0
Access	R/W	R/W	R/W	R/W	R/W	R/W	R/W	R/W
Reset	0	0	0	0	0	0	0	0

Bits 0, 1, 2, 3, 4, 5, 6, 7, 8, 9, 10, 11, 12, 13, 14, 15 – EXTINT External Interrupt x [x=15..0]
This flag is cleared by writing a one to it.
This flag is set when EXTINTx pin matches the external interrupt sense configuration and will generate an interrupt request if INTENCLR/SET.EXTINT[x] is one.
Writing a zero to this bit has no effect.
Writing a one to this bit clears the External Interrupt x flag.

© 2025 Microchip Technology Inc. and its subsidiaries

17.7.9. Wake-Up Enable

Name: WAKEUP
Offset: 0x14
Reset: 0x00000000
Property: Write-Protected

Table 17-12. Register Bit Attribute Legend

Symbol	Description	Symbol	Description	Symbol	Description
R	Readable bit	**HC**	Cleared by Hardware	(Grey cell)	Unimplemented
W	Writable bit	**HS**	Set by Hardware	**X**	Bit is unknown at Reset
K	Write to clear	**S**	Software settable bit	—	—

Bit	31	30	29	28	27	26	25	24
Access								
Reset								

Bit	23	22	21	20	19	18	17	16
Access								
Reset								

Bit	15	14	13	12	11	10	9	8
	WAKEUPEN15	WAKEUPEN14	WAKEUPEN13	WAKEUPEN12	WAKEUPEN11	WAKEUPEN10	WAKEUPEN9	WAKEUPEN8
Access	R/W	R/W	R/W	R/W	R/W	R/W	R/W	R/W
Reset	0	0	0	0	0	0	0	0

Bit	7	6	5	4	3	2	1	0
	WAKEUPEN7	WAKEUPEN6	WAKEUPEN5	WAKEUPEN4	WAKEUPEN3	WAKEUPEN2	WAKEUPEN1	WAKEUPEN0
Access	R/W	R/W	R/W	R/W	R/W	R/W	R/W	R/W
Reset	0	0	0	0	0	0	0	0

Bits 0, 1, 2, 3, 4, 5, 6, 7, 8, 9, 10, 11, 12, 13, 14, 15 – WAKEUPEN External Interrupt x Wake-up Enable [x=15..0]

This bit enables or disables wake-up from sleep modes when the EXTINTx pin matches the external interrupt sense configuration.

Value	Description
0	Wake-up from the EXTINTx pin is disabled.
1	Wake-up from the EXTINTx pin is enabled.

© 2025 Microchip Technology Inc. and its subsidiaries

17.7.10. Configuration n

Name: CONFIGn
Offset: 0x18 + n*0x04 [n=0..1]
Reset: 0x00000000
Property: Write-Protected

Table 17-13. Register Bit Attribute Legend

Symbol	Description	Symbol	Description	Symbol	Description
R	Readable bit	**HC**	Cleared by Hardware	(Grey cell)	Unimplemented
W	Writable bit	**HS**	Set by Hardware	**X**	Bit is unknown at Reset
K	Write to clear	**S**	Software settable bit	—	—

Bit	31	30	29	28	27	26	25	24
	FILTEN7	SENSE7[2:0]			FILTEN6	SENSE6[2:0]		
Access	RW	RW	RW	RW	RW	RW	RW	RW
Reset	0	0	0	0	0	0	0	0

Bit	23	22	21	20	19	18	17	16
	FILTEN5	SENSE5[2:0]			FILTEN4	SENSE4[2:0]		
Access	RW	RW	RW	RW	RW	RW	RW	RW
Reset	0	0	0	0	0	0	0	0

Bit	15	14	13	12	11	10	9	8
	FILTEN3	SENSE3[2:0]			FILTEN2	SENSE2[2:0]		
Access	RW	RW	RW	RW	RW	RW	RW	RW
Reset	0	0	0	0	0	0	0	0

Bit	7	6	5	4	3	2	1	0
	FILTEN1	SENSE1[2:0]			FILTEN0	SENSE0[2:0]		
Access	RW	RW	RW	RW	RW	RW	RW	RW
Reset	0	0	0	0	0	0	0	0

Bits 3, 7, 11, 15, 19, 23, 27, 31 – FILTENx Filter x Enable [x=7..0]

0:	Filter is disabled for EXTINT[n*8+x] input.
1:	Filter is enabled for EXTINT[n*8+x] input.

Bits 0:2, 4:6, 8:10, 12:14, 16:18, 20:22, 24:26, 28:30 – SENSEx Input Sense x Configuration [x=7..0]

SENSEx[2:0]	Name	Description
0x0	NONE	No detection
0x1	RISE	Rising-edge detection
0x2	FALL	Falling-edge detection
0x3	BOTH	Both-edges detection
0x4	HIGH	High-level detection
0x5	LOW	Low-level detection
0x6-0x7		Reserved

Notes:

1. FILTEN7-FILTEN0 bits and SENSE7[2:0]-SENSE0[2:0] bitfields in CONFIG0 register belong to External Interrupt 7 to 0.
2. FILTEN7-FILTEN0 bits and SENSE7[2:0]-SENSE0[2:0] bitfields in CONFIG1 register belong to External Interrupt 15 to 8.

© 2025 Microchip Technology Inc. and its subsidiaries

18. Nonvolatile Memory Controller (NVMCTRL)

18.1. Overview

Non-volatile Memory (NVM) is a reprogrammable Flash memory that retains program and data storage even with power off. It embeds a main array and a separate smaller Read While Write EEPROM Emulation array (RWWEE Emulation) that can be programmed while reading the main array (RWWEE stands for Read (the main array) while Write (the EEPROM Emulation)). The NVM Controller (NVMCTRL) connects to the AHB and APB bus interfaces for system access to the NVM block. The AHB interface is used for reads and writes to the NVM block, while the APB interface is used for commands and configuration.

18.2. Features

- 32-bit AHB interface for reads and writes
- All NVM sections are memory mapped to the AHB, including calibration and system configuration
- 32-bit APB interface for commands and control
- Programmable wait states for read optimization
- 16 regions can be individually protected or unprotected
- Additional protection for boot loader
- Supports device protection through a security bit
- Interface to Power Manager for power-down of Flash blocks in sleep modes
- Can optionally wake up on exit from sleep or on first access
- Direct-mapped cache

Note: A register with property "Enable-Protected" may contain bits that are *not* enable-protected.

18.3. Block Diagram

Figure 18-1. Block Diagram

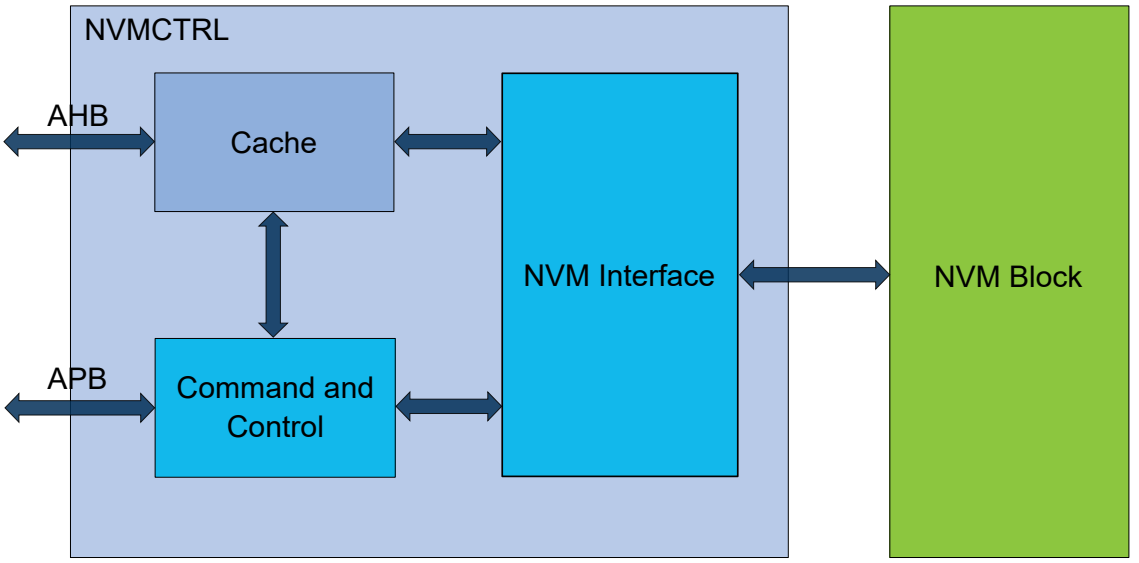

18.4. Signal Description

Not applicable.

© 2025 Microchip Technology Inc. and its subsidiaries

18.5. Peripheral Dependencies

Table 18-1. Peripherals Configuration Summary

Peripheral Name	Base Address	IRQ Line	AHB Clock		APB Clock		Generic Clock	PAC		Events		
			Index	Enabled at Reset	Index	Enabled at Reset	Index	Index	Prot at Reset	User	Generator	SleepWalking
NVMCTRL	0x41004000	5	4	Y	2	Y		2	N			

18.5.1. Power Management

The NVMCTRL will continue to operate in any Sleep mode where the selected source clock is running. The NVMCTRL interrupts can be used to wake-up the device from Sleep modes.

The Power Manager will automatically put the NVM block into a Low-power state when entering Sleep mode. This is based on the Control B register SLEEPPRM bit setting. (Refer to the CTRLB.SLEEPPRM register description for more details.) The NVM block goes into Low-power mode automatically when the device enters STANDBY mode regardless of SLEEPPRM. The NVM Page Buffer is lost when the NVM goes into Low-power mode, so a write command must be issued prior entering the NVM Low-power mode. NVMCTRL SLEEPPRM can be disabled to avoid such loss when the CPU goes into sleep except if the device goes into STANDBY mode for which there is no way to retain the Page Buffer.

18.5.2. Clocks

Two synchronous clocks are used by the NVMCTRL. One is provided by the AHB bus (CLK_NVMCTRL_AHB) and the other is provided by the APB bus (CLK_NVMCTRL_APB). For higher system frequencies, a programmable number of wait states can be used to optimize performance. When changing the AHB bus frequency, the user must ensure that the NVM Controller is configured with the proper number of wait states. Refer to the Electrical Characteristics for the exact number of wait states to be used for a particular frequency range.

18.5.3. Interrupts

The NVM Controller interrupt request line is connected to the interrupt controller. Using the NVMCTRL interrupt requires the interrupt controller to be programmed first.

18.5.4. Debug Operation

When an external debugger forces the CPU into Debug mode, the peripheral continues normal operation.

Access to the NVM block can be protected by the Security bit. In this case, the NVM block will not be accessible. See the section on the NVMCTRL Security Bit for details.

18.5.5. Register Access Protection

All registers with write-access are optionally write-protected by the Peripheral Access Controller (PAC), except the following registers:

- Interrupt Flag Status and Clear register (INTFLAG)

Optional write protection by the Peripheral Access Controller (PAC) is denoted by the "PAC Write Protection" property in each individual register description.

18.5.6. Analog Connections

Not applicable.

© 2025 Microchip Technology Inc. and its subsidiaries

18.6. Functional Description

18.6.1. Principle of Operation

The NVM Controller is a client on the AHB and APB buses. It responds to commands, read requests and write requests, based on user configuration.

18.6.1.1. Initialization

After power-up, the NVM Controller goes through a power-up sequence. During this time, access to the NVM Controller from the AHB bus is halted. Upon power-up completion, the NVM Controller is operational without any need for user configuration.

18.6.2. Memory Organization

Refer to the Physical Memory Map for memory sizes and addresses for each device.

The NVM is organized into rows, where each row contains four pages, as shown in the figure below. The NVM has a row-erase granularity, while the write granularity is by page. In other words, a single row erase will erase all four pages in the row, while four write operations are used to write the complete row.

Figure 18-2. NVM Row Organization

Row n	Page (n*4) + 3	Page (n*4) + 2	Page (n*4) + 1	Page (n*4) + 0

The NVM block contains a calibration and auxiliary space. Refer to the NVM Organization figure below for details.

The calibration and auxiliary space contains factory calibration and system configuration information. These spaces can be read from the AHB bus in the same way as the main NVM main address space.

In addition, a boot loader section can be allocated at the beginning of the main array, and an EEPROM Emulation section can be allocated at the end of the NVM main address space.

© 2025 Microchip Technology Inc. and its subsidiaries

Figure 18-3. NVM Memory Organization

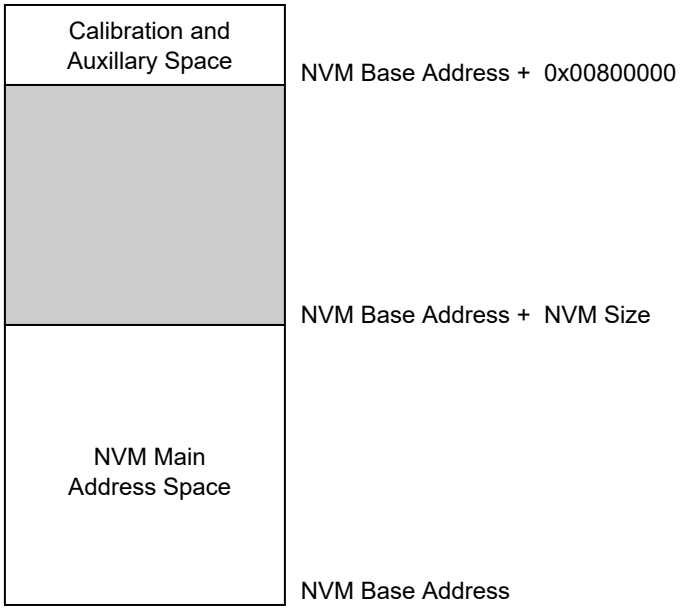

The lower rows in the NVM main address space can be allocated as a boot loader section by using the BOOTPROT fuses, and the upper rows can be allocated to EEPROM Emulation, as shown in the figure below.

The boot loader section is protected by the lock bit(s) corresponding to this address space and by the BOOTPROT[2:0] fuse. The EEPROM Emulation rows can be written regardless of the region lock status.

The number of rows protected by BOOTPROT is given in Boot Loader Size, the number of rows allocated to the EEPROM Emulation are given in EEPROM Size.

© 2025 Microchip Technology Inc. and its subsidiaries

Figure 18-4. EEPROM Emulation and Boot Loader Allocation

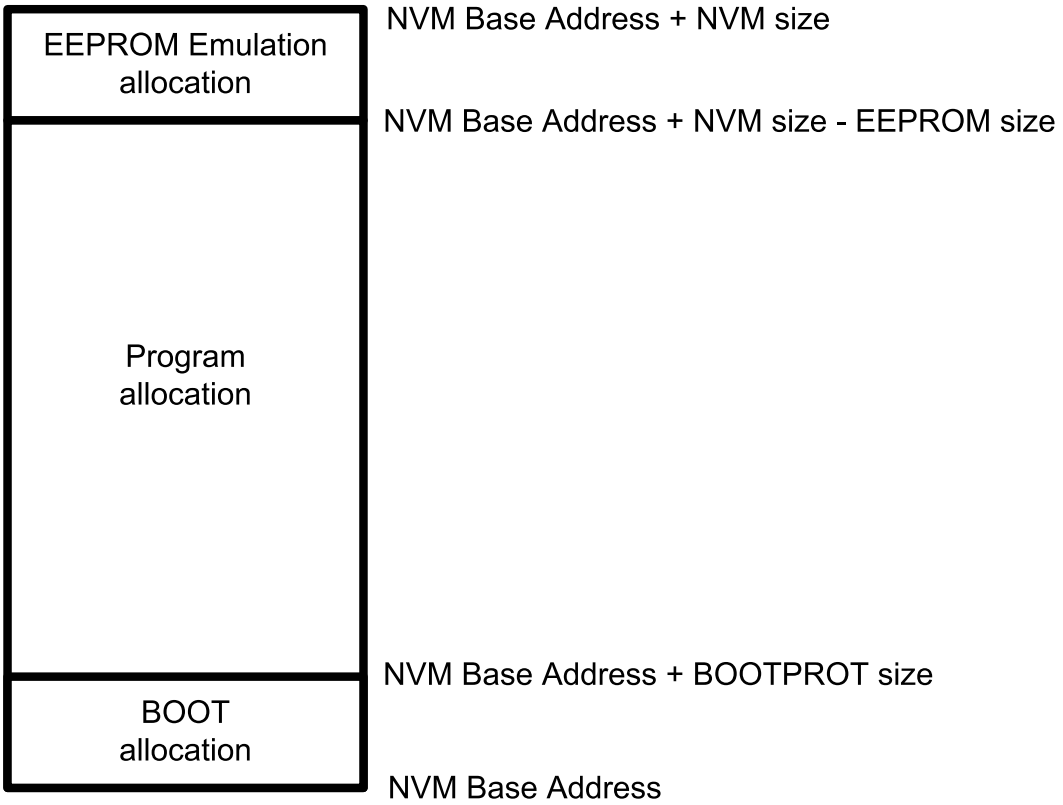

18.6.3. Region Lock Bits

The NVM block is grouped into 16 equally sized regions. The region size is dependent on the Flash memory size, and is given in the table below. Each region has a dedicated Lock bit preventing writing and erasing pages in the region. After production, all regions will be unlocked.

Table 18-2. Region Size

Memory Size [KB]	Region Size [KB]
256	16
128	8
64	4
32	2

To lock or unlock a region, the Lock Region and Unlock Region commands are provided. Writing one of these commands will temporarily lock/unlock the region containing the address loaded in the ADDR register. ADDR can be written by software, or the automatically loaded value from a write operation can be used. The new setting will stay in effect until the next Reset, or until the setting is changed again using the Lock and Unlock commands. The current status of the lock can be determined by reading the LOCK register.

To change the default lock/unlock setting for a region, the user configuration section of the auxiliary space must be written using the Write Auxiliary Page command. Writing to the auxiliary space will take effect after the next Reset. Therefore, a boot of the device is needed for changes in the lock/unlock setting to take effect. Refer to the Physical Memory Map for calibration and auxiliary space address mapping.

© 2025 Microchip Technology Inc. and its subsidiaries

18.6.4. Command and Data Interface

The NVM Controller is addressable from the APB bus, while the NVM main address space is addressable from the AHB bus. Read and automatic page write operations are performed by addressing the NVM main address space directly, while other operations such as manual page writes and row erases must be performed by issuing commands through the NVM Controller.

When performing a write operation the flash will be stalled during the whole operation. If running code from the flash, the next instruction will not be executed until after the operation has completed.

To issue a command, the CTRLA.CMD bits must be written along with the CTRLA.CMDEX value. When a command is issued, INTFLAG.READY will be cleared until the command has completed. Any commands written while INTFLAG.READY is low will be ignored.

The CTRLB register must be used to control the power reduction mode, read wait states, and the write mode.

18.6.4.1. NVM Read

Reading from the NVM main address space is performed via the AHB bus by addressing the NVM main address space or auxiliary address space directly. Read data is available after the configured number of read wait states (CTRLB.RWS) set in the NVM Controller.

The number of cycles data are delayed to the AHB bus is determined by the read wait states. Examples of using zero and one wait states are shown in Figure Read Wait State Examples below.

Reading the NVM main address space while a programming or erase operation is ongoing on the NVM main array results in an AHB bus stall until the end of the operation.

Figure 18-5. Read Wait State Examples

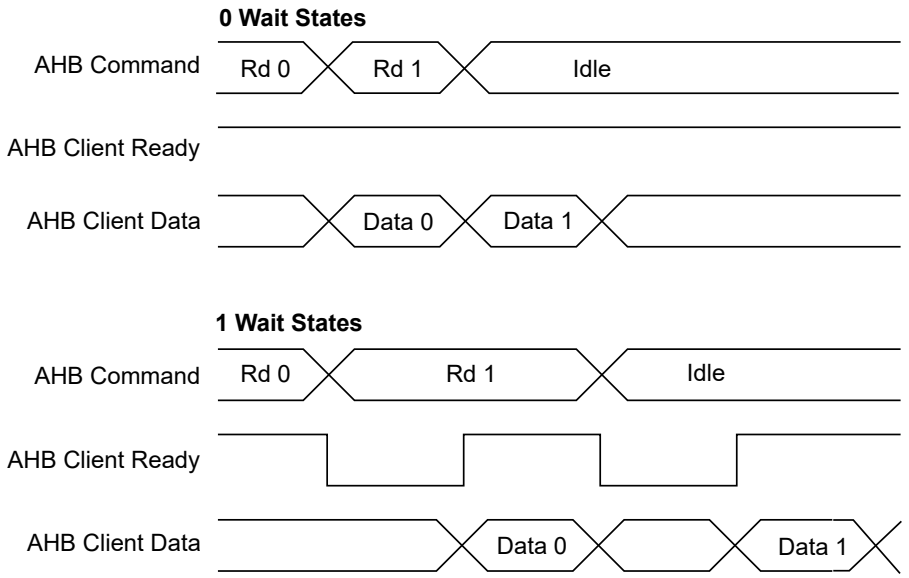

18.6.4.2. NVM Write

The NVM Controller requires that an erase must be done before programming. The entire NVM main address space can be erased by a debugger Chip Erase command. Alternatively, rows can be individually erased by the Erase Row command.

After programming the NVM main array, the region that the page resides in can be locked to prevent spurious write or erase sequences. Locking is performed on a per-region basis, and so, locking a region will lock all pages inside the region.

© 2025 Microchip Technology Inc. and its subsidiaries

Data to be written to the NVM block are first written to and stored in an internal buffer called the *page buffer*. The page buffer contains the same number of bytes as an NVM page. Writes to the page buffer must be 16 or 32 bits. 8-bit writes to the page buffer are not allowed and will cause a system exception.

Writing to the NVM block via the AHB bus is performed by a load operation to the page buffer. For each AHB bus write, the address is stored in the ADDR register. After the page buffer has been loaded with the required number of bytes, the page can be written to the NVM main array by setting CTRLA.CMD to 'Write Page' and setting the key value to CMDEX. The LOAD bit in the STATUS register indicates whether the page buffer has been loaded or not. Before writing the page to memory, the accessed row must be erased.

Automatic page writes are enabled by writing the manual write bit to zero (CTRLB.MANW=0). This will trigger a write operation to the page addressed by ADDR when the last location of the page is written.

Because the address is automatically stored in ADDR during the I/O bus write operation, the last given address will be present in the ADDR register. There is no need to load the ADDR register manually, unless a different page in memory is to be written.

18.6.4.2.1. Procedure for Manual Page Writes (CTRLC.MANW=1)

The row to be written to must be erased before the write command is given.

- Write to the page buffer by addressing the NVM main address space directly
- Write the page buffer to memory: CTRL.CMD='Write Page' and CMDEX
- The READY bit in the INTFLAG register will be low while programming is in progress, and access through the AHB will be stalled

18.6.4.2.2. Procedure for Automatic Page Writes (CTRLC.MANW=0)

The row to be written to must be erased before the last write to the page buffer is performed.

Note that partially written pages must be written with a manual write.

- Write to the page buffer by addressing the NVM main address space directly.
  When the last location in the page buffer is written, the page is automatically written to NVM main address space.
- INTFLAG.READY will be zero while programming is in progress and access through the AHB will be stalled.

18.6.4.3. Page Buffer Clear

The page buffer is automatically set to all '1' after a page write is performed. If a partial page has been written and it is desired to clear the contents of the page buffer. The Page Buffer Clear command can be used.

18.6.4.4. Erase Row

Before a page can be written, the row containing that page must be erased. The Erase Row command can be used to erase the desired row in the NVM main address space. Erasing the row sets all bits to '1'. If the row resides in a region that is locked, the erase will not be performed and the Lock Error bit in the Status register (STATUS.LOCKE) will be set.

18.6.4.4.1. Procedure for Erase Row

- Write the address of the row to erase to ADDR. Any address within the row can be used.
- Issue an Erase Row command.

Note: The NVM Address bit field in the Address register (ADDR.ADDR) uses 16-bit addressing.

18.6.4.5. Lock and Unlock Region

These commands are used to lock and unlock regions as detailed in section Region Lock Bits.

© 2025 Microchip Technology Inc. and its subsidiaries

18.6.4.6. Set and Clear Power Reduction Mode

The NVM Controller and block can be taken in and out of Power Reduction mode through the Set and Clear Power Reduction Mode commands. When the NVM Controller and block are in Power Reduction mode, the Power Reduction Mode bit in the Status register (STATUS.PRM) is set.

18.6.5. NVM User Configuration

The NVM user configuration resides in the auxiliary space. Refer to the Physical Memory Map of the device for calibration and auxiliary space address mapping.

The bootloader resides in the main array starting at offset zero. The allocated boot loader section is write-protected.

Table 18-3. Boot Loader Size

BOOTPROT [2:0]	Rows Protected by BOOTPROT	Boot Loader Size in Bytes
0x7(1)	None	0
0x6	2	512
0x5	4	1024
0x4	8	2048
0x3	16	4096
0x2	32	8192
0x1	64	16384
0x0	128	32768

Note:

1. Default value is 0x7 for all variants.

The EEPROM[2:0] bits indicate the EEPROM Emulation size, see the table below. The EEPROM Emulation resides in the upper rows of the NVM main address space and is writable, regardless of the region lock status.

Table 18-4. EEPROM Emulation Size

EEPROM[2:0]	Rows Allocated to EEPROM Emulation	EEPROM Emulation Size in Bytes
7	None	0
6	1	256
5	2	512
4	4	1024
3	8	2048
2	16	4096
1	32	8192
0	64	16384

18.6.6. Security Bit

The security bit allows the entire chip to be locked from external access for code security. The security bit can be written by a dedicated command, Set Security Bit (SSB). Once set, the only way to clear the security bit is through a debugger Chip Erase command. After issuing the SSB command, the PROGE error bit can be checked.

In order to increase the security level it is recommended to enable the internal BOD33 when the Security bit is set.

18.6.7. Cache

The NVM Controller cache reduces the device power consumption and improves system performance when wait states are required. Only the NVM main array address space is cached.

© 2025 Microchip Technology Inc. and its subsidiaries

It is a direct-mapped cache that implements . NVM Controller cache can be enabled by writing a '0' to the Cache Disable bit in the Control B register (CTRLB.CACHEDIS).

The cache can be configured to three different modes using the Read Mode bit group in the Control B register (CTRLB.READMODE).

The INVALL command can be issued using the Command bits in the Control A register to invalidate all cache lines (CTRLA.CMD=INVALL). Commands affecting NVM content automatically invalidate cache lines.

© 2025 Microchip Technology Inc. and its subsidiaries

18.7. Register Summary

Offset	Name	Bit Pos.	7	6	5	4	3	2	1	0
0x00	CTRLA	7:0		CMD[6:0]						
		15:8	CMDEX[7:0]							
0x02 ... 0x03	Reserved									
0x04	CTRLB	7:0	MANW			RWS[3:0]				
		15:8							SLEEPPRM[1:0]	
		23:16							READMODE[1:0]	
		31:24								
0x08	PARAM	7:0	NVMP[7:0]							
		15:8	NVMP[15:8]							
		23:16						PSZ[2:0]		
		31:24								
0x0C	INTENCLR	7:0							ERROR	READY
0x0D ... 0x0F	Reserved									
0x10	INTENSET	7:0							ERROR	READY
0x11 ... 0x13	Reserved									
0x14	INTFLAG	7:0							ERROR	READY
0x15 ... 0x17	Reserved									
0x18	STATUS	7:0				NVME	LOCKE	PROGE	LOAD	PRM
		15:8								SB
0x1A ... 0x1B	Reserved									
0x1C	ADDR	7:0	ADDR[7:0]							
		15:8	ADDR[15:8]							
		23:16			ADDR[21:16]					
		31:24								
0x20	LOCK	7:0	LOCK[7:0]							
		15:8	LOCK[15:8]							

© 2025 Microchip Technology Inc. and its subsidiaries

18.7.1. Control A

Name: CTRLA
Offset: 0x00
Reset: 0x0000
Property: PAC Write-Protection

Table 18-5. Register Bit Attribute Legend

Symbol	Description	Symbol	Description	Symbol	Description
R	Readable bit	**HC**	Cleared by Hardware	(Grey cell)	Unimplemented
W	Writable bit	**HS**	Set by Hardware	**X**	Bit is unknown at Reset
K	Write to clear	**S**	Software settable bit	—	—

Bit	15	14	13	12	11	10	9	8
	CMDEX[7:0]							
Access	R/W	R/W	R/W	R/W	R/W	R/W	R/W	R/W
Reset	0	0	0	0	0	0	0	0

Bit	7	6	5	4	3	2	1	0
		CMD[6:0]						
Access		R/W	R/W	R/W	R/W	R/W	R/W	R/W
Reset		0	0	0	0	0	0	0

Bits 15:8 – CMDEX[7:0] Command Execution

When this bit group is written to the key value 0xA5, the command written to CMD will be executed. If a value different from the key value is tried, the write will not be performed and the Programming Error bit in the Status register (STATUS.PROGE) will be set. PROGE is also set if a previously written command is not completed yet.
The key value must be written at the same time as CMD. If a command is issued through the APB bus on the same cycle as an AHB bus access, the AHB bus access will be given priority. The command will then be executed when the NVM block and the AHB bus are idle.
INTFLAG.READY must be '1' when the command is issued.
Bit 0 of the CMDEX bit group will read back as '1' until the command is issued.
Note: The NVM Address bit field in the Address register (ADDR.ADDR) uses 16-bit addressing.

Bits 6:0 – CMD[6:0] Command

These bits define the command to be executed when the CMDEX key is written.

CMD[6:0]	Group Configuration	Description
0x00-0x01	-	Reserved
0x02	ER	Erase Row - Erases the row addressed by the ADDR register in the NVM main array.
0x03	-	Reserved
0x04	WP	Write Page - Writes the contents of the page buffer to the page addressed by the ADDR register.
0x05	EAR	Erase Auxiliary Row - Erases the auxiliary row addressed by the ADDR register. This command can be given only when the security bit is not set and only to the User Configuration Row.
0x06	WAP	Write Auxiliary Page - Writes the contents of the page buffer to the page addressed by the ADDR register. This command can be given only when the security bit is not set and only to the User Configuration Row.
0x07-0x3F	-	Reserved
0x40	LR	Lock Region - Locks the region containing the address location in the ADDR register.
0x41	UR	Unlock Region - Unlocks the region containing the address location in the ADDR register.
0x42	SPRM	Sets the Power Reduction Mode.
0x43	CPRM	Clears the Power Reduction Mode.

© 2025 Microchip Technology Inc. and its subsidiaries

CMD (continued)		
CMD[6:0]	**Group Configuration**	**Description**
0x44	PBC	Page Buffer Clear - Clears the page buffer.
0x45	SSB	Set Security Bit - Sets the security bit by writing 0x00 to the first byte in the lockbit row.
0x46	INVALL	Invalidates all cache lines.
0x47-0x7F	-	Reserved

© 2025 Microchip Technology Inc. and its subsidiaries

18.7.2. Control B

Name: CTRLB
Offset: 0x04
Reset: 0x00000080
Property: PAC Write-Protection

Table 18-6. Register Bit Attribute Legend

Symbol	Description	Symbol	Description	Symbol	Description
R	Readable bit	**HC**	Cleared by Hardware	(Grey cell)	Unimplemented
W	Writable bit	**HS**	Set by Hardware	**X**	Bit is unknown at Reset
K	Write to clear	**S**	Software settable bit	—	—

Bit	31	30	29	28	27	26	25	24
Access								
Reset								

Bit	23	22	21	20	19	18	17	16
							READMODE[1:0]	
Access							R/W	R/W
Reset							0	0

Bit	15	14	13	12	11	10	9	8
							SLEEPPRM[1:0]	
Access							R/W	R/W
Reset							0	0

Bit	7	6	5	4	3	2	1	0
	MANW			RWS[3:0]				
Access	R/W			R/W	R/W	R/W	R/W	
Reset	1			0	0	0	0	

Bits 17:16 – READMODE[1:0] NVMCTRL Read Mode

Value	Name	Description
0x0	NO_MISS_PENALTY	The NVM Controller (cache system) does not insert Wait states on a cache miss. Gives the best system performance.
0x1	LOW_POWER	Reduces power consumption of the cache system, but inserts a Wait state each time there is a cache miss. This mode may not be relevant if CPU performance is required, as the application will be stalled and may lead to increased run time.
0x2	DETERMINISTIC	The cache system ensures that a cache hit or miss takes the same amount of time, determined by the number of programmed Flash Wait states. This mode can be used for real-time applications that require deterministic execution timings.
0x3	Reserved	

Bits 9:8 – SLEEPPRM[1:0] Power Reduction mode during Sleep
Indicates the Power Reduction mode during sleep.

Value	Name	Description
0x0	WAKEUPACCESS	NVM block enters Low-Power mode when entering sleep. NVM block exits Low-Power mode upon first access.
0x1	WAKEUPINSTANT	NVM block enters Low-Power mode when entering sleep. NVM block exits Low-Power mode when exiting sleep.
0x2	Reserved	

© 2025 Microchip Technology Inc. and its subsidiaries

Value	Name	Description
0x3	DISABLED	Auto power reduction disabled.

Bit 7 – MANW Manual Write

Note: Set MANW in the NVM.CTRLB to 1 at startup.

Note that reset value of this bit is '1'.

Value	Description
0	Writing to the last word in the page buffer will initiate a write operation to the page addressed by the last write operation. This includes writes to memory and auxiliary rows.
1	Write commands must be issued through the CTRLA.CMD register.

Bits 4:1 – RWS[3:0] NVM Read Wait States

These bits control the number of Wait states for a read operation. '0' indicates zero Wait states, '1' indicates one wait state, etc., up to 15 wait states.
This register is initialized to 0 wait states. Software can change this value based on the NVM access time and system frequency.

© 2025 Microchip Technology Inc. and its subsidiaries

18.7.3. NVM Parameter

Name: PARAM
Offset: 0x08
Reset: 0x000XXXXX
Property: PAC Write-Protection

Table 18-7. Register Bit Attribute Legend

Symbol	Description	Symbol	Description	Symbol	Description
R	Readable bit	**HC**	Cleared by Hardware	(Grey cell)	Unimplemented
W	Writable bit	**HS**	Set by Hardware	**X**	Bit is unknown at Reset
K	Write to clear	**S**	Software settable bit	—	—

Bit	31	30	29	28	27	26	25	24
Access								
Reset								

Bit	23	22	21	20	19	18	17	16
						PSZ[2:0]		
Access						R	R	R
Reset						x	x	x

Bit	15	14	13	12	11	10	9	8
	NVMP[15:8]							
Access	R	R	R	R	R	R	R	R
Reset	x	x	x	x	x	x	x	x

Bit	7	6	5	4	3	2	1	0
	NVMP[7:0]							
Access	R	R	R	R	R	R	R	R
Reset	x	x	x	x	x	x	x	x

Bits 18:16 – PSZ[2:0] Page Size
Indicates the page size. Not all devices of the device families will provide all the page sizes indicated in the table.

Value	Name	Description
0x0	8	8 bytes
0x1	16	16 bytes
0x2	32	32 bytes
0x3	64	64 bytes
0x4	128	128 bytes
0x5	256	256 bytes
0x6	512	512 bytes
0x7	1024	1024 bytes

Bits 15:0 – NVMP[15:0] NVM Pages
Indicates the number of pages in the NVM main address space.

© 2025 Microchip Technology Inc. and its subsidiaries

18.7.4. Interrupt Enable Clear

Name: INTENCLR
Offset: 0x0C
Reset: 0x00
Property: PAC Write-Protection

This register allows the user to disable an interrupt without doing a read-modify-write operation. Changes in this register will also be reflected in the Interrupt Enable Set register (INTENSET).

Table 18-8. Register Bit Attribute Legend

Symbol	Description	Symbol	Description	Symbol	Description
R	Readable bit	**HC**	Cleared by Hardware	(Grey cell)	Unimplemented
W	Writable bit	**HS**	Set by Hardware	**X**	Bit is unknown at Reset
K	Write to clear	**S**	Software settable bit	—	—

Bit	7	6	5	4	3	2	1	0
							ERROR	READY
Access							R/W	R/W
Reset							0	0

Bit 1 – ERROR Error Interrupt Enable
Writing a '0' to this bit has no effect.
Writing a '1' to this bit clears the ERROR interrupt enable.
This bit will read as the current value of the ERROR interrupt enable.

Bit 0 – READY NVM Ready Interrupt Enable
Writing a '0' to this bit has no effect.
Writing a '1' to this bit clears the READY interrupt enable.
This bit will read as the current value of the READY interrupt enable.

© 2025 Microchip Technology Inc. and its subsidiaries

18.7.5. Interrupt Enable Set

Name: INTENSET
Offset: 0x10
Reset: 0x00
Property: PAC Write-Protection

This register allows the user to enable an interrupt without doing a read-modify-write operation. Changes in this register will also be reflected in the Interrupt Enable Clear register (INTENCLR).

Table 18-9. Register Bit Attribute Legend

Symbol	Description	Symbol	Description	Symbol	Description
R	Readable bit	**HC**	Cleared by Hardware	(Grey cell)	Unimplemented
W	Writable bit	**HS**	Set by Hardware	**X**	Bit is unknown at Reset
K	Write to clear	**S**	Software settable bit	—	—

Bit	7	6	5	4	3	2	1	0
							ERROR	READY
Access							R/W	R/W
Reset							0	0

Bit 1 – ERROR Error Interrupt Enable
Writing a '0' to this bit has no effect.
Writing a '1' to this bit sets the ERROR interrupt enable.
This bit will read as the current value of the ERROR interrupt enable.

Bit 0 – READY NVM Ready Interrupt Enable
Writing a '0' to this bit has no effect.
Writing a '1' to this bit sets the READY interrupt enable.
This bit will read as the current value of the READY interrupt enable.

© 2025 Microchip Technology Inc. and its subsidiaries

18.7.6. Interrupt Flag Status and Clear

Name: INTFLAG
Offset: 0x14
Reset: 0x00
Property: –

Table 18-10. Register Bit Attribute Legend

Symbol	Description	Symbol	Description	Symbol	Description
R	Readable bit	**HC**	Cleared by Hardware	(Grey cell)	Unimplemented
W	Writable bit	**HS**	Set by Hardware	**X**	Bit is unknown at Reset
K	Write to clear	**S**	Software settable bit	—	—

Bit	7	6	5	4	3	2	1	0
							ERROR	READY
Access							R/W	R
Reset							0	0

Bit 1 – ERROR Error

This flag is set on the occurrence of an NVME, LOCKE or PROGE error.
This bit can be cleared by writing a '1' to its bit location.

Value	Description
0	No errors have been received since the last clear.
1	At least one error has occurred since the last clear.

Bit 0 – READY NVM Ready

Value	Description
0	The NVM controller is busy programming or erasing.
1	The NVM controller is ready to accept a new command.

© 2025 Microchip Technology Inc. and its subsidiaries

18.7.7. Status

Name: STATUS
Offset: 0x18
Reset: 0x0X00
Property: –

Table 18-11. Register Bit Attribute Legend

Symbol	Description	Symbol	Description	Symbol	Description
R	Readable bit	**HC**	Cleared by Hardware	(Grey cell)	Unimplemented
W	Writable bit	**HS**	Set by Hardware	**X**	Bit is unknown at Reset
K	Write to clear	**S**	Software settable bit	—	—

Bit	15	14	13	12	11	10	9	8
								SB
Access								R
Reset								x

Bit	7	6	5	4	3	2	1	0
				NVME	LOCKE	PROGE	LOAD	PRM
Access				R/W	R/W	R/W	R/W	R
Reset				0	0	0	0	0

Bit 8 – SB Security Bit Status

Value	Description
0	The Security bit is inactive.
1	The Security bit is active.

Bit 4 – NVME NVM Error

This bit can be cleared by writing a '1' to its bit location.

Value	Description
0	No programming or erase errors have been received from the NVM controller since this bit was last cleared.
1	At least one error has been registered from the NVM controller since this bit was last cleared.

Bit 3 – LOCKE Lock Error Status

This bit can be cleared by writing a '1' to its bit location.

Value	Description
0	No programming of any locked lock region has happened since this bit was last cleared.
1	Programming of at least one locked lock region has happened since this bit was last cleared.

Bit 2 – PROGE Programming Error Status

This bit can be cleared by writing a '1' to its bit location.

Value	Description
0	No invalid commands or bad keywords were written in the NVM Command register since this bit was last cleared.
1	An invalid command and/or a bad keyword was/were written in the NVM Command register since this bit was last cleared.

© 2025 Microchip Technology Inc. and its subsidiaries

Bit 1 – LOAD NVM Page Buffer Active Loading

This bit indicates that the NVM page buffer has been loaded with one or more words. Immediately after an NVM load has been performed, this flag is set. It remains set until a page write or a page buffer clear (PBCLR) command is given.
This bit can be cleared by writing a '1' to its bit location.

Bit 0 – PRM Power Reduction mode

This bit indicates the current NVM power reduction state. The NVM block can be set in Power Reduction mode in two ways: through the command interface or automatically when entering sleep with SLEEPPRM set accordingly.
PRM can be cleared in three ways: through AHB access to the NVM block, through the command interface (SPRM and CPRM) or when exiting sleep with SLEEPPRM set accordingly.

Value	Description
0	NVM is not in Power Reduction mode.
1	NVM is in Power Reduction mode.

© 2025 Microchip Technology Inc. and its subsidiaries

18.7.8. Address

Name: ADDR
Offset: 0x1C
Reset: 0x00000000
Property: PAC Write-Protection

Table 18-12. Register Bit Attribute Legend

Symbol	Description	Symbol	Description	Symbol	Description
R	Readable bit	**HC**	Cleared by Hardware	(Grey cell)	Unimplemented
W	Writable bit	**HS**	Set by Hardware	**X**	Bit is unknown at Reset
K	Write to clear	**S**	Software settable bit	—	—

Bit	31	30	29	28	27	26	25	24
Access								
Reset								

Bit	23	22	21	20	19	18	17	16
			ADDR[21:16]					
Access			R/W	R/W	R/W	R/W	R/W	R/W
Reset			0	0	0	0	0	0

Bit	15	14	13	12	11	10	9	8
	ADDR[15:8]							
Access	R/W	R/W	R/W	R/W	R/W	R/W	R/W	R/W
Reset	0	0	0	0	0	0	0	0

Bit	7	6	5	4	3	2	1	0
	ADDR[7:0]							
Access	R/W	R/W	R/W	R/W	R/W	R/W	R/W	R/W
Reset	0	0	0	0	0	0	0	0

Bits 21:0 – ADDR[21:0] NVM Address

ADDR drives the hardware half-word offset from the start address of the corresponding NVM section when a command is executed using CMDEX. This register is also automatically updated when writing to the page buffer. The effective address for the operation is Start address of the section + 2*ADDR.

Example:

For erasing the 3rd row in the Flash memory, spanning from 0x00000200 to 0x000002FF, ADDR must be written with the half-word offset address of any half-word within this range, that is any value between 0x100 and 0x17F.

© 2025 Microchip Technology Inc. and its subsidiaries

18.7.9. Lock Section

Name: LOCK
Offset: 0x20
Reset: 0xXXXX
Property: –

Table 18-13. Register Bit Attribute Legend

Symbol	Description	Symbol	Description	Symbol	Description
R	Readable bit	**HC**	Cleared by Hardware	(Grey cell)	Unimplemented
W	Writable bit	**HS**	Set by Hardware	**X**	Bit is unknown at Reset
K	Write to clear	**S**	Software settable bit	—	—

Bit	15	14	13	12	11	10	9	8
	LOCK[15:8]							
Access	R	R	R	R	R	R	R	R
Reset	x	x	x	x	x	x	x	x

Bit	7	6	5	4	3	2	1	0
	LOCK[7:0]							
Access	R	R	R	R	R	R	R	R
Reset	x	x	x	x	x	x	x	x

Bits 15:0 – LOCK[15:0] Region Lock Bits
To set or clear these bits, the CMD register must be used.
Default state after erase will be unlocked (0xFFFF).
Default state after reset will be loaded from the NVM User Row.

Value	Description
0	The corresponding lock region is locked.
1	The corresponding lock region is not locked.

© 2025 Microchip Technology Inc. and its subsidiaries

19. PORT - I/O Pin Controller

19.1. Overview

The I/O Pin Controller (PORT) controls the I/O pins of the device. The I/O pins are organized in a series of groups, collectively referred to as a PORT group. Each PORT group can have up to 32 pins that can be configured and controlled individually or as a group. The number of PORT groups on a device may depend on the package or number of pins. Each pin may either be used for general purpose I/O under direct application control or be assigned to an embedded device peripheral. When used for general purpose I/O, each pin can be configured as input or output, with a highly configurable driver and pull settings.

All I/O pins have true read-modify-write functionality when used for general purpose I/O. The direction or the output value of one or more pins may be changed (set, Reset or toggled) explicitly without unintentionally changing the state of any other pins in the same port group by a single, atomic 8-, 16- or 32-bit write.

The PORT is connected to the high-speed bus matrix through an AHB/APB bridge. The Pin Direction, Data Output Value and Data Input Value registers may also be accessed using the low-latency CPU local bus (IOBUS; ARM® single-cycle I/O port). . The Pin Direction, Data Output Value and Data Input Value registers may also be accessed using the low-latency CPU local bus (IOBUS; ARM single-cycle I/O port) .

19.2. Features

The following are key features of the PORT module:

- Selectable Input and Output Configuration for Each Individual Pin
- Software-controlled Multiplexing of Peripheral Functions on I/O Pins
- Flexible Pin Configuration Through a Dedicated Pin Configuration Register
- Configurable Output Driver and Pull Settings:
  - Totem-pole (push-pull)
  - Pull configuration
  - Driver strength
- Configurable Input Buffer and Pull Settings:
  - Internal pull up or pull down
  - Input sampling criteria
  - Input buffer can be disabled if not needed for low-power consumption

© 2025 Microchip Technology Inc. and its subsidiaries

19.3. Block Diagram

Figure 19-1. PORT Block Diagram

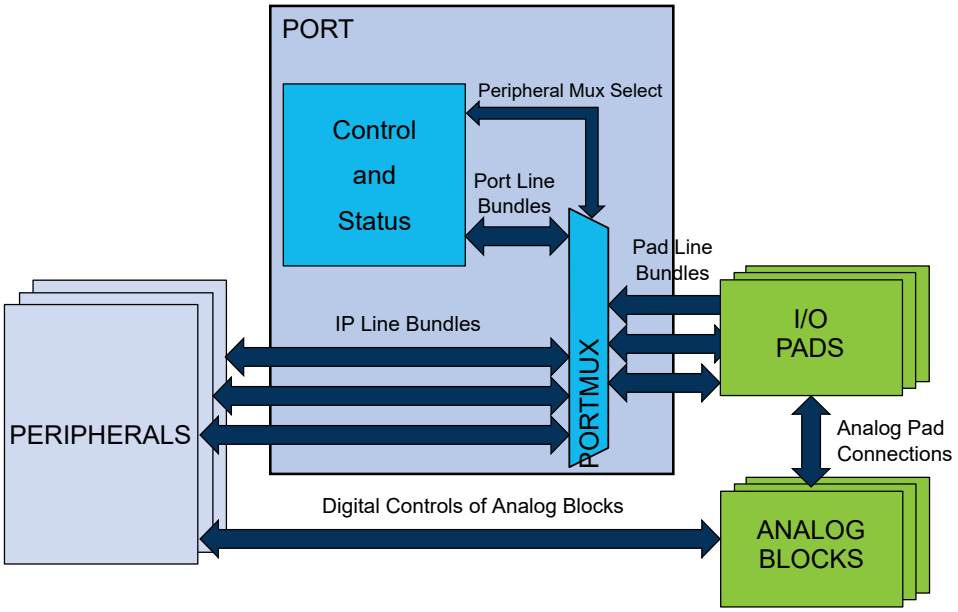

19.4. Signal Description

Table 19-1. Signal Description for PORT

Signal name	Type	Description
Pxy	Digital I/O	General purpose I/O pin y in group x

Refer to the *I/O Multiplexing and Considerations* for details on the pin mapping for this peripheral. One signal can be mapped on several pins.

19.5. Peripheral Dependencies

Table 19-2. Peripherals Configuration Summary

Peripheral Name	Base Address	IRQ Line	AHB Clock		APB Clock		Generic Clock	PAC		Events		
			Index	Enabled at Reset	Index	Enabled at Reset	Index	Index	Prot at Reset	User	Generator	SleepWalking
PORT	0x41004400				3	Y		3	N			

19.5.1. I/O Lines

The I/O lines of the PORT are mapped to pins of the physical device. The following naming scheme is used:

Each line bundle with up to 32 lines is assigned an identifier 'xy', with letter x=A, B, C... and two-digit number y=00, 01, ...31. Examples: A24, C03.

PORT pins are labeled 'Pxy' accordingly, for example PA24, PC03. This identifies each pin in the device uniquely.

Each pin may be controlled by one or more peripheral multiplexer settings, which allows the pad to be routed internally to a dedicated peripheral function. When the setting is enabled, the selected peripheral has control over the Output state of the pad, as well as the ability to read the current Physical Pad state. Refer to *I/O Multiplexing and Considerations* for details.

Device-specific configurations may cause some lines (and the corresponding Pxy pin) not to be implemented.

© 2025 Microchip Technology Inc. and its subsidiaries

19.5.2. Power Management

During Reset, all PORT lines are configured as inputs with input buffers, output buffers and pull disabled.

The PORT peripheral will continue operating in any Sleep mode where its source clock is running.

19.5.3. Clocks

The PORT bus clock (CLK_PORT_APB) can be enabled and disabled in the Power Manager, and the default state of CLK_PORT_APB can be found in the *Peripheral Clock Masking* section in *PM – Power Manager*.

The PORT requires an APB clock, which may be divided from the CPU main clock and allows the CPU to access the registers of PORT through the high-speed matrix and the AHB/APB bridge.

The PORT also requires an AHB clock for CPU AHBP accesses to the PORT, which have a higher priority than the APB accesses in case of concurrent PORT accesses. That AHB clock is the internal PORT clock.

The PORT also requires an AHB clock for CPU IOBUS accesses to the PORT. That AHB clock is the internal PORT clock.

The priority of IOBUS accesses is higher than APB accesses. One clock cycle latency can be observed on the APB access in case of concurrent PORT accesses.

19.5.4. Interrupts

The interrupt request line is connected to the Interrupt Controller. Using the PORT interrupts requires the interrupt controller to be configured first. Refer to Nested Vector Interrupt Controller for details.

19.5.5. Events

The events of this peripheral are connected to the Event System.

19.5.6. Debug Operation

When the CPU is halted in Debug mode, this peripheral will continue normal operation.

19.5.7. Register Access Protection

All registers with write-access are optionally write-protected by the Peripheral Access Controller (PAC), except for the following registers:

- Interrupt Flag (INTFLAG) register

Note: Optional write protection is indicated by the "PAC Write Protection" property in the register description.

Write protection does not apply for accesses through an external debugger.

19.5.8. Analog Connections

Analog functions are connected directly between the analog blocks and the I/O pads using analog buses. Selecting an analog peripheral function for a given pin will disable the corresponding digital features of the pad.

19.5.9. CPU Local Bus

The CPU local bus (IOBUS) is an interface that connects the CPU directly to the PORT. It is a single-cycle bus interface that does not support wait states. It supports 8-bit, 16-bit and 32-bit sizes.

This bus is generally used for low latency operation. The Data Direction (DIR) and Data Output Value (OUT) registers can be read, written, set, cleared or toggled using this bus, and the Data Input Value (IN) registers can be read.

© 2025 Microchip Technology Inc. and its subsidiaries

Since the IOBUS cannot wait for IN register resynchronization, the Control register (CTRL) must be configured to continuously sample all pins that need to be read via the IOBUS in order to prevent stale data from being read.

Note: Refer to the *Product Mapping* chapter for the IOBUS address.

19.6. Functional Description

Figure 19-2. Overview of the PORT

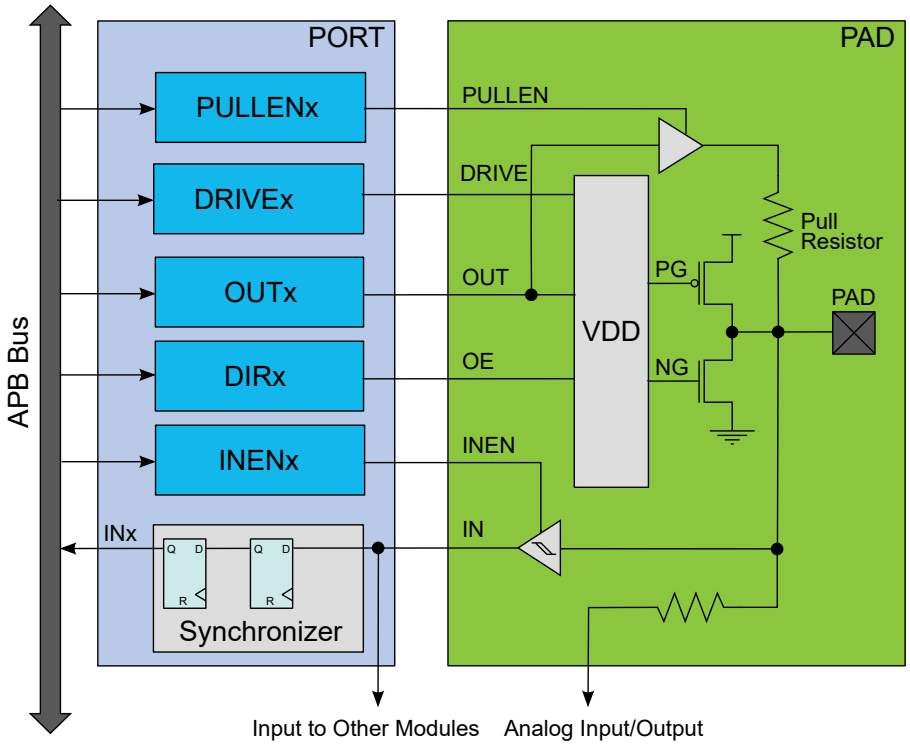

19.6.1. Principle of Operation

Each pin group of up to 32 pins is controlled by the registers in PORT, as described in the figure. These registers in PORT are duplicated for each pin group, with increasing base addresses.

© 2025 Microchip Technology Inc. and its subsidiaries

Figure 19-3. Overview of the peripheral functions multiplexing

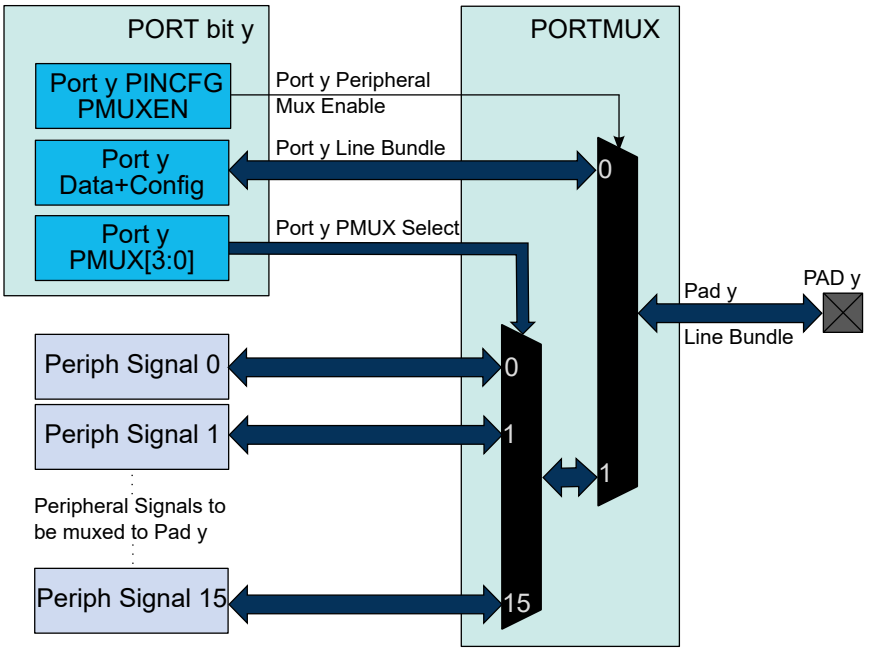

The I/O pins of the device are controlled by PORT peripheral registers. Each port pin has a corresponding bit in the Data Direction (DIR) and Data Output Value (OUT) registers to enable that pin as an output and to define the output state.

The direction of each pin in a pin group is configured by the DIR register. If a bit in DIR is set to '1', the corresponding pin is configured as an output pin. If a bit in DIR is set to '0', the corresponding pin is configured as an input pin.

When the direction is set as output, the corresponding bit in the OUT register will set the level of the pin. If bit y in OUT is written to '1', pin y is driven HIGH. If bit y in OUT is written to '0', pin y is driven LOW. Pin configuration can be set by Pin Configuration (PINCFGy) registers, with y=00, 01, ..31 representing the bit position.

The Data Input Value (IN) is set as the input value of a port pin with resynchronization to the PORT clock. To reduce power consumption, these input synchronizers are clocked only when system requires reading the input value. The value of the pin can always be read, whether the pin is configured as input or output. If the Input Enable bit in the Pin Configuration registers (PINCFGy.INEN) is '0', the input value will not be sampled.

In PORT, the Peripheral Multiplexer Enable bit in the PINCFGy register (PINCFGY.PMUXEN) can be written to '1' to enable the connection between peripheral functions and individual I/O pins. The Peripheral Multiplexing (PMUXn) registers select the peripheral function for the corresponding pin. This will override the connection between the PORT and that I/O pin, and connect the selected peripheral line particular pin to the pad instead of the PORT line bundle.

19.6.2. Basic Operation

19.6.2.1. Initialization

After reset, all standard function device I/O pads are connected to the PORT with outputs tri-stated and input buffers disabled, even if there is no clock running.

However, specific pins, such as those used for connection to a debugger, may be configured differently, as required by their special function.

© 2025 Microchip Technology Inc. and its subsidiaries

19.6.2.2. Operation

Each I/O pin Pxy can be controlled by the registers in PORT. Each PORT group x has its own set of PORT registers, with a base address at byte address (PORT + 0x80 * group index) (A corresponds to group index 0, B to 1, etc...). Within that set of registers, the pin index is y, from 0 to 31.

Refer to *I/O Multiplexing and Considerations* for details on available pin configuration and PORT groups.

Configuring Pins as Output

To use pin Pxy as an *output*, write bit y of the DIR register to '1'. This can also be done by writing bit y in the DIRSET register to '1' - this will avoid disturbing the configuration of other pins in that group. The y bit in the OUT register must be written to the desired output value.

Similarly, writing an OUTSET bit to '1' will set the corresponding bit in the OUT register to '1'. Writing a bit in OUTCLR to '1' will set that bit in OUT to zero. Writing a bit in OUTTGL to '1' will toggle that bit in OUT.

Configuring Pins as Input

To use pin Pxy as an *input*, bit y in the DIR register must be written to '0'. This can also be done by writing bit y in the DIRCLR register to '1' - this will avoid disturbing the configuration of other pins in that group. The input value can be read from bit y in register IN as soon as the INEN bit in the Pin Configuration register (PINCFGy.INEN) is written to '1'.

By default, the input synchronizer is clocked only when an input read is requested. This will delay the read operation by two cycles of the PORT clock. To remove the delay, the input synchronizers for each PORT group of eight pins can be configured to be always active, but this will increase power consumption. This is enabled by writing '1' to the corresponding SAMPLINGn bit field of the CTRL register, see CTRL.SAMPLING for details.

Using Alternative Peripheral Functions

To use pin Pxy as one of the available peripheral functions, the corresponding PMUXEN bit of the PINCFGy register must be '1'. The PINCFGy register for pin Pxy is at byte offset (PINCFG0 + y).

The peripheral function can be selected by setting the PMUXO or PMUXE in the PMUXn register. The PMUXO/PMUXE is at byte offset PMUX0 + (y/2). The chosen peripheral must also be configured and enabled.

19.6.3. I/O Pin Configuration

The Pin Configuration register (PINCFGy) is used for additional I/O pin configuration. A pin can be set in a totem-pole or pull configuration.

As pull configuration is done through the Pin Configuration register, all intermediate PORT states during switching of pin direction and pin values are avoided.

The I/O pin configurations are described further in this chapter, and summarized in Table 19-3.

19.6.3.1. Pin Configurations Summary

Table 19-3. Pin Configurations Summary

DIR	INEN	PULLEN	OUT	Configuration
0	0	0	X	Reset or analog I/O: all digital disabled
0	0	1	0	Pull-down; input buffer disabled
0	0	1	1	Pull-up; input buffer disabled
0	1	0	X	Input
0	1	1	0	Input with pull-down
0	1	1	1	Input with pull-up

© 2025 Microchip Technology Inc. and its subsidiaries

Table 19-3. Pin Configurations Summary (continued)

DIR	INEN	PULLEN	OUT	Configuration
1	0	X	X	Output; input buffer disabled
1	1	X	X	Output; input buffer enabled

19.6.3.2. Input Configuration

Figure 19-4. I/O configuration - Standard Input

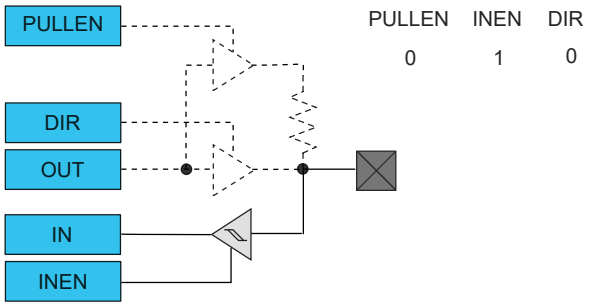

Figure 19-5. I/O Configuration - Input with Pull

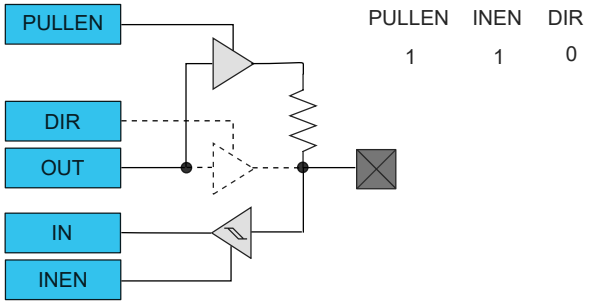

Note: When pull is enabled, the pull value is defined by the OUT value.

19.6.3.3. Totem-Pole Output

When configured for totem-pole (push-pull) output, the pin is driven low or high according to the corresponding bit setting in the OUT register. In this configuration there is no current limitation for sink or source other than what the pin is capable of. If the pin is configured for input, the pin will float if no external pull is connected.

Note: Enabling the output driver will automatically disable pull.

Figure 19-6. I/O Configuration - Totem-Pole Output with Disabled Input

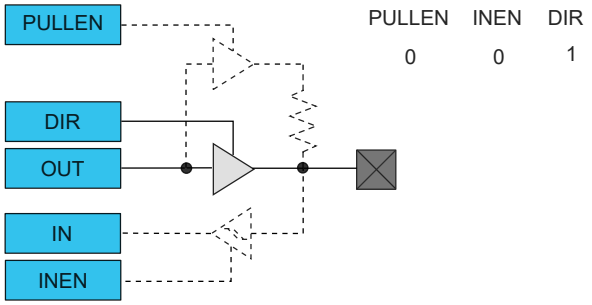

© 2025 Microchip Technology Inc. and its subsidiaries

Figure 19-7. I/O Configuration - Totem-Pole Output with Enabled Input

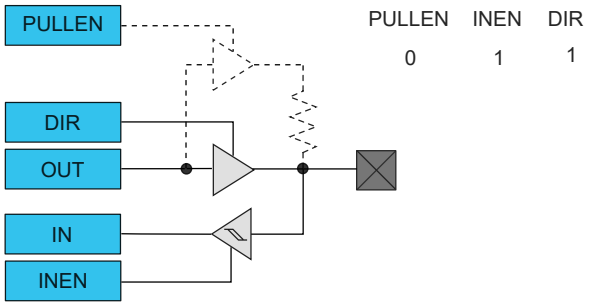

Figure 19-8. I/O Configuration - Output with Pull

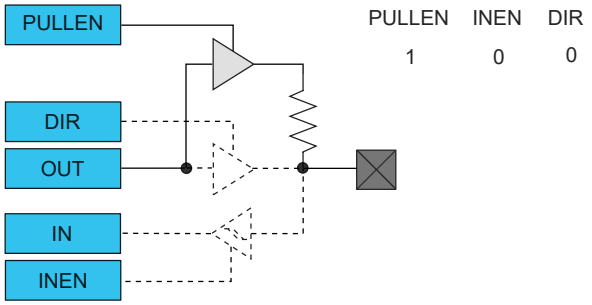

19.6.3.4. Digital Functionality Disabled

Neither Input nor Output functionality are enabled.

Figure 19-9. I/O Configuration - Reset or Analog I/O: Digital Output, Input and Pull Disabled

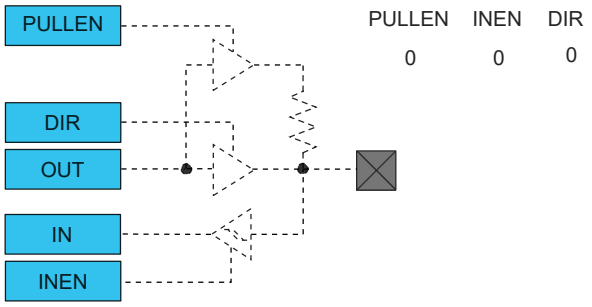

19.6.4. PORT Access Priority

The PORT is accessed by different systems:

- The ARM® CPU through the ARM® single-cycle I/O port (IOBUS)
- The ARM® CPU through the high-speed matrix and the AHB/APB bridge (APB)

The following priority is adopted:

1. ARM® CPU IOBUS (No wait tolerated)
2. APB

© 2025 Microchip Technology Inc. and its subsidiaries

19.7. Register Summary

The I/O pins are assembled in pin groups with up to 32 pins. Group 0 consists of the PA pins, and group 1 is for the PB pins, etc. Each pin group has its own PORT registers, with a 0x80 address spacing between groups. For example, the register address offset for the Data Direction (DIR) register for group 0 (PA00 to PA31) is 0x00, and the register address offset for the DIR register for group 1 (PB00 to PB31) is 0x80.

Offset	Name	Bit Pos.	7	6	5	4	3	2	1	0
0x00	DIR	7:0	DIR[7:0]							
		15:8	DIR[15:8]							
		23:16	DIR[23:16]							
		31:24	DIR[31:24]							
0x04	DIRCLR	7:0	DIRCLR[7:0]							
		15:8	DIRCLR[15:8]							
		23:16	DIRCLR[23:16]							
		31:24	DIRCLR[31:24]							
0x08	DIRSET	7:0	DIRSET[7:0]							
		15:8	DIRSET[15:8]							
		23:16	DIRSET[23:16]							
		31:24	DIRSET[31:24]							
0x0C	DIRTGL	7:0	DIRTGL[7:0]							
		15:8	DIRTGL[15:8]							
		23:16	DIRTGL[23:16]							
		31:24	DIRTGL[31:24]							
0x10	OUT	7:0	OUT[7:0]							
		15:8	OUT[15:8]							
		23:16	OUT[23:16]							
		31:24	OUT[31:24]							
0x14	OUTCLR	7:0	OUTCLR[7:0]							
		15:8	OUTCLR[15:8]							
		23:16	OUTCLR[23:16]							
		31:24	OUTCLR[31:24]							
0x18	OUTSET	7:0	OUTSET[7:0]							
		15:8	OUTSET[15:8]							
		23:16	OUTSET[23:16]							
		31:24	OUTSET[31:24]							
0x1C	OUTTGL	7:0	OUTTGL[7:0]							
		15:8	OUTTGL[15:8]							
		23:16	OUTTGL[23:16]							
		31:24	OUTTGL[31:24]							
0x20	IN	7:0	IN[7:0]							
		15:8	IN[15:8]							
		23:16	IN[23:16]							
		31:24	IN[31:24]							
0x24	CTRL	7:0	SAMPLING[7:0]							
		15:8	SAMPLING[15:8]							
		23:16	SAMPLING[23:16]							
		31:24	SAMPLING[31:24]							
0x28	WRCONFIG	7:0	PINMASK[7:0]							
		15:8	PINMASK[15:8]							
		23:16		DRVSTR				PULLEN	INEN	PMUXEN
		31:24	HWSEL	WRPINCFG		WRPMUX	PMUX[3:0]			
0x2C	EVCTRL	7:0	PORTEI0	EVACT0[1:0]		PID0[4:0]				
		15:8	PORTEI1	EVACT1[1:0]		PID1[4:0]				
		23:16	PORTEI2	EVACT2[1:0]		PID2[4:0]				
		31:24	PORTEI3	EVACT3[1:0]		PID3[4:0]				
0x30	PMUX0	7:0	PMUXO[3:0]				PMUXE[3:0]			
...										
0x3F	PMUX15	7:0	PMUXO[3:0]				PMUXE[3:0]			
0x40	PINCFG0	7:0		DRVSTR						
...										

© 2025 Microchip Technology Inc. and its subsidiaries

Register Summary (continued)

Offset	Name	Bit Pos.	7	6	5	4	3	2	1	0
0x5F	PINCFG31	7:0		DRVSTR						

© 2025 Microchip Technology Inc. and its subsidiaries

19.7.1. Data Direction

Name: DIR
Offset: 0x00
Reset: 0x00000000
Property: PAC Write-Protection

This register allows the user to configure one or more I/O pins as an input or output. This register can be manipulated without doing a read-modify-write operation by using the Data Direction Toggle (DIRTGL), Data Direction Clear (DIRCLR) and Data Direction Set (DIRSET) registers.

Tip: The I/O pins are assembled in pin groups ("PORT groups") with up to 32 pins. Group 0 consists of the PA pins, group 1 is for the PB pins, etc. Each pin group has its own PORT registers, with a 0x80 address spacing. For example, the register address offset for the Data Direction (DIR) register for group 0 (PA00 to PA31) is 0x00, and the register address offset for the DIR register for group 1 (PB00 to PB31) is 0x80.

Table 19-4. Register Bit Attribute Legend

Symbol	Description	Symbol	Description	Symbol	Description
R	Readable bit	**HC**	Cleared by Hardware	(Grey cell)	Unimplemented
W	Writable bit	**HS**	Set by Hardware	**X**	Bit is unknown at Reset
K	Write to clear	**S**	Software settable bit	—	—

Bit	31	30	29	28	27	26	25	24
	DIR[31:24]							
Access	RW	RW	RW	RW	RW	RW	RW	RW
Reset	0	0	0	0	0	0	0	0

Bit	23	22	21	20	19	18	17	16
	DIR[23:16]							
Access	RW	RW	RW	RW	RW	RW	RW	RW
Reset	0	0	0	0	0	0	0	0

Bit	15	14	13	12	11	10	9	8
	DIR[15:8]							
Access	RW	RW	RW	RW	RW	RW	RW	RW
Reset	0	0	0	0	0	0	0	0

Bit	7	6	5	4	3	2	1	0
	DIR[7:0]							
Access	RW	RW	RW	RW	RW	RW	RW	RW
Reset	0	0	0	0	0	0	0	0

Bits 31:0 – DIR[31:0] Port Data Direction
These bits set the data direction for the individual I/O pins in the PORT group.

Value	Description
0	The corresponding I/O pin in the PORT group is configured as an input.
1	The corresponding I/O pin in the PORT group is configured as an output.

© 2025 Microchip Technology Inc. and its subsidiaries

19.7.2. Data Direction Clear

Name: DIRCLR
Offset: 0x04
Reset: 0x00000000
Property: PAC Write-Protection

This register allows the user to set one or more I/O pins as an input, without doing a read-modify-write operation. Changes in this register will also be reflected in the Data Direction (DIR), Data Direction Toggle (DIRTGL) and Data Direction Set (DIRSET) registers.

Tip: The I/O pins are assembled in pin groups ("PORT groups") with up to 32 pins. Group 0 consists of the PA pins, group 1 is for the PB pins, etc. Each pin group has its own PORT registers, with a 0x80 address spacing. For example, the register address offset for the Data Direction (DIR) register for group 0 (PA00 to PA31) is 0x00, and the register address offset for the DIR register for group 1 (PB00 to PB31) is 0x80.

Table 19-5. Register Bit Attribute Legend

Symbol	Description	Symbol	Description	Symbol	Description
R	Readable bit	**HC**	Cleared by Hardware	(Grey cell)	Unimplemented
W	Writable bit	**HS**	Set by Hardware	**X**	Bit is unknown at Reset
K	Write to clear	**S**	Software settable bit	—	—

Bit	31	30	29	28	27	26	25	24
	DIRCLR[31:24]							
Access	RW	RW	RW	RW	RW	RW	RW	RW
Reset	0	0	0	0	0	0	0	0

Bit	23	22	21	20	19	18	17	16
	DIRCLR[23:16]							
Access	RW	RW	RW	RW	RW	RW	RW	RW
Reset	0	0	0	0	0	0	0	0

Bit	15	14	13	12	11	10	9	8
	DIRCLR[15:8]							
Access	RW	RW	RW	RW	RW	RW	RW	RW
Reset	0	0	0	0	0	0	0	0

Bit	7	6	5	4	3	2	1	0
	DIRCLR[7:0]							
Access	RW	RW	RW	RW	RW	RW	RW	RW
Reset	0	0	0	0	0	0	0	0

Bits 31:0 – DIRCLR[31:0] Port Data Direction Clear
Writing a '0' to a bit has no effect.
Writing a '1' to a bit will clear the corresponding bit in the DIR register, which configures the I/O pin as an input.

Value	Description
0	The corresponding I/O pin in the PORT group will keep its configuration.
1	The corresponding I/O pin in the PORT group is configured as input.

© 2025 Microchip Technology Inc. and its subsidiaries

19.7.3. Data Direction Set

Name: DIRSET
Offset: 0x08
Reset: 0x00000000
Property: PAC Write-Protection

This register allows the user to set one or more I/O pins as an output, without doing a read-modify-write operation. Changes in this register will also be reflected in the Data Direction (DIR), Data Direction Toggle (DIRTGL) and Data Direction Clear (DIRCLR) registers.

Tip: The I/O pins are assembled in pin groups ("PORT groups") with up to 32 pins. Group 0 consists of the PA pins, group 1 is for the PB pins, etc. Each pin group has its own PORT registers, with a 0x80 address spacing. For example, the register address offset for the Data Direction (DIR) register for group 0 (PA00 to PA31) is 0x00, and the register address offset for the DIR register for group 1 (PB00 to PB31) is 0x80.

Table 19-6. Register Bit Attribute Legend

Symbol	Description	Symbol	Description	Symbol	Description
R	Readable bit	**HC**	Cleared by Hardware	(Grey cell)	Unimplemented
W	Writable bit	**HS**	Set by Hardware	**X**	Bit is unknown at Reset
K	Write to clear	**S**	Software settable bit	—	—

Bit	31	30	29	28	27	26	25	24
	DIRSET[31:24]							
Access	RW	RW	RW	RW	RW	RW	RW	RW
Reset	0	0	0	0	0	0	0	0

Bit	23	22	21	20	19	18	17	16
	DIRSET[23:16]							
Access	RW	RW	RW	RW	RW	RW	RW	RW
Reset	0	0	0	0	0	0	0	0

Bit	15	14	13	12	11	10	9	8
	DIRSET[15:8]							
Access	RW	RW	RW	RW	RW	RW	RW	RW
Reset	0	0	0	0	0	0	0	0

Bit	7	6	5	4	3	2	1	0
	DIRSET[7:0]							
Access	RW	RW	RW	RW	RW	RW	RW	RW
Reset	0	0	0	0	0	0	0	0

Bits 31:0 – DIRSET[31:0] Port Data Direction Set
Writing '0' to a bit has no effect.
Writing '1' to a bit will set the corresponding bit in the DIR register, which configures the I/O pin as an output.

Value	Description
0	The corresponding I/O pin in the PORT group will keep its configuration.
1	The corresponding I/O pin in the PORT group is configured as an output.

© 2025 Microchip Technology Inc. and its subsidiaries

19.7.4. Data Direction Toggle

Name: DIRTGL
Offset: 0x0C
Reset: 0x00000000
Property: PAC Write-Protection

This register allows the user to toggle the direction of one or more I/O pins, without doing a read-modify-write operation. Changes in this register will also be reflected in the Data Direction (DIR), Data Direction Set (DIRSET) and Data Direction Clear (DIRCLR) registers.

Tip: The I/O pins are assembled in pin groups ("PORT groups") with up to 32 pins. Group 0 consists of the PA pins, group 1 is for the PB pins, etc. Each pin group has its own PORT registers, with a 0x80 address spacing. For example, the register address offset for the Data Direction (DIR) register for group 0 (PA00 to PA31) is 0x00, and the register address offset for the DIR register for group 1 (PB00 to PB31) is 0x80.

Table 19-7. Register Bit Attribute Legend

Symbol	Description	Symbol	Description	Symbol	Description
R	Readable bit	**HC**	Cleared by Hardware	(Grey cell)	Unimplemented
W	Writable bit	**HS**	Set by Hardware	**X**	Bit is unknown at Reset
K	Write to clear	**S**	Software settable bit	—	—

Bit	31	30	29	28	27	26	25	24
	DIRTGL[31:24]							
Access	RW	RW	RW	RW	RW	RW	RW	RW
Reset	0	0	0	0	0	0	0	0

Bit	23	22	21	20	19	18	17	16
	DIRTGL[23:16]							
Access	RW	RW	RW	RW	RW	RW	RW	RW
Reset	0	0	0	0	0	0	0	0

Bit	15	14	13	12	11	10	9	8
	DIRTGL[15:8]							
Access	RW	RW	RW	RW	RW	RW	RW	RW
Reset	0	0	0	0	0	0	0	0

Bit	7	6	5	4	3	2	1	0
	DIRTGL[7:0]							
Access	RW	RW	RW	RW	RW	RW	RW	RW
Reset	0	0	0	0	0	0	0	0

Bits 31:0 – DIRTGL[31:0] Port Data Direction Toggle
Writing '0' to a bit has no effect.
Writing '1' to a bit will toggle the corresponding bit in the DIR register, which reverses the direction of the I/O pin.

Value	Description
0	The corresponding I/O pin in the PORT group will keep its configuration.
1	The direction of the corresponding I/O pin is toggled.

© 2025 Microchip Technology Inc. and its subsidiaries

19.7.5. Data Output Value

Name: OUT
Offset: 0x10
Reset: 0x00000000
Property: PAC Write-Protection

This register sets the data output drive value for the individual I/O pins in the PORT.

This register can be manipulated without doing a read-modify-write operation by using the Data Output Value Clear (OUTCLR), Data Output Value Set (OUTSET), and Data Output Value Toggle (OUTTGL) registers.

Tip: The I/O pins are assembled in pin groups ("PORT groups") with up to 32 pins. Group 0 consists of the PA pins, group 1 is for the PB pins, etc. Each pin group has its own PORT registers, with a 0x80 address spacing. For example, the register address offset for the Data Direction (DIR) register for group 0 (PA00 to PA31) is 0x00, and the register address offset for the DIR register for group 1 (PB00 to PB31) is 0x80.

Table 19-8. Register Bit Attribute Legend

Symbol	Description	Symbol	Description	Symbol	Description
R	Readable bit	**HC**	Cleared by Hardware	(Grey cell)	Unimplemented
W	Writable bit	**HS**	Set by Hardware	**X**	Bit is unknown at Reset
K	Write to clear	**S**	Software settable bit	—	—

Bit	31	30	29	28	27	26	25	24
	OUT[31:24]							
Access	RW	RW	RW	RW	RW	RW	RW	RW
Reset	0	0	0	0	0	0	0	0

Bit	23	22	21	20	19	18	17	16
	OUT[23:16]							
Access	RW	RW	RW	RW	RW	RW	RW	RW
Reset	0	0	0	0	0	0	0	0

Bit	15	14	13	12	11	10	9	8
	OUT[15:8]							
Access	RW	RW	RW	RW	RW	RW	RW	RW
Reset	0	0	0	0	0	0	0	0

Bit	7	6	5	4	3	2	1	0
	OUT[7:0]							
Access	RW	RW	RW	RW	RW	RW	RW	RW
Reset	0	0	0	0	0	0	0	0

Bits 31:0 – OUT[31:0] PORT Data Output Value
For pins configured as outputs via the Data Direction register (DIR), these bits set the logical output drive level.
For pins configured as inputs via the Data Direction register (DIR) and with pull enabled via the Pull Enable bit in the Pin Configuration register (PINCFG.PULLEN), these bits will set the input pull direction.

© 2025 Microchip Technology Inc. and its subsidiaries

Value	Description
0	The I/O pin output is driven low, or the input is connected to an internal pull-down.
1	The I/O pin output is driven high, or the input is connected to an internal pull-up.

© 2025 Microchip Technology Inc. and its subsidiaries

19.7.6. Data Output Value Clear

Name: OUTCLR
Offset: 0x14
Reset: 0x00000000
Property: PAC Write-Protection

This register allows the user to set one or more output I/O pin drive levels low, without doing a read-modify-write operation. Changes in this register will also be reflected in the Data Output Value (OUT), Data Output Value Toggle (OUTTGL) and Data Output Value Set (OUTSET) registers.

Tip: The I/O pins are assembled in pin groups ("PORT groups") with up to 32 pins. Group 0 consists of the PA pins, group 1 is for the PB pins, etc. Each pin group has its own PORT registers, with a 0x80 address spacing. For example, the register address offset for the Data Direction (DIR) register for group 0 (PA00 to PA31) is 0x00, and the register address offset for the DIR register for group 1 (PB00 to PB31) is 0x80.

Table 19-9. Register Bit Attribute Legend

Symbol	Description	Symbol	Description	Symbol	Description
R	Readable bit	**HC**	Cleared by Hardware	(Grey cell)	Unimplemented
W	Writable bit	**HS**	Set by Hardware	**X**	Bit is unknown at Reset
K	Write to clear	**S**	Software settable bit	—	—

Bit	31	30	29	28	27	26	25	24
	OUTCLR[31:24]							
Access	RW	RW	RW	RW	RW	RW	RW	RW
Reset	0	0	0	0	0	0	0	0

Bit	23	22	21	20	19	18	17	16
	OUTCLR[23:16]							
Access	RW	RW	RW	RW	RW	RW	RW	RW
Reset	0	0	0	0	0	0	0	0

Bit	15	14	13	12	11	10	9	8
	OUTCLR[15:8]							
Access	RW	RW	RW	RW	RW	RW	RW	RW
Reset	0	0	0	0	0	0	0	0

Bit	7	6	5	4	3	2	1	0
	OUTCLR[7:0]							
Access	RW	RW	RW	RW	RW	RW	RW	RW
Reset	0	0	0	0	0	0	0	0

Bits 31:0 – OUTCLR[31:0] PORT Data Output Value Clear
Writing '0' to a bit has no effect.
Writing '1' to a bit will clear the corresponding bit in the OUT register. Pins configured as outputs via the Data Direction register (DIR) will be set to low output drive level. Pins configured as inputs via DIR and with pull enabled via the Pull Enable bit in the Pin Configuration register (PINCFG.PULLEN) will set the input pull direction to an internal pull-down.

Value	Description
0	The corresponding I/O pin in the PORT group will keep its configuration.

© 2025 Microchip Technology Inc. and its subsidiaries

Value	Description
1	The corresponding I/O pin output is driven low, or the input is connected to an internal pull-down.

© 2025 Microchip Technology Inc. and its subsidiaries

19.7.7. Data Output Value Set

Name: OUTSET
Offset: 0x18
Reset: 0x00000000
Property: PAC Write-Protection

This register allows the user to set one or more output I/O pin drive levels high, without doing a read-modify-write operation. Changes in this register will also be reflected in the Data Output Value (OUT), Data Output Value Toggle (OUTTGL) and Data Output Value Clear (OUTCLR) registers.

Tip: The I/O pins are assembled in pin groups ("PORT groups") with up to 32 pins. Group 0 consists of the PA pins, group 1 is for the PB pins, etc. Each pin group has its own PORT registers, with a 0x80 address spacing. For example, the register address offset for the Data Direction (DIR) register for group 0 (PA00 to PA31) is 0x00, and the register address offset for the DIR register for group 1 (PB00 to PB31) is 0x80.

Table 19-10. Register Bit Attribute Legend

Symbol	Description	Symbol	Description	Symbol	Description
R	Readable bit	**HC**	Cleared by Hardware	(Grey cell)	Unimplemented
W	Writable bit	**HS**	Set by Hardware	**X**	Bit is unknown at Reset
K	Write to clear	**S**	Software settable bit	—	—

Bit	31	30	29	28	27	26	25	24
	OUTSET[31:24]							
Access	RW	RW	RW	RW	RW	RW	RW	RW
Reset	0	0	0	0	0	0	0	0

Bit	23	22	21	20	19	18	17	16
	OUTSET[23:16]							
Access	RW	RW	RW	RW	RW	RW	RW	RW
Reset	0	0	0	0	0	0	0	0

Bit	15	14	13	12	11	10	9	8
	OUTSET[15:8]							
Access	RW	RW	RW	RW	RW	RW	RW	RW
Reset	0	0	0	0	0	0	0	0

Bit	7	6	5	4	3	2	1	0
	OUTSET[7:0]							
Access	RW	RW	RW	RW	RW	RW	RW	RW
Reset	0	0	0	0	0	0	0	0

Bits 31:0 – OUTSET[31:0] PORT Data Output Value Set
Writing '0' to a bit has no effect.
Writing '1' to a bit will set the corresponding bit in the OUT register, which sets the output drive level high for I/O pins configured as outputs via the Data Direction register (DIR). For pins configured as inputs via Data Direction register (DIR) with pull enabled via the Pull Enable register (PULLEN), these bits will set the input pull direction to an internal pull-up.

Value	Description
0	The corresponding I/O pin in the group will keep its configuration.

© 2025 Microchip Technology Inc. and its subsidiaries

Value	Description
1	The corresponding I/O pin output is driven high, or the input is connected to an internal pull-up.

© 2025 Microchip Technology Inc. and its subsidiaries

19.7.8. Data Output Value Toggle

Name: OUTTGL
Offset: 0x1C
Reset: 0x00000000
Property: PAC Write-Protection

This register allows the user to toggle the drive level of one or more output I/O pins, without doing a read-modify-write operation. Changes in this register will also be reflected in the Data Output Value (OUT), Data Output Value Set (OUTSET) and Data Output Value Clear (OUTCLR) registers.

Tip: The I/O pins are assembled in pin groups ("PORT groups") with up to 32 pins. Group 0 consists of the PA pins, group 1 is for the PB pins, etc. Each pin group has its own PORT registers, with a 0x80 address spacing. For example, the register address offset for the Data Direction (DIR) register for group 0 (PA00 to PA31) is 0x00, and the register address offset for the DIR register for group 1 (PB00 to PB31) is 0x80.

Table 19-11. Register Bit Attribute Legend

Symbol	Description	Symbol	Description	Symbol	Description
R	Readable bit	**HC**	Cleared by Hardware	(Grey cell)	Unimplemented
W	Writable bit	**HS**	Set by Hardware	**X**	Bit is unknown at Reset
K	Write to clear	**S**	Software settable bit	—	—

Bit	31	30	29	28	27	26	25	24
	OUTTGL[31:24]							
Access	RW	RW	RW	RW	RW	RW	RW	RW
Reset	0	0	0	0	0	0	0	0

Bit	23	22	21	20	19	18	17	16
	OUTTGL[23:16]							
Access	RW	RW	RW	RW	RW	RW	RW	RW
Reset	0	0	0	0	0	0	0	0

Bit	15	14	13	12	11	10	9	8
	OUTTGL[15:8]							
Access	RW	RW	RW	RW	RW	RW	RW	RW
Reset	0	0	0	0	0	0	0	0

Bit	7	6	5	4	3	2	1	0
	OUTTGL[7:0]							
Access	RW	RW	RW	RW	RW	RW	RW	RW
Reset	0	0	0	0	0	0	0	0

Bits 31:0 – OUTTGL[31:0] PORT Data Output Value Toggle
Writing '0' to a bit has no effect.
Writing '1' to a bit will toggle the corresponding bit in the OUT register, which inverts the output drive level for I/O pins configured as outputs via the Data Direction register (DIR). For pins configured as inputs via Data Direction register (DIR) with pull enabled via the Pull Enable register (PULLEN), these bits will toggle the input pull direction.

Value	Description
0	The corresponding I/O pin in the PORT group will keep its configuration.

© 2025 Microchip Technology Inc. and its subsidiaries

Value	Description
1	The corresponding OUT bit value is toggled.

© 2025 Microchip Technology Inc. and its subsidiaries

19.7.9. Data Input Value

Name: IN
Offset: 0x20
Reset: 0x00000000
Property: -

Tip: The I/O pins are assembled in pin groups ("PORT groups") with up to 32 pins. Group 0 consists of the PA pins, group 1 is for the PB pins, etc. Each pin group has its own PORT registers, with a 0x80 address spacing. For example, the register address offset for the Data Direction (DIR) register for group 0 (PA00 to PA31) is 0x00, and the register address offset for the DIR register for group 1 (PB00 to PB31) is 0x80.

Table 19-12. Register Bit Attribute Legend

Symbol	Description	Symbol	Description	Symbol	Description
R	Readable bit	**HC**	Cleared by Hardware	(Grey cell)	Unimplemented
W	Writable bit	**HS**	Set by Hardware	**X**	Bit is unknown at Reset
K	Write to clear	**S**	Software settable bit	—	—

Bit	31	30	29	28	27	26	25	24
	IN[31:24]							
Access	R	R	R	R	R	R	R	R
Reset	0	0	0	0	0	0	0	0

Bit	23	22	21	20	19	18	17	16
	IN[23:16]							
Access	R	R	R	R	R	R	R	R
Reset	0	0	0	0	0	0	0	0

Bit	15	14	13	12	11	10	9	8
	IN[15:8]							
Access	R	R	R	R	R	R	R	R
Reset	0	0	0	0	0	0	0	0

Bit	7	6	5	4	3	2	1	0
	IN[7:0]							
Access	R	R	R	R	R	R	R	R
Reset	0	0	0	0	0	0	0	0

Bits 31:0 – IN[31:0] PORT Data Input Value
These bits are cleared when the corresponding I/O pin input sampler detects a logical low level on the input pin.
These bits are set when the corresponding I/O pin input sampler detects a logical high level on the input pin.

© 2025 Microchip Technology Inc. and its subsidiaries

19.7.10. Control

Name: CTRL
Offset: 0x24
Reset: 0x00000000
Property: PAC Write-Protection

Tip: The I/O pins are assembled in pin groups ("PORT groups") with up to 32 pins. Group 0 consists of the PA pins, group 1 is for the PB pins, etc. Each pin group has its own PORT registers, with a 0x80 address spacing. For example, the register address offset for the Data Direction (DIR) register for group 0 (PA00 to PA31) is 0x00, and the register address offset for the DIR register for group 1 (PB00 to PB31) is 0x80.

Table 19-13. Register Bit Attribute Legend

Symbol	Description	Symbol	Description	Symbol	Description
R	Readable bit	**HC**	Cleared by Hardware	(Grey cell)	Unimplemented
W	Writable bit	**HS**	Set by Hardware	**X**	Bit is unknown at Reset
K	Write to clear	**S**	Software settable bit	—	—

Bit	31	30	29	28	27	26	25	24
	SAMPLING[31:24]							
Access	RW	RW	RW	RW	RW	RW	RW	RW
Reset	0	0	0	0	0	0	0	0

Bit	23	22	21	20	19	18	17	16
	SAMPLING[23:16]							
Access	RW	RW	RW	RW	RW	RW	RW	RW
Reset	0	0	0	0	0	0	0	0

Bit	15	14	13	12	11	10	9	8
	SAMPLING[15:8]							
Access	RW	RW	RW	RW	RW	RW	RW	RW
Reset	0	0	0	0	0	0	0	0

Bit	7	6	5	4	3	2	1	0
	SAMPLING[7:0]							
Access	RW	RW	RW	RW	RW	RW	RW	RW
Reset	0	0	0	0	0	0	0	0

Bits 31:0 – SAMPLING[31:0] Input Sampling Mode
Configures the input sampling functionality of the I/O pin input samplers, for pins configured as inputs via the Data Direction register (DIR).
The input samplers are enabled and disabled in sub-groups of eight. Thus if any pins within a byte request continuous sampling, all pins in that eight pin sub-group will be continuously sampled.

Value	Description
0	On demand sampling of I/O pin is enabled.
1	Continuous sampling of I/O pin is enabled.

© 2025 Microchip Technology Inc. and its subsidiaries

19.7.11. Write Configuration

Name: WRCONFIG
Offset: 0x28
Reset: 0x00000000
Property: PAC Write-Protection, Write-Only

Tip: The I/O pins are assembled in pin groups ("PORT groups") with up to 32 pins. Group 0 consists of the PA pins, group 1 is for the PB pins, etc. Each pin group has its own PORT registers, with a 0x80 address spacing. For example, the register address offset for the Data Direction (DIR) register for group 0 (PA00 to PA31) is 0x00, and the register address offset for the DIR register for group 1 (PB00 to PB31) is 0x80.

This Write-only register is used to configure several pins simultaneously with the same configuration and/or peripheral multiplexing.

In order to avoid side effect of non-atomic access, 8-bit or 16-bit writes to this register will have no effect. Reading this register always returns zero.

Table 19-14. Register Bit Attribute Legend

Symbol	Description	Symbol	Description	Symbol	Description
R	Readable bit	**HC**	Cleared by Hardware	(Grey cell)	Unimplemented
W	Writable bit	**HS**	Set by Hardware	**X**	Bit is unknown at Reset
K	Write to clear	**S**	Software settable bit	—	—

Bit	31	30	29	28	27	26	25	24
	HWSEL	WRPINCFG		WRPMUX	PMUX[3:0]			
Access	W	W		W	W	W	W	W
Reset	0	0		0	0	0	0	0

Bit	23	22	21	20	19	18	17	16
		DRVSTR				PULLEN	INEN	PMUXEN
Access		W				W	W	W
Reset		0				0	0	0

Bit	15	14	13	12	11	10	9	8
	PINMASK[15:8]							
Access	W	W	W	W	W	W	W	W
Reset	0	0	0	0	0	0	0	0

Bit	7	6	5	4	3	2	1	0
	PINMASK[7:0]							
Access	W	W	W	W	W	W	W	W
Reset	0	0	0	0	0	0	0	0

Bit 31 – HWSEL Half-Word Select
This bit selects the half-word field of a 32-PORT group to be reconfigured in the atomic write operation.
This bit will always read as zero.

Value	Description
0	The lower 16 pins of the PORT group will be configured.

© 2025 Microchip Technology Inc. and its subsidiaries

Value	Description
1	The upper 16 pins of the PORT group will be configured.

Bit 30 – WRPINCFG Write PINCFG

This bit determines whether the atomic write operation will update the Pin Configuration register (PINCFGy) or not for all pins selected by the WRCONFIG.PINMASK and WRCONFIG.HWSEL bits.
Writing '0' to this bit has no effect.
Writing '1' to this bit updates the configuration of the selected pins with the written WRCONFIG.DRVSTR, WRCONFIG.PULLEN, WRCONFIG.INEN, WRCONFIG.PMUXEN, and WRCONFIG.PINMASK values.
This bit will always read as zero.

Value	Description
0	The PINCFGy registers of the selected pins will not be updated.
1	The PINCFGy registers of the selected pins will be updated.

Bit 28 – WRPMUX Write PMUX

This bit determines whether the atomic write operation will update the Peripheral Multiplexing register (PMUXn) or not for all pins selected by the WRCONFIG.PINMASK and WRCONFIG.HWSEL bits.
Writing '0' to this bit has no effect.
Writing '1' to this bit updates the pin multiplexer configuration of the selected pins with the written WRCONFIG. PMUX value.
This bit will always read as zero.

Value	Description
0	The PMUXn registers of the selected pins will not be updated.
1	The PMUXn registers of the selected pins will be updated.

Bits 27:24 – PMUX[3:0] Peripheral Multiplexing

These bits determine the new value written to the Peripheral Multiplexing register (PMUXn) for all pins selected by the WRCONFIG.PINMASK and WRCONFIG.HWSEL bits, when the WRCONFIG.WRPMUX bit is set.
These bits will always read as zero.

Bit 22 – DRVSTR Output Driver Strength Selection

This bit determines the new value written to PINCFGy.DRVSTR for all pins selected by the WRCONFIG.PINMASK and WRCONFIG.HWSEL bits, when the WRCONFIG.WRPINCFG bit is set.
This bit will always read as zero.

Bit 18 – PULLEN Pull Enable

This bit determines the new value written to PINCFGy.PULLEN for all pins selected by the WRCONFIG.PINMASK and WRCONFIG.HWSEL bits, when the WRCONFIG.WRPINCFG bit is set.
This bit will always read as zero.

Bit 17 – INEN Input Buffer Enable

This bit determines the new value written to PINCFGy.INEN for all pins selected by the WRCONFIG.PINMASK and WRCONFIG.HWSEL bits, when the WRCONFIG.WRPINCFG bit is set.
This bit will always read as zero.

Bit 16 – PMUXEN Peripheral Multiplexer Enable

This bit determines the new value written to PINCFGy.PMUXEN for all pins selected by the WRCONFIG.PINMASK and WRCONFIG.HWSEL bits, when the WRCONFIG.WRPINCFG bit is set.
This bit will always read as zero.

© 2025 Microchip Technology Inc. and its subsidiaries

Bits 15:0 – PINMASK[15:0] Pin Mask for Multiple Pin Configuration

These bits select the pins to be configured within the half-word group selected by the WRCONFIG.HWSEL bit.

These bits will always read as zero.

Value	Description
0	The configuration of the corresponding I/O pin in the half-word group will be left unchanged.
1	The configuration of the corresponding I/O pin in the half-word PORT group will be updated.

© 2025 Microchip Technology Inc. and its subsidiaries

19.7.12. Peripheral Multiplexing n

Name: PMUX
Offset: 0x30 + n*0x01 [n=0..15]
Property: PAC Write-Protection

Tip: The I/O pins are assembled in pin groups ("PORT groups") with up to 32 pins. Group 0 consists of the PA pins, group 1 is for the PB pins, etc. Each pin group has its own PORT registers, with a 0x80 address spacing. For example, the register address offset for the Data Direction (DIR) register for group 0 (PA00 to PA31) is 0x00, and the register address offset for the DIR register for group 1 (PB00 to PB31) is 0x80.

There are up to 16 Peripheral Multiplexing registers in each group, one for every set of two subsequent I/O lines. The n denotes the number of the set of I/O lines.

Table 19-15. Register Bit Attribute Legend

Symbol	Description	Symbol	Description	Symbol	Description
R	Readable bit	**HC**	Cleared by Hardware	(Grey cell)	Unimplemented
W	Writable bit	**HS**	Set by Hardware	**X**	Bit is unknown at Reset
K	Write to clear	**S**	Software settable bit	—	—

Bit	7	6	5	4	3	2	1	0
	PMUXO[3:0]				PMUXE[3:0]			
Access	RW	RW	RW	RW	RW	RW	RW	RW
Reset	0	0	0	0	0	0	0	0

Bits 7:4 – PMUXO[3:0] Peripheral Multiplexing for Odd-Numbered Pin
These bits select the peripheral function for odd-numbered pins (2*n + 1) of a PORT group, if the corresponding PINCFGy.PMUXEN bit is '1'.
Not all possible values for this selection may be valid. For more details, refer to Pinout and Packaging.

PMUXO[3:0]	Name	Description
0x0	A	Peripheral function A selected
0x1	B	Peripheral function B selected
0x2	C	Peripheral function C selected
0x3	D	Peripheral function D selected
0x4	E	Peripheral function E selected
0x6	G	Peripheral function G selected
0x7	H	Peripheral function H selected
0x8	I	Peripheral function I selected
0x9-0xF	-	Reserved

Bits 3:0 – PMUXE[3:0] Peripheral Multiplexing for Even-Numbered Pin
These bits select the peripheral function for even-numbered pins (2*n) of a PORT group, if the corresponding PINCFGy.PMUXEN bit is '1'.
Not all possible values for this selection may be valid. For more details, refer to Pinout and Packaging.

PMUXE[3:0]	Name	Description
0x0	A	Peripheral function A selected
0x1	B	Peripheral function B selected

© 2025 Microchip Technology Inc. and its subsidiaries

PMUXE (continued)

PMUXE[3:0]	Name	Description
0x2	C	Peripheral function C selected
0x3	D	Peripheral function D selected
0x4	E	Peripheral function E selected
0x6	G	Peripheral function G selected
0x7	H	Peripheral function H selected
0x8	I	Peripheral function I selected
0x9-0xF	-	Reserved

© 2025 Microchip Technology Inc. and its subsidiaries

19.7.13. Pin Configuration n

Name: PINCFG
Offset: 0x40 + n*0x01 [n=0..31]
Reset: 0x00
Property: PAC Write-Protection

Tip: The I/O pins are assembled in pin groups ("PORT groups") with up to 32 pins. Group 0 consists of the PA pins, group 1 is for the PB pins, etc. Each pin group has its own PORT registers, with a 0x80 address spacing. For example, the register address offset for the Data Direction (DIR) register for group 0 (PA00 to PA31) is 0x00, and the register address offset for the DIR register for group 1 (PB00 to PB31) is 0x80.

There are up to 32 Pin Configuration registers in each PORT group, one for each I/O line.

Table 19-16. Register Bit Attribute Legend

Symbol	Description	Symbol	Description	Symbol	Description
R	Readable bit	**HC**	Cleared by Hardware	(Grey cell)	Unimplemented
W	Writable bit	**HS**	Set by Hardware	**X**	Bit is unknown at Reset
K	Write to clear	**S**	Software settable bit	—	—

Bit	7	6	5	4	3	2	1	0
		DRVSTR						
Access		RW						
Reset		0						

Bit 6 – DRVSTR Output Driver Strength Selection
This bit controls the output driver strength of an I/O pin configured as an output.

Value	Description
0	Pin drive strength is set to normal drive strength.
1	Pin drive strength is set to stronger drive strength.

© 2025 Microchip Technology Inc. and its subsidiaries

19.7.14. Event Input Control

Name: EVCTRL
Offset: 0x2C
Reset: 0x00000000
Property: PAC Write-Protection

Tip: The I/O pins are assembled in pin groups ("PORT groups") with up to 32 pins. Group 0 consists of the PA pins, group 1 is for the PB pins, etc. Each pin group has its own PORT registers, with a 0x80 address spacing. For example, the register address offset for the Data Direction (DIR) register for group 0 (PA00 to PA31) is 0x00, and the register address offset for the DIR register for group 1 (PB00 to PB31) is 0x80.

There are up to four input event pins for each PORT group. Each byte of this register addresses one Event input pin.

Bit	31	30	29	28	27	26	25	24
	PORTEI3	EVACT3[1:0]		PID3[4:0]				
Access	RW	RW	RW	RW	RW	RW	RW	RW
Reset	0	0	0	0	0	0	0	0

Bit	23	22	21	20	19	18	17	16
	PORTEI2	EVACT2[1:0]		PID2[4:0]				
Access	RW	RW	RW	RW	RW	RW	RW	RW
Reset	0	0	0	0	0	0	0	0

Bit	15	14	13	12	11	10	9	8
	PORTEI1	EVACT1[1:0]		PID1[4:0]				
Access	RW	RW	RW	RW	RW	RW	RW	RW
Reset	0	0	0	0	0	0	0	0

Bit	7	6	5	4	3	2	1	0
	PORTEI0	EVACT0[1:0]		PID0[4:0]				
Access	RW	RW	RW	RW	RW	RW	RW	RW
Reset	0	0	0	0	0	0	0	0

Bits 7, 15, 23, 31 – PORTEIx PORT Event Input Enable x [x = 3..0]

Value	Description
0	The event action x (EVACTx) will not be triggered on any incoming event.
1	The event action x (EVACTx) will be triggered on any incoming event.

Bits 5:6, 13:14, 21:22, 29:30 – EVACTx PORT Event Action x [x = 3..0]
These bits define the event action the PORT will perform on event input x. See also Table 19-17.

Bits 0:4, 8:12, 16:20, 24:28 – PIDx PORT Event Pin Identifier x [x = 3..0]
These bits define the I/O pin on which the event action will be performed, according to Table 19-18.

Table 19-17. PORT Event x Action (x = [3..0])

Value	Name	Description
0x0	OUT	Output register of pin will be set to level of event.

© 2025 Microchip Technology Inc. and its subsidiaries

Table 19-17. PORT Event x Action (x = [3..0]) (continued)

Value	Name	Description
0x1	SET	Set output register of pin on event.
0x2	CLR	Clear output register of pin on event.
0x3	TGL	Toggle output register of pin on event.

Table 19-18. PORT Event x Pin Identifier (x = [3..0])

Value	Name	Description
0x0	PIN0	Event action to be executed on PIN 0.
0x1	PIN1	Event action to be executed on PIN 1.
...	...	...
0x31	PIN31	Event action to be executed on PIN 31.

© 2025 Microchip Technology Inc. and its subsidiaries

20. Event System (EVSYS)

20.1. Overview

The Event System allows autonomous, low-latency, and configurable communication between peripherals.

Several peripherals can be configured to generate and/or respond to signals known as events. The exact condition to generate an event, or the action taken upon receiving an event, is specific to each peripheral. Peripherals that respond to events are called event users. Peripherals that generate events are called event generators. A peripheral can have one or more event generators and can have one or more event users.

Communication is made without CPU intervention and without consuming system resources, such as bus or RAM bandwidth. This reduces the load on the CPU and other system resources, compared to a traditional interrupt-based system.

20.2. Features

- 8 configurable event channels:
  - Can be connected to any event generator
  - Can provide a pure asynchronous, resynchronized, or synchronous path
- 59 Event Generators
- 14 Event Users
- Configurable Edge Detector
- Peripherals can be Event Generators, Event Users, or both
- SleepWalking and interrupt for operation in sleep modes
- Software Event Generation
- Each Event User can choose which channel to respond to, and several Event Users can share the same channel and therefore answer to the same event

20.3. Block Diagram

Figure 20-1. Event System Block Diagram

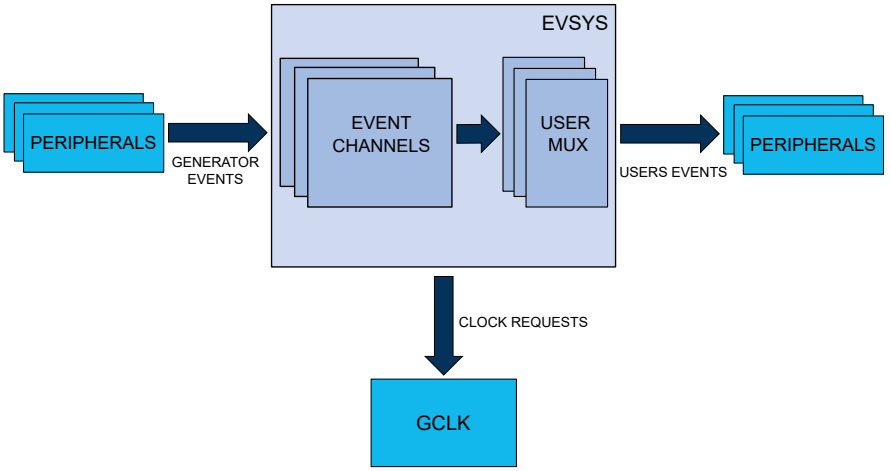

20.4. Signal Description

Not applicable.

© 2025 Microchip Technology Inc. and its subsidiaries

20.5. Peripheral Dependencies

Table 20-1. Peripherals Configuration Summary

Peripheral Name	Base Address	IRQ Line	AHB Clock		APB Clock		Generic Clock	PAC		Events		
			Index	Enabled at Reset	Index	Enabled at Reset	Index	Index	Prot at Reset	User	Generator	SleepWalking
EVSYS	0x42000400	6			1	N	4-11: one per CHANNEL	1	N			Y

20.5.1. I/O Lines

Not applicable.

20.5.2. Power Management

The EVSYS can be used to wake-up the CPU from all Sleep modes, even if the clock used by the EVSYS channel and the EVSYS bus clock are disabled. Refer to the *PM – Power Manager* for details on the different Sleep modes.

In all Sleep modes, although the clock for the EVSYS is stopped, the device still can wake-up the EVSYS clock. Some event generators can generate an event when their clocks are stopped.

20.5.3. Clocks

The EVSYS bus clock (CLK_EVSYS_APB) can be enabled and disabled in the Main Clock module, and the default state of CLK_EVSYS_APB can be found in *Peripheral Clock Masking*.

Each EVSYS channel has a dedicated generic clock (GCLK_EVSYS_CHANNEL_n). These are used for event detection and propagation for each channel. These clocks must be configured and enabled in the generic clock controller before using the EVSYS. Refer to *GCLK - Generic Clock Controller* for details.

20.5.4. Interrupts

The interrupt request line is connected to the interrupt controller. Using the EVSYS interrupts requires the interrupt controller to be configured first. Refer to *Nested Vector Interrupt Controller* for details.

20.5.5. Events

Not applicable.

20.5.6. Debug Operation

When the CPU is halted in Debug mode, this peripheral will continue normal operation. If the peripheral is configured to require periodical service by the CPU through interrupts or similar, improper operation or data loss may result during debugging. This peripheral can be forced to halt operation during debugging.

20.5.7. Register Access Protection

Registers with write access can be optionally write-protected by the Peripheral Access Controller (PAC), except for the following:

- Interrupt Flag Status and Clear register (INTFLAG)

Note: Optional write protection is indicated by the "PAC Write Protection" property in the register description.

Write protection does not apply for accesses through an external debugger.

20.5.8. Analog Connections

Not applicable.

© 2025 Microchip Technology Inc. and its subsidiaries

20.6. Functional Description

20.6.1. Principle of Operation

The Event System consists of several channels which route the internal events from peripherals (generators) to other internal peripherals or IO pins (users). Each event generator can be selected as source for multiple channels, but a channel cannot be set to use multiple event generators at the same time.

20.6.2. Basic Operation

20.6.2.1. Initialization

Before enabling events routing within the system, the User Multiplexer (USER) and Channel (CHANNEL) register must be configured. The User Multiplexer (USER) must be configured first.

Configure the User Multiplexer (USER) register:

1. The channel to be connected to a user is written to the Channel bit group (USER.CHANNEL)
2. The user to connect the channel is written to the User bit group (USER.USER)

Configure the Channel (CHANNEL) register:

1. The channel to be configured is written to the Channel Selection bit group (CHANNEL.CHANNEL)
2. The path to be used is written to the Path Selection bit group (CHANNEL.PATH)
3. The type of edge detection to use on the channel is written to the Edge Selection bit group (CHANNEL.EDGSEL)
4. The event generator to be used is written to the Event Generator bit group (CHANNEL.EVGEN)

20.6.2.2. Enabling, Disabling and Resetting

The EVSYS is always enabled.

The EVSYS is reset by writing a '1' to the Software Reset bit in the Control register (CTRL.SWRST). All registers in the EVSYS will be reset to their initial state and all ongoing events will be canceled. Refer to CTRL.SWRST register for details.

20.6.2.3. User Multiplexer Setup

The user multiplexer defines the channel to be connected to the event user. Each user multiplexer is dedicated to one event user. A user multiplexer receives all event channels output and must be configured to select one of these channels, as shown in the next figure. The channel is selected with the Channel bit group in the USER register (USER.CHANNEL). The user multiplexer must always be configured before the channel. A full list of selectable users can be found in the User Multiplexer register (USER) description. Refer to UserList for details.

To configure a user multiplexer, the USER register must be written in a single 16-bit write. It is possible to read out the configuration of a user by first selecting the user by writing to USER.USER using an 8-bit write and then performing a read of the 16-bit USER register.

© 2025 Microchip Technology Inc. and its subsidiaries

Figure 20-2. User MUX

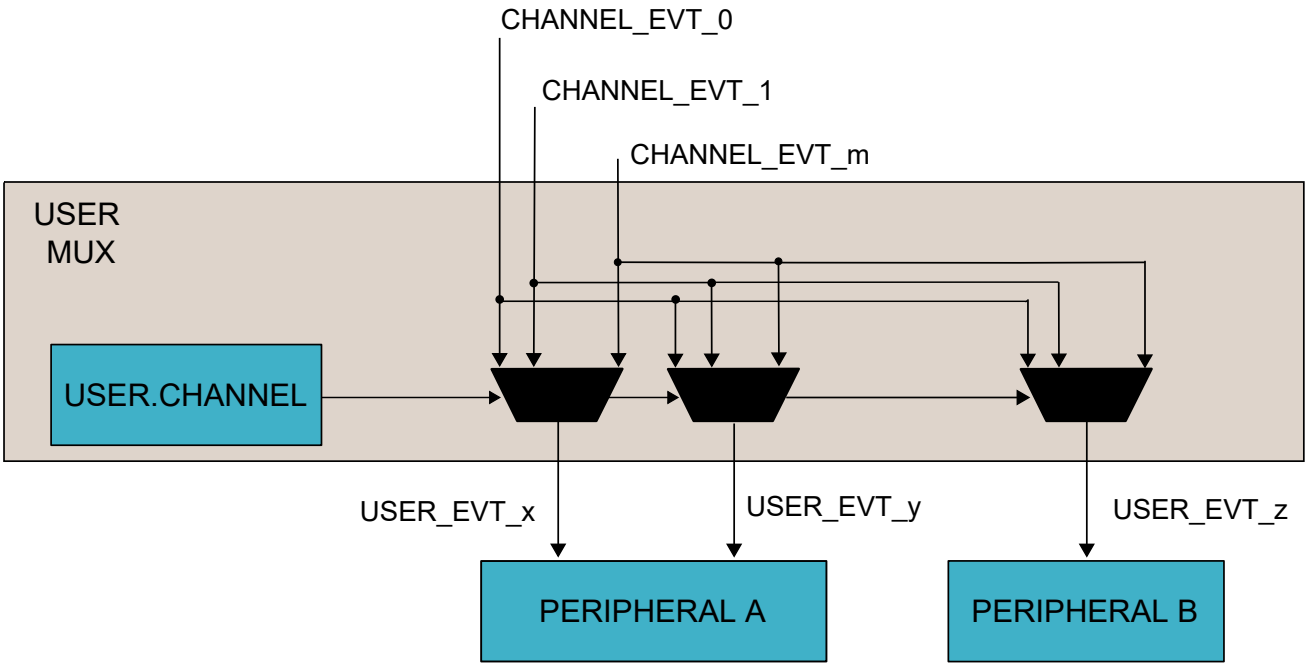

20.6.2.4. Channel Setup

An event channel can select one event from a list of event generators. Depending on configuration, the selected event could be synchronized, resynchronized or asynchronously sent to the users. When synchronization or resynchronization is required, the channel includes an internal edge detector, allowing the Event System to generate internal events when rising, falling or both edges are detected on the selected event generator. An event channel is able to generate internal events for the specific software commands. All these configurations are available in the Channel register (CHANNEL).

To configure a channel, the Channel register must be written in a single 32-bit write. It is possible to read out the configuration of a channel by first selecting the channel by writing to CHANNEL.CHANNEL using an 8-bit write and then performing a read of the CHANNEL register.

20.6.2.5. Channel Path

There are three different ways to propagate the event provided by an event generator:

- Asynchronous path
- Synchronous path
- Resynchronized path

© 2025 Microchip Technology Inc. and its subsidiaries

Figure 20-3. Channel

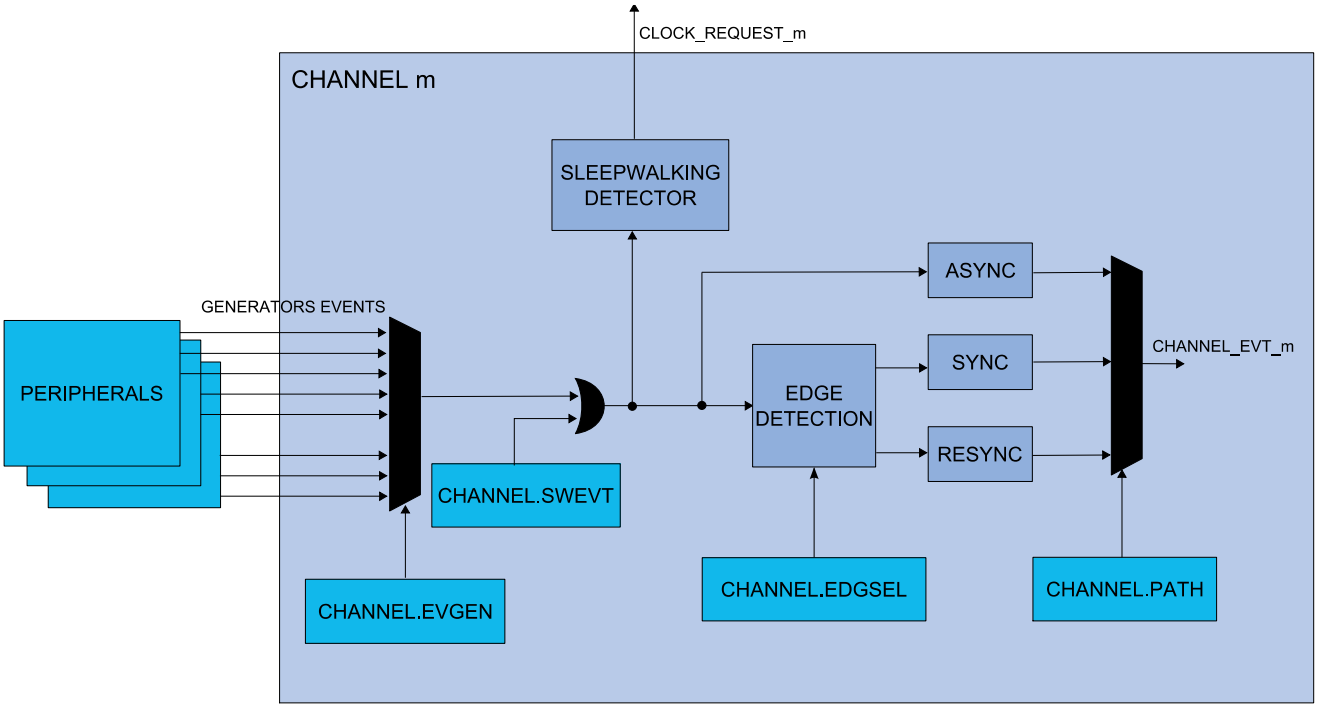

The path is selected by writing to the Path Selection bit group in the Channel register (CHANNEL.PATH).

20.6.2.5.1. Asynchronous Path

When using the asynchronous path, the events are propagated from the event generator to the event user without intervention from the Event System. The GCLK for this channel (GCLK_EVSYS_CHANNEL_n) is not mandatory, meaning that an event will be propagated to the user without any clock latency.

When the asynchronous path is selected, the channel cannot generate any interrupts, and the Channel Status register (CHSTATUS) is always zero. No edge detection is available; this must be handled in the event user. When the event generator and the event user share the same generic clock, using the asynchronous path will propagate the event with the least amount of latency.

20.6.2.5.2. Synchronous Path

The synchronous path should be used when the event generator and the event channel share the same generator for the generic clock and also if event user supports synchronous path. If event user does not support synchronous path, the asynchronous path has to be selected. If they do not share the same clock, a logic change from the event generator to the event channel might not be detected in the channel, which means that the event will not be propagated to the event user. For details on generic clock generators, refer to *GCLK - Generic Clock Controller*.

When using the synchronous path, the channel is able to generate interrupts. The Channel Status bits in the Channel Status register (CHSTATUS) are also updated and available for use.

If the Generic Clocks Request bit in the Control register (CTRL.GCLKREQ) is zero, the channel operates in SleepWalking mode and request the configured generic clock only when an event is to be propagated through the channel. If CTRL.GCLKREQ is one, the generic clock will always be on for the configured channel.

20.6.2.5.3. Resynchronized Path

The resynchronized path should be used when the event generator and the event channel do not share the same generic clock generator. When the resynchronized path is used, resynchronization

© 2025 Microchip Technology Inc. and its subsidiaries

of the event from the event generator is done in the channel. For details on generic clock generators, refer to *GCLK - Generic Clock Controller*.

When the resynchronized path is used, the channel is able to generate interrupts. The channel status bits in the Channel Status register (CHSTATUS) are also updated and available for use.

If the Generic Clocks Request bit in the Control register is zero (CTRL.GCLKREQ=0), the channel operates in SleepWalking mode and requests the configured generic clock only when an event is to be propagated through the channel. If CTRL.GCLKREQ=1 , the generic clock will always be on for the configured channel.

20.6.2.6. Edge Detection

When synchronous or resynchronized paths are used, edge detection must be used. The event system can perform edge detection in three different ways:

- Generate an event only on the rising edge
- Generate an event only on the falling edge
- Generate an event on rising and falling edges

Edge detection is selected by writing to the Edge Selection bit group in the Channel register (CHANNEL.EDGSEL).

If the generator event is a pulse, both edges cannot be selected. Use the rising edge or falling edge detection methods, depending on the generator event default level.

20.6.2.7. Event Generators

Each event channel can receive the events form all event generators. All event generators are listed in the statement of CHANNEL.EVGEN. For details on event generation, refer to the corresponding module chapter. The channel event generator is selected by the Event Generator bit group in the Channel register (CHANNEL.EVGEN). By default, the channels are not connected to any event generators (ie, CHANNEL.EVGEN = 0)

20.6.2.8. Channel Status

The Channel Status register (CHSTATUS) shows the status of the channels when using a synchronous or resynchronized path. There are two different status bits in CHSTATUS for each of the available channels:

- The CHSTATUS.CHBUSYn bit will be set when an event on the corresponding channel n has not been handled by all event users connected to that channel.
- The CHSTATUS.USRRDYn bit will be set when all event users connected to the corresponding channel are ready to handle incoming events on that channel.

20.6.2.9. Software Event

A software event can be initiated on a channel by setting the Software Event bit in the Channel register (CHANNEL.SWEVT) to ‘1’ at the same time as writing the Channel bits (CHANNEL.CHANNEL). This will generate a software event on the selected channel.

The software event can be used for application debugging, and functions like any event generator. To use the software event, the event path must be configured to either a synchronous path or resynchronized path (CHANNEL.PATH = 0x0 or 0x1), edge detection must be configured to rising-edge detection (CHANNEL.EDGSEL= 0x1) and the Generic Clock Request bit must be set to '1' (CTRL.GCLKREQ=0x1).

20.6.3. Interrupts

The EVSYS has the following interrupt sources:

- Overrun Channel n (OVRn): for details, refer to *The Overrun Channel n Interrupt* section
- Event Detected Channel n (EVDn): for details, refer to *The Event Detected Channel n Interrupt* section

© 2025 Microchip Technology Inc. and its subsidiaries

These interrupts events are asynchronous wake-up sources. See *Sleep Mode Controller*.

Each interrupt source has an Interrupt flag that is in the Interrupt Flag Status and Clear (INTFLAG) register. The flag is set when the interrupt is issued. Each interrupt event can be individually enabled by setting a '1' to the corresponding bit in the Interrupt Enable Set (INTENSET) register, and disabled by setting a '1' to the corresponding bit in the Interrupt Enable Clear (INTENCLR) register. An interrupt event is generated when the Interrupt flag is set and the corresponding interrupt is enabled. The interrupt event works until the Interrupt flag is cleared, the interrupt is disabled, or the Event System is Reset. See INTFLAG for details on how to clear Interrupt flags.

All interrupt events from the peripheral are ORed together on system level to generate one combined interrupt request to the NVIC. Refer to the *Nested Vector Interrupt Controller* for details. The event user must read the INTFLAG register to determine the Interrupt condition.

Note that interrupts must be globally enabled for interrupt requests to be generated. Refer to *Nested Vector Interrupt Controller* for details.

20.6.3.1. The Overrun Channel n Interrupt

The Overrun Channel n Interrupt flag in the Interrupt Flag Status and Clear register (INTFLAGn.OVR) will be set, and the optional interrupt will be generated in the following cases:

- One or more event users on channel n is not ready when there is a new event
- An event occurs when the previous event on channel m has not been handled by all event users connected to that channel

The flag will only be set when using resynchronized paths. In the case of asynchronous path, the INTFLAGn.OVR is always read as zero.

20.6.3.2. The Event Detected Channel n Interrupt

The Event Detected Channel n Interrupt flag in the Interrupt Flag Status and Clear register (INTFLAGn.EVD) is set when an event coming from the event generator configured on channel n is detected.

The flag will only be set when using a resynchronized path. In the case of an asynchronous path, the INTFLAGn.EVD is always zero.

20.6.4. Sleep Mode Operation

The EVSYS can generate interrupts to wake up the device from any Sleep mode.

Some event generators can generate an event when the system clock is stopped. The generic clock (GCLK_EVSYS_CHANNELx) for this channel will be restarted if the channel uses a synchronized path or a resynchronized path, without waking the system from sleep. The clock remains active only as long as necessary to handle the event. After the event has been handled, the clock will be turned off and the system will remain in the original Sleep mode. This is known as SleepWalking. When an asynchronous path is used, there is no need for the clock to be activated for the event to be propagated to the user.

On a software Reset, all registers are set to their reset values and any ongoing events are canceled.

© 2025 Microchip Technology Inc. and its subsidiaries

20.7. Register Summary

Offset	Name	Bit Pos.	7	6	5	4	3	2	1	0
0x00	CTRL	7:0				GCLKREQ				SWRST
0x01 ... 0x03	Reserved									
0x04	CHANNEL	7:0	CHANNEL[7:0]							
		15:8								SWEVT
		23:16	EVGEN[7:0]							
		31:24					EDGSEL[1:0]		PATH[1:0]	
0x08	USER	7:0	USER[7:0]							
		15:8	CHANNEL[7:0]							
0x0A ... 0x0B	Reserved									
0x0C	CHSTATUS	7:0	USRRDYn	USRRDYn	USRRDYn	USRRDYn	USRRDYn	USRRDYn	USRRDYn	USRRDYn
		15:8	CHBUSYn	CHBUSYn	CHBUSYn	CHBUSYn	CHBUSYn	CHBUSYn	CHBUSYn	CHBUSYn
		23:16								
		31:24								
0x10	INTENCLR	7:0	OVRn	OVRn	OVRn	OVRn	OVRn	OVRn	OVRn	OVRn
		15:8	EVDn	EVDn	EVDn	EVDn	EVDn	EVDn	EVDn	EVDn
		23:16								
		31:24								
0x14	INTENSET	7:0	OVRn	OVRn	OVRn	OVRn	OVRn	OVRn	OVRn	OVRn
		15:8	EVDn	EVDn	EVDn	EVDn	EVDn	EVDn	EVDn	EVDn
		23:16								
		31:24								
0x18	INTFLAG	7:0	OVRn	OVRn	OVRn	OVRn	OVRn	OVRn	OVRn	OVRn
		15:8	EVDn	EVDn	EVDn	EVDn	EVDn	EVDn	EVDn	EVDn
		23:16								
		31:24								

© 2025 Microchip Technology Inc. and its subsidiaries

20.7.1. Control

Name: CTRL
Offset: 0x00
Reset: 0x00
Property: Write-Protected

Table 20-2. Register Bit Attribute Legend

Symbol	Description	Symbol	Description	Symbol	Description
R	Readable bit	**HC**	Cleared by Hardware	(Grey cell)	Unimplemented
W	Writable bit	**HS**	Set by Hardware	**X**	Bit is unknown at Reset
K	Write to clear	**S**	Software settable bit	—	—

Bit	7	6	5	4	3	2	1	0
				GCLKREQ				SWRST
Access				R/W				W
Reset				0				0

Bit 4 – GCLKREQ Generic Clock Requests
This bit is used to determine whether the generic clocks used for the different channels should be on all the time or only when an event needs the generic clock. Events propagated through asynchronous paths will not need a generic clock.

Value	Description
0	Generic clock is requested and turned on only if an event is detected.
1	Generic clock for a channel is always on.

Bit 0 – SWRST Software Reset
Writing a zero to this bit has no effect.
Writing a one to this bit resets all registers in the EVSYS to their initial state.
Writing a one to CTRL.SWRST will always take precedence, meaning that all other writes in the same write-operation will be discarded.
Note: Before applying a Software Reset it is recommended to disable the event generators.

© 2025 Microchip Technology Inc. and its subsidiaries

20.7.2. Channel

Name: CHANNEL
Offset: 0x04
Reset: 0x00000000
Property: Write-Protected

Table 20-3. Register Bit Attribute Legend

Symbol	Description	Symbol	Description	Symbol	Description
R	Readable bit	**HC**	Cleared by Hardware	(Grey cell)	Unimplemented
W	Writable bit	**HS**	Set by Hardware	**X**	Bit is unknown at Reset
K	Write to clear	**S**	Software settable bit	—	—

Bit	31	30	29	28	27	26	25	24
					EDGSEL[1:0]		PATH[1:0]	
Access					R/W	R/W	R/W	R/W
Reset					0	0	0	0

Bit	23	22	21	20	19	18	17	16
	EVGEN[7:0]							
Access	R/W	R/W	R/W	R/W	R/W	R/W	R/W	R/W
Reset	0	0	0	0	0	0	0	0

Bit	15	14	13	12	11	10	9	8
								SWEVT
Access								R/W
Reset								0

Bit	7	6	5	4	3	2	1	0
	CHANNEL[7:0]							
Access	R/W	R/W	R/W	R/W	R/W	R/W	R/W	R/W
Reset	0	0	0	0	0	0	0	0

Bits 27:26 – EDGSEL[1:0] Edge Detection Selection
These bits set the type of edge detection to be used on the channel.
These bits must be written to zero when using the asynchronous path.

EDGSEL[1:0]	Name	Description
0x0	NO_EVT_OUTPUT	No event output when using the resynchronized or synchronous path
0x1	RISING_EDGE	Event detection only on the rising edge of the signal from the event generator when using the resynchronized or synchronous path
0x2	FALLING_EDGE	Event detection only on the falling edge of the signal from the event generator when using the resynchronized or synchronous path
0x3	BOTH_EDGES	Event detection on rising and falling edges of the signal from the event generator when using the resynchronized or synchronous path

Bits 25:24 – PATH[1:0] Path Selection
These bits are used to choose the path to be used by the selected channel.
The path choice can be limited by the channel source.

PATH[1:0]	Name	Description
0x0	SYNCHRONOUS	Synchronous path
0x1	RESYNCHRONIZED	Resynchronized path
0x2	ASYNCHRONOUS	Asynchronous path
0x3	-	Reserved

© 2025 Microchip Technology Inc. and its subsidiaries

Bits 23:16 – EVGEN[7:0] Event Generator Selection

These bits are used to choose which event generator to connect to the selected channel.

Value	Event Generator	Description
0x00	NONE	No event generator selected
0x01	RTC CMP0	Compare 0 (mode 0 and 1) or Alarm 0 (mode 2)
0x02	RTC CMP1	Compare 1
0x03	RTC OVF	Overflow
0x04	RTC PER0	Period 0
0x05	RTC PER1	Period 1
0x06	RTC PER2	Period 2
0x07	RTC PER3	Period 3
0x08	RTC PER4	Period 4
0x09	RTC PER5	Period 5
0x0A	RTC PER6	Period 6
0x0B	RTC PER7	Period 7
0x0C	EIC EXTINT0	External Interrupt 0
0x0D	EIC EXTINT1	External Interrupt 1
0x0E	EIC EXTINT2	External Interrupt 2
0x0F	EIC EXTINT3	External Interrupt 3
0x10	EIC EXTINT4	External Interrupt 4
0x11	EIC EXTINT5	External Interrupt 5
0x12	EIC EXTINT6	External Interrupt 6
0x13	EIC EXTINT7	External Interrupt 7
0x14	EIC EXTINT8	External Interrupt 8
0x15	EIC EXTINT9	External Interrupt 9
0x16	EIC EXTINT10	External Interrupt 10
0x17	EIC EXTINT11	External Interrupt 11
0x18	EIC EXTINT12	External Interrupt 12
0x19	EIC EXTINT13	External Interrupt 13
0x1A	EIC EXTINT14	External Interrupt 14
0x1B	EIC EXTINT15	External Interrupt 15
0x1C	TC0 OVF	Overflow/Underflow
0x1D	TC0 MC0	Match/Capture 0
0x1E	TC0 MC1	Match/Capture 1
0x1F	TC1 OVF	Overflow/Underflow
0x20	TC1 MC0	Match/Capture 0
0x21	TC1 MC1	Match/Capture 1
0x22	TC2 OVF	Overflow/Underflow
0x23	TC2 MC0	Match/Capture 0
0x24	TC2 MC1	Match/Capture 1
0x25	TC3 OVF	Overflow/Underflow
0x26	TC3 MC0	Match/Capture 0
0x27	TC3 MC1	Match/Capture 1
0x28	TC4 OVF	Overflow/Underflow
0x29	TC4 MC0	Match/Capture 0
0x2A	TC4 MC1	Match/Capture 1
0x2B	TC5 OVF	Overflow/Underflow
0x2C	TC5 MC0	Match/Capture 0
0x2D	TC5 MC1	Match/Capture 1
0x2E	TC6 OVF	Overflow/Underflow
0x2F	TC6 MC0	Match/Capture 0
0x30	TC6 MC1	Match/Capture 1
0x31	TC7 OVF	Overflow/Underflow
0x32	TC7 MC0	Match/Capture 0

© 2025 Microchip Technology Inc. and its subsidiaries

EVGEN (continued)		
Value	Event Generator	Description
0x33	TC7 MC1	Match/Capture 1
0x34	ADC RESRDY	Result Ready
0x35	ADC WINMON	Window Monitor
0x36	AC COMP0	Comparator 0
0x37	AC COMP1	Comparator 1
0x38	AC WIN0	Window 0
0x39	DAC EMPTY	Data Buffer Empty
0x3A	PTC EOC	End of Conversion
0x3B	PTC WCOMP	Window Comparator
0x3C-0x7F	Reserved	-

Bit 8 – SWEVT Software Event

This bit is used to insert a software event on the channel selected by the CHANNEL.CHANNEL bit group.
This bit has the same behavior similar to an event.
This bit must be written together with CHANNEL.CHANNEL using a 16-bit write.
Writing a zero to this bit has no effect.
Writing a one to this bit will trigger a software event for the corresponding channel.
This bit will always return zero when read.

Bits 7:0 – CHANNEL[7:0] Channel Selection

These bits are used to select the channel to be set up or read from.

Value	Channel number
0x00	0
0x01	1
0x02	2
0x03	3
0x04	4
0x05	5
0x06	6
0x07	7
0x08-0xFF	Reserved

© 2025 Microchip Technology Inc. and its subsidiaries

20.7.3. User Multiplexer

Name: USER
Offset: 0x08
Reset: 0x0000
Property: Write-Protected

Table 20-4. Register Bit Attribute Legend

Symbol	Description	Symbol	Description	Symbol	Description
R	Readable bit	**HC**	Cleared by Hardware	(Grey cell)	Unimplemented
W	Writable bit	**HS**	Set by Hardware	**X**	Bit is unknown at Reset
K	Write to clear	**S**	Software settable bit	—	—

Bit	15	14	13	12	11	10	9	8
	CHANNEL[7:0]							
Access	R/W	R/W	R/W	R/W	R/W	R/W	R/W	R/W
Reset	0	0	0	0	0	0	0	0

Bit	7	6	5	4	3	2	1	0
	USER[7:0]							
Access	R/W	R/W	R/W	R/W	R/W	R/W	R/W	R/W
Reset	0	0	0	0	0	0	0	0

Bits 15:8 – CHANNEL[7:0] Channel Event Selection
These bits are used to select the channel to connect to the event user.
Note that to select channel n, the value (n+1) must be written to the USER.CHANNEL bit group.

CHANNEL[7:0]	Channel Number
0x0	No Channel Output Selected
0x1-0x08	Channel n-1 selected
0x09-0xFF	Reserved

Bits 7:0 – USER[7:0] User Multiplexer Selection
These bits select the event user to be configured with a channel, or the event user to read the channel value from.

Table 20-5. User Multiplexer Selection

USER[7:0]	User Multiplexer	Description	Path Type
0x00	TC0		Asynchronous, synchronous and resynchronized paths
0x01	TC1		Asynchronous, synchronous and resynchronized paths
0x02	TC2		Asynchronous, synchronous and resynchronized paths
0x03	TC3		Asynchronous, synchronous and resynchronized paths
0x04	TC4		Asynchronous, synchronous and resynchronized paths
0x05	TC5		Asynchronous, synchronous and resynchronized paths
0x06	TC6		Asynchronous, synchronous and resynchronized paths
0x07	TC7		Asynchronous, synchronous and resynchronized paths
0x08	ADC START	ADC start conversion	Asynchronous path only
0x09	ADC SYNC	Flush ADC	Asynchronous path only
0x0A	AC COMP0	Start comparator 0	Asynchronous path only
0x0B	AC COMP1	Start comparator 1	Asynchronous path only
0x0C	DAC START	DAC start conversion	Asynchronous path only
0x0D	PTC STCONV	PTC start conversion	Asynchronous path only
0x0E-0xFF	Reserved	-	Reserved

© 2025 Microchip Technology Inc. and its subsidiaries

20.7.4. Channel Status

Name: CHSTATUS
Offset: 0x0C
Reset: 0x000F00FF
Property: -

Table 20-6. Register Bit Attribute Legend

Symbol	Description	Symbol	Description	Symbol	Description
R	Readable bit	**HC**	Cleared by Hardware	(Grey cell)	Unimplemented
W	Writable bit	**HS**	Set by Hardware	**X**	Bit is unknown at Reset
K	Write to clear	**S**	Software settable bit	—	—

Bit	31	30	29	28	27	26	25	24
Access								
Reset								

Bit	23	22	21	20	19	18	17	16
Access								
Reset								

Bit	15	14	13	12	11	10	9	8
	CHBUSYn	CHBUSYn	CHBUSYn	CHBUSYn	CHBUSYn	CHBUSYn	CHBUSYn	CHBUSYn
Access	R	R	R	R	R	R	R	R
Reset	0	0	0	0	0	0	0	0

Bit	7	6	5	4	3	2	1	0
	USRRDYn	USRRDYn	USRRDYn	USRRDYn	USRRDYn	USRRDYn	USRRDYn	USRRDYn
Access	R	R	R	R	R	R	R	R
Reset	0	0	0	0	0	0	0	0

Bits 15,14,13,12,11,10,9,8 – CHBUSYn Channel n Busy [n=7..0]
This bit is cleared when channel n is idle
This bit is set if an event on channel n has not been handled by all event users connected to channel n.

Bits 7,6,5,4,3,2,1,0 – USRRDYn Channel n User Ready [n=7..0]
This bit is cleared when at least one of the event users connected to the channel is not ready.
This bit is set when all event users connected to channel n are ready to handle incoming events on channel n.

© 2025 Microchip Technology Inc. and its subsidiaries

20.7.5. Interrupt Enable Clear

Name: INTENCLR
Offset: 0x10
Reset: 0x00000000
Property: Write-Protected

Table 20-7. Register Bit Attribute Legend

Symbol	Description	Symbol	Description	Symbol	Description
R	Readable bit	**HC**	Cleared by Hardware	(Grey cell)	Unimplemented
W	Writable bit	**HS**	Set by Hardware	**X**	Bit is unknown at Reset
K	Write to clear	**S**	Software settable bit	—	—

Bit	31	30	29	28	27	26	25	24
Access								
Reset								

Bit	23	22	21	20	19	18	17	16
Access								
Reset								

Bit	15	14	13	12	11	10	9	8
	EVDn	EVDn	EVDn	EVDn	EVDn	EVDn	EVDn	EVDn
Access	R/W	R/W	R/W	R/W	R/W	R/W	R/W	R/W
Reset	0	0	0	0	0	0	0	0

Bit	7	6	5	4	3	2	1	0
	OVRn	OVRn	OVRn	OVRn	OVRn	OVRn	OVRn	OVRn
Access	R/W	R/W	R/W	R/W	R/W	R/W	R/W	R/W
Reset	0	0	0	0	0	0	0	0

Bits 15,14,13,12,11,10,9,8 – EVDn Channel n Event Detection Interrupt Enable [n=7..0]

Writing a zero to this bit has no effect.
Writing a one to this bit will clear the Event Detected Channel n Interrupt Enable bit, which disables the Event Detected Channel n interrupt.

Value	Description
0	The Event Detected Channel n interrupt is disabled.
1	The Event Detected Channel n interrupt is enabled.

Bits 7,6,5,4,3,2,1,0 – OVRn Channel n Overrun Interrupt Enable [n=7..0]

Writing a zero to this bit has no effect.
Writing a one to this bit will clear the Overrun Channel n Interrupt Enable bit, which disables the Overrun Channel n interrupt.

Value	Description
0	The Overrun Channel n interrupt is disabled.
1	The Overrun Channel n interrupt is enabled.

© 2025 Microchip Technology Inc. and its subsidiaries

20.7.6. Interrupt Enable Set

Name: INTENSET
Offset: 0x14
Reset: 0x00000000
Property: Write-Protected

Table 20-8. Register Bit Attribute Legend

Symbol	Description	Symbol	Description	Symbol	Description
R	Readable bit	**HC**	Cleared by Hardware	(Grey cell)	Unimplemented
W	Writable bit	**HS**	Set by Hardware	**X**	Bit is unknown at Reset
K	Write to clear	**S**	Software settable bit	—	—

Bit	31	30	29	28	27	26	25	24
Access								
Reset								

Bit	23	22	21	20	19	18	17	16
Access								
Reset								

Bit	15	14	13	12	11	10	9	8
	EVDn	EVDn	EVDn	EVDn	EVDn	EVDn	EVDn	EVDn
Access	R/W	R/W	R/W	R/W	R/W	R/W	R/W	R/W
Reset	0	0	0	0	0	0	0	0

Bit	7	6	5	4	3	2	1	0
	OVRn	OVRn	OVRn	OVRn	OVRn	OVRn	OVRn	OVRn
Access	R/W	R/W	R/W	R/W	R/W	R/W	R/W	R/W
Reset	0	0	0	0	0	0	0	0

Bits 15,14,13,12,11,10,9,8 – EVDn Channel n Event Detection Interrupt Enable [n=7..0]
Writing a zero to this bit has no effect.
Writing a one to this bit will set the Event Detected Channel n Interrupt Enable bit, which enables the Event Detected Channel n interrupt.

Value	Description
0	The Event Detected Channel n interrupt is disabled.
1	The Event Detected Channel n interrupt is enabled.

Bits 7,6,5,4,3,2,1,0 – OVRn Channel n Overrun Interrupt Enable [n=7..0]
Writing a zero to this bit has no effect.
Writing a one to this bit will set the Overrun Channel n Interrupt Enable bit, which enables the Overrun Channel n interrupt.

Value	Description
0	The Overrun Channel n interrupt is disabled.
1	The Overrun Channel n interrupt is enabled.

© 2025 Microchip Technology Inc. and its subsidiaries

20.7.7. Interrupt Flag Status and Clear

Name: INTFLAG
Offset: 0x18
Reset: 0x00000000
Property: -

Table 20-9. Register Bit Attribute Legend

Symbol	Description	Symbol	Description	Symbol	Description
R	Readable bit	**HC**	Cleared by Hardware	(Grey cell)	Unimplemented
W	Writable bit	**HS**	Set by Hardware	**X**	Bit is unknown at Reset
K	Write to clear	**S**	Software settable bit	—	—

Bit	31	30	29	28	27	26	25	24
Access								
Reset								

Bit	23	22	21	20	19	18	17	16
Access								
Reset								

Bit	15	14	13	12	11	10	9	8
	EVDn	EVDn	EVDn	EVDn	EVDn	EVDn	EVDn	EVDn
Access	R/W	R/W	R/W	R/W	R/W	R/W	R/W	R/W
Reset	0	0	0	0	0	0	0	0

Bit	7	6	5	4	3	2	1	0
	OVRn	OVRn	OVRn	OVRn	OVRn	OVRn	OVRn	OVRn
Access	R/W	R/W	R/W	R/W	R/W	R/W	R/W	R/W
Reset	0	0	0	0	0	0	0	0

Bits 15,14,13,12,11,10,9,8 – EVDn Channel n Event Detection [n=7..0]
This flag is set on the next CLK_EVSYS_APB cycle when an event is being propagated through the channel, and an interrupt request will be generated if INTENCLR/SET.EVDn is one.
When the event channel path is asynchronous, the EVDn interrupt flag will not be set.
Writing a zero to this bit has no effect.
Writing a one to this bit will clear the Event Detected Channel n interrupt flag.

Bits 7,6,5,4,3,2,1,0 – OVRn Channel n Overrun [n=7..0]
This flag is set on the next CLK_EVSYS cycle after an overrun channel condition occurs, and an interrupt request will be generated if INTENCLR/SET.OVRn is one.
When the event channel path is asynchronous, the OVRn interrupt flag will not be set.
Writing a zero to this bit has no effect.
Writing a one to this bit will clear the Overrun Channel n interrupt flag.

© 2025 Microchip Technology Inc. and its subsidiaries

21. SERCOM – Serial Communication Interface

21.1. Overview

There are up to six instances of the Serial Communication interface (SERCOM) peripheral.

A SERCOM can be configured to support a number of modes: I^2C, SPI, and USART. When an instance of SERCOM is configured and enabled, all of the resources of that SERCOM instance will be dedicated to the selected mode.

The SERCOM serial engine consists of a transmitter and receiver, baud-rate generator and address matching functionality. It can use the internal generic clock or an external clock. Using an external clock allows the SERCOM to be operated in all Sleep modes.

21.2. Features

- Interface for configuring into one of the following:
  - I^2C – Two-wire serial interface
    SMBus™ compatible
  - SPI – Serial peripheral interface
  - USART – Universal synchronous and asynchronous serial receiver and transmitter
- Single transmit buffer and double receive buffer
- Baud-rate generator
- Address match/mask logic
- Operational in all sleep modes

See the Related Links for full feature lists of the interface configurations.

21.3. Block Diagram

Figure 21-1. SERCOM Block Diagram

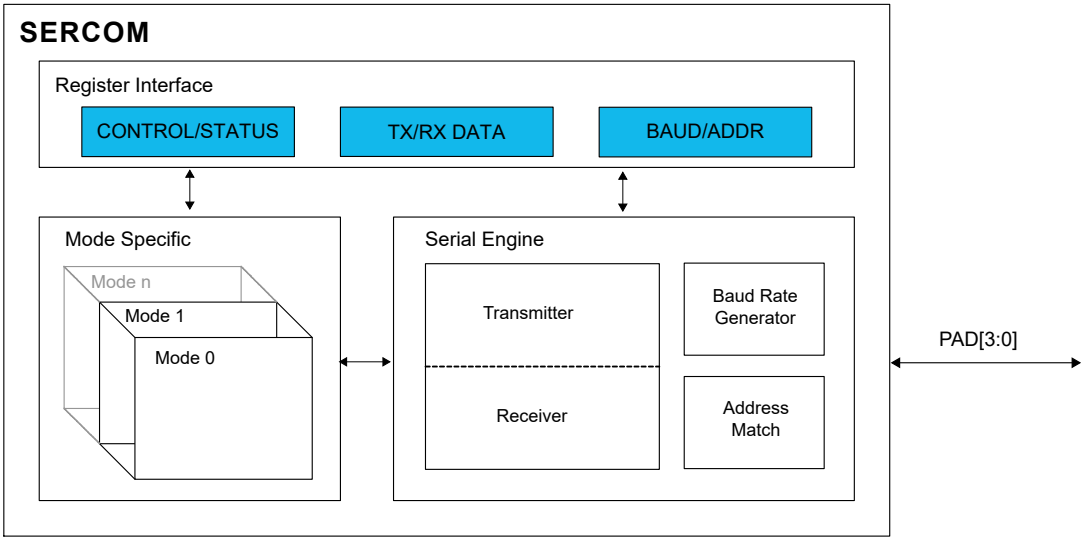

21.4. Signal Description

See the respective SERCOM mode chapters for details.

© 2025 Microchip Technology Inc. and its subsidiaries

21.5. Peripheral Dependencies

Table 21-1. Peripherals Configuration Summary

Peripheral Name	Base Address	IRQ Line	AHB Clock		APB Clock		Generic Clock	PAC		Events		
			Index	Enabled at Reset	Index	Enabled at Reset	Index	Index	Prot at Reset	User	Generator	SleepWalking
SERCOM0	0x42000800	7			2	N	13: CORE 12:SLOW	2	N			Y
SERCOM1	0x42000C00	8			3	N	14:CORE 12: SLOW	3	N			Y
SERCOM2	0x42001000	9			4	N	15:CORE 12: SLOW	4	N			Y
SERCOM3	0x42001400	10			5	N	16:CORE 12: SLOW	5	N			Y
SERCOM4	0x42001800	11			6	N	17:CORE 12: SLOW	6	N			Y
SERCOM5	0x42001C00	12			7	N	18:CORE 12: SLOW	7	N			Y

21.5.1. I/O Lines

Using the SERCOM I/O lines requires the I/O pins to be configured using port configuration (PORT).

The SERCOM has four internal pads, PAD[3:0], and the signals from I2C, SPI and USART are routed through these SERCOM pads via a multiplexer. The configuration of the multiplexer is available from the different SERCOM modes. Refer to the mode specific chapters for details.

21.5.2. Power Management

The SERCOM can operate in any Sleep mode provided the selected clock source is running. SERCOM interrupts can be configured to wake the device from sleep modes.

21.5.3. Clocks

The SERCOM bus clock (CLK_SERCOMx_APB) can be enabled and disabled in the Power Manager. Refer to *Peripheral Clock Masking* for details and default status of this clock.

The SERCOM uses two generic clocks: GCLK_SERCOMx_CORE and GCLK_SERCOMx_SLOW. The core clock (GCLK_SERCOMx_CORE) is required to clock the SERCOM while working as a host. The slow clock (GCLK_SERCOMx_SLOW) is only required for certain functions. See specific mode chapters for details.

These clocks must be configured and enabled in the Generic Clock Controller (GCLK) before using the SERCOM.

The generic clocks are asynchronous to the user interface clock (CLK_SERCOMx_APB). Due to this asynchronicity, writing to certain registers will require synchronization between the clock domains. Refer to Synchronization for details.

21.5.4. Interrupts

The interrupt request line is connected to the Interrupt Controller (NVIC). The NVIC must be configured before the SERCOM interrupts are used.

21.5.5. Events

Not applicable.

21.5.6. Debug Operation

When the CPU is halted in Debug mode, this peripheral will continue normal operation. If the peripheral is configured to require periodical service by the CPU through interrupts or similar,

© 2025 Microchip Technology Inc. and its subsidiaries

improper operation or data loss may result during debugging. This peripheral can be forced to halt operation during debugging - refer to the Debug Control (DBGCTRL) register for details.

21.5.7. Register Access Protection

All registers with write access can be write-protected optionally by the Peripheral Access Controller (PAC), except for the following registers:

- Interrupt Flag Clear and Status register (INTFLAG)
- Status register (STATUS)
- Data register (DATA)
- Address register (ADDR)

Optional write protection by the Peripheral Access Controller (PAC) is denoted by the "PAC Write Protection" property in each individual register description.

PAC write protection does not apply to accesses through an external debugger.

21.5.8. Analog Connections

Not applicable.

21.6. Functional Description

21.6.1. Principle of Operation

The basic structure of the SERCOM serial engine is shown in *SERCOM Serial Engine*. Labels in capital letters are synchronous to the system clock and accessible by the CPU; labels in lowercase letters can be configured to run on the GCLK_SERCOMx_CORE clock or an external clock.

Figure 21-2. SERCOM Serial Engine

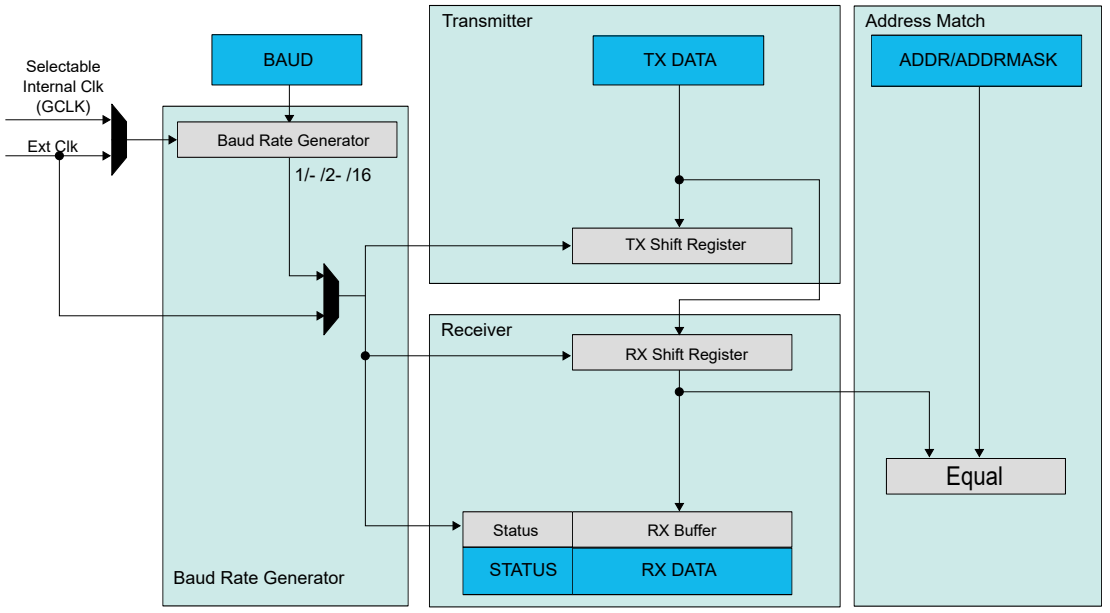

The transmitter consists of a single write buffer and a Shift register.

The receiver consists of a one-level (I^2C), or two-level (USART, SPI) receive buffer and a Shift register.

The baud-rate generator is capable of running on the GCLK_SERCOMx_CORE clock or an external clock.

Address matching logic is included for SPI and I^2C operation.

© 2025 Microchip Technology Inc. and its subsidiaries

21.6.2. Basic Operation

21.6.2.1. Initialization

The SERCOM must be configured to the desired mode by writing the Operating Mode bits in the Control A register (CTRLA.MODE) as shown in the table below.

Table 21-2. SERCOM Modes

CTRLA.MODE	Description
0x0	USART with external clock
0x1	USART with internal clock
0x2	SPI in client operation
0x3	SPI in host operation
0x4	I^2C client operation
0x5	I^2C host operation
0x6-0x7	Reserved

For further initialization information, see the respective SERCOM mode chapters:

21.6.2.2. Enabling, Disabling, and Resetting

This peripheral is enabled by writing '1' to the Enable bit in the Control A register (CTRLA.ENABLE), and disabled by writing '0' to it.

Writing '1' to the Software Reset bit in the Control A register (CTRLA.SWRST) will reset all registers of this peripheral to their initial states, except the DBGCTRL register, and the peripheral is disabled.

Refer to the CTRLA register description for details.

21.6.2.3. Clock Generation – Baud-Rate Generator

The baud-rate generator, as shown in the following figure, generates internal clocks for asynchronous and synchronous communication. The output frequency (f_{BAUD}) is determined by the Baud register (BAUD) setting and the baud reference frequency (f_{ref}). The baud reference clock is the serial engine clock, and it can be internal or external.

For asynchronous communication, the /16 (divide-by-16) output is used when transmitting, whereas the /1 (divide-by-1) output is used while receiving.

For synchronous communication, the /2 (divide-by-2) output is used.

This functionality is automatically configured, depending on the selected operating mode.

Figure 21-3. Baud Rate Generator

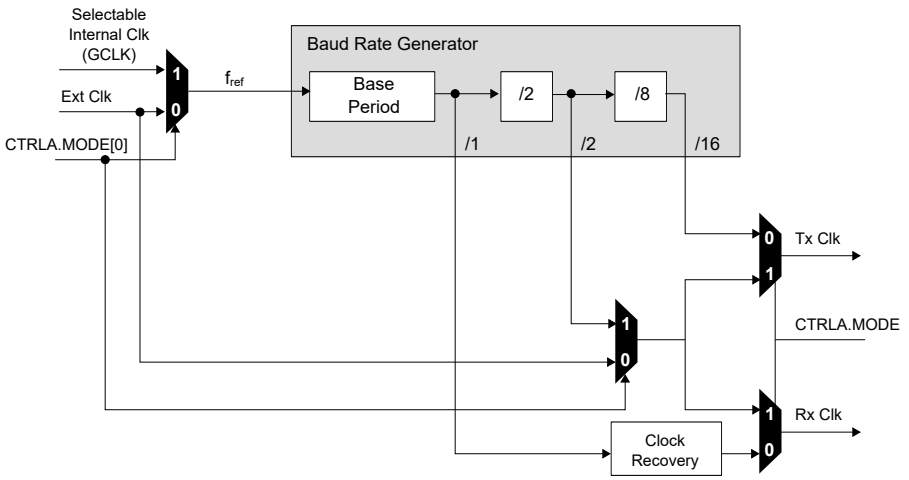

© 2025 Microchip Technology Inc. and its subsidiaries

The following table contains equations for the baud rate (in bits per second) and the BAUD register value for each operating mode.

For asynchronous operation, there are two modes:

- *Arithmetic mode*: the BAUD register value is 16 bits (0 to 65,535)
- *Fractional mode*: the BAUD register value is 13 bits, while the fractional adjustment is 3 bits. In this mode the BAUD setting must be greater than or equal to 1.

For synchronous operation, the BAUD register value is 8 bits (0 to 255).

Table 21-3. Baud Rate Equations

Operating Mode	Condition	Baud Rate (Bits Per Second)	BAUD Register Value Calculation
Asynchronous Arithmetic	$f_{BAUD} \leq \frac{f_{ref}}{16}$	$f_{BAUD} = \frac{f_{ref}}{16}\left(1 - \frac{BAUD}{65536}\right)$	$BAUD = 65536 \cdot \left(1 - S \cdot \frac{f_{BAUD}}{f_{ref}}\right)$
Asynchronous Fractional	$f_{BAUD} \leq \frac{f_{ref}}{S}$	$f_{BAUD} = \frac{f_{ref}}{S \cdot \left(BAUD + \frac{FP}{8}\right)}$	$BAUD = \frac{f_{ref}}{S \cdot f_{BAUD}} - \frac{FP}{8}$
Synchronous	$f_{BAUD} \leq \frac{f_{ref}}{2}$	$f_{BAUD} = \frac{f_{ref}}{2 \cdot (BAUD + 1)}$	$BAUD = \frac{f_{ref}}{2 \cdot f_{BAUD}} - 1$

S - Number of samples per bit, which can be 16, 8, or 3.

The Asynchronous Fractional option is used for auto-baud detection.

The baud rate error is represented by the following formula:

$$\text{Error} = 1 - \left(\frac{\text{ExpectedBaudRate}}{\text{ActualBaudRate}}\right)$$

21.6.3. Additional Features

21.6.3.1. Address Match and Mask

The SERCOM address match and mask feature is capable of matching either one address, two unique addresses, or a range of addresses with a mask, based on the mode selected. The match uses seven or eight bits, depending on the mode.

Address With Mask

An address written to the Address bits in the Address register (ADDR.ADDR), and a mask written to the Address Mask bits in the Address register (ADDR.ADDRMASK) will yield an address match. All bits that are masked are not included in the match. Note that writing the ADDR.ADDRMASK to 'all zeros' will match a single unique address, while writing ADDR.ADDRMASK to 'all ones' will result in all addresses being accepted.

Figure 21-4. Address With Mask

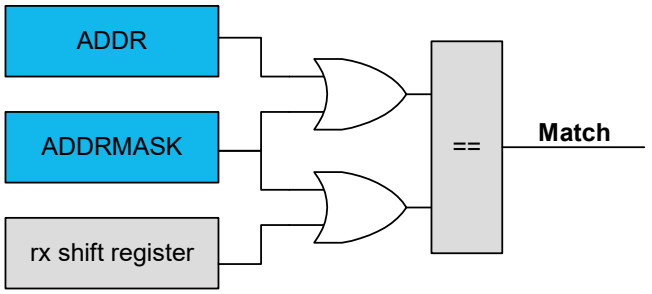

Two Unique Addresses

The two addresses written to ADDR and ADDRMASK will cause a match.

© 2025 Microchip Technology Inc. and its subsidiaries

Figure 21-5. Two Unique Addresses

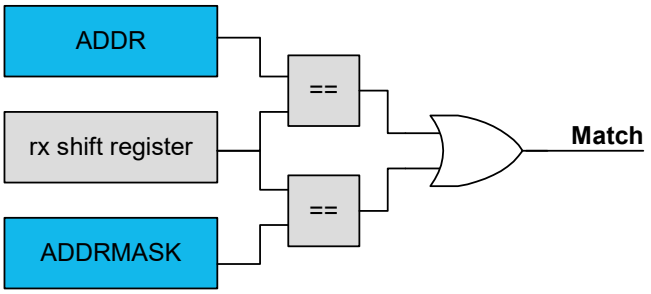

Address Range

The range of addresses between and including ADDR.ADDR and ADDR.ADDRMASK will cause a match. ADDR.ADDR and ADDR.ADDRMASK can be set to any two addresses, with ADDR.ADDR acting as the upper limit and ADDR.ADDRMASK acting as the lower limit.

Figure 21-6. Address Range

21.6.4. Interrupts

Interrupt sources are mode specific. See the respective SERCOM mode chapters for details.

Each interrupt source has its own Interrupt flag.

The Interrupt flag in the Interrupt Flag Status and Clear register (INTFLAG) will be set when the Interrupt condition is met.

Each interrupt can be individually enabled by writing '1' to the corresponding bit in the Interrupt Enable Set register (INTENSET), and disabled by writing '1' to the corresponding bit in the Interrupt Enable Clear register (INTENCLR).

An interrupt request is generated when the Interrupt flag is set and the corresponding interrupt is enabled. The interrupt request remains active until either the Interrupt flag is cleared, the interrupt is disabled, or the SERCOM is reset. For details on clearing Interrupt flags, refer to the INTFLAG register description.

The value of INTFLAG indicates which Interrupt condition occurred. The user must read the INTFLAG register to determine which Interrupt condition is present.

Note: Interrupts must be globally enabled for interrupt requests.

21.6.5. Events

Not applicable.

21.6.6. Sleep Mode Operation

The peripheral can operate in any Sleep mode where the selected serial clock is running. This clock can be external or generated by the internal baud-rate generator.

The SERCOM interrupts can be used to wake-up the device from Sleep modes. Refer to the different SERCOM mode chapters for details.

21.6.7. Synchronization

Due to asynchronicity between the main clock domain and the peripheral clock domains, some registers need to be synchronized when written or read.

© 2025 Microchip Technology Inc. and its subsidiaries

Required write synchronization is denoted by the "Write-Synchronized" property in the register description.

Required read synchronization is denoted by the "Read-Synchronized" property in the register description.

© 2025 Microchip Technology Inc. and its subsidiaries

22. SERCOM USART - SERCOM Synchronous and Asynchronous Receiver and Transmitter

22.1. Overview

The Universal Synchronous and Asynchronous Receiver and Transmitter (USART) is one of the available modes in the Serial Communication Interface (SERCOM).

The USART uses the SERCOM transmitter and receiver, see Block Diagram. Labels in uppercase letters are synchronous to CLK_SERCOMx_APB and accessible for CPU. Labels in lowercase letters can be programmed to run on the internal generic clock or an external clock.

The transmitter consists of a single write buffer, a Shift register, and control logic for different frame formats. The write buffer support data transmission without any delay between frames. The receiver consists of a two-level receive buffer and a Shift register. Status information of the received data is available for error checking. Data and clock recovery units ensure robust synchronization and noise filtering during asynchronous data reception.

22.2. USART Features

- Full-duplex operation
- Asynchronous (with clock reconstruction) or synchronous operation
- Internal or external clock source for asynchronous and synchronous operation
- Baud-rate generator
- Supports serial frames with 5, 6, 7, 8 or 9 data bits and 1 or 2 stop bits
- Odd or even parity generation and parity check
- Selectable LSB- or MSB-first data transfer
- Buffer overflow and frame error detection
- Noise filtering, including false start-bit detection and digital low-pass filter
- Can operate in all sleep modes
- Operation at speeds up to half the system clock for internally generated clocks
- Operation at speeds up to the system clock for externally generated clocks
- Start-of-frame detection

© 2025 Microchip Technology Inc. and its subsidiaries

22.3. Block Diagram

Figure 22-1. USART Block Diagram

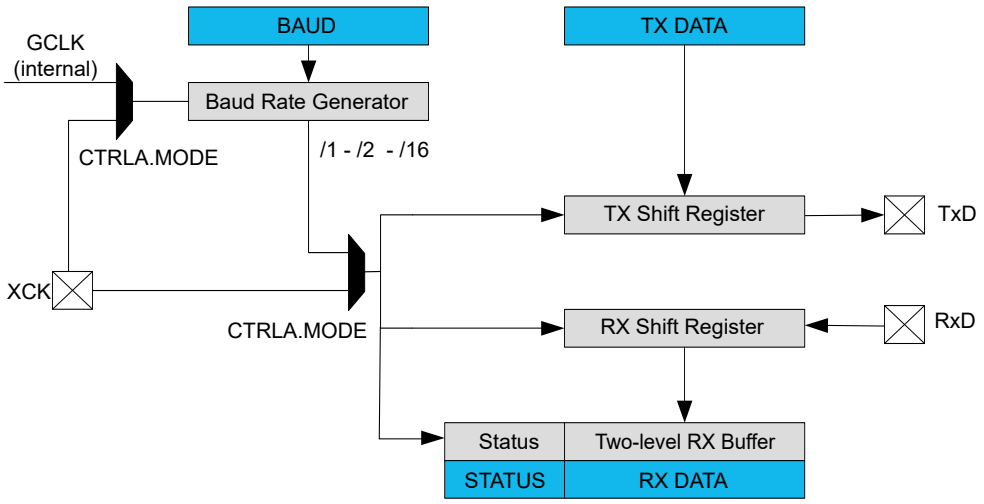

22.4. Signal Description

Table 22-1. SERCOM USART Signals

Signal Name	Type	Description
PAD[3:0]	Digital I/O	General SERCOM pins

One signal can be mapped to one of several pins.

22.5. Product Dependencies

To use this peripheral, other parts of the system must be configured correctly, as described below.

22.5.1. I/O Lines

Using the USART's I/O lines requires the I/O pins to be configured using the I/O Pin Controller (PORT).

When the SERCOM is used in USART mode, the SERCOM controls the direction and value of the I/O pins according to the table below. If the receiver or transmitter is disabled, these pins can be used for other purposes.

Table 22-2. USART Pin Configuration

Pin	Pin Configuration
TxD	Output
RxD	Input
XCK	Output or input

The combined configuration of PORT and the Transmit Data Pinout and Receive Data Pinout bit fields in the Control A register (CTRLA.TXPO and CTRLA.RXPO, respectively) will define the physical position of the USART signals in Table 22-2.

22.5.2. Power Management

This peripheral can continue to operate in any Sleep mode where its source clock is running. The interrupts can wake-up the device from Sleep modes.

© 2025 Microchip Technology Inc. and its subsidiaries

22.5.3. Clocks

The SERCOM bus clock (CLK_SERCOMx_APB) can be enabled and disabled in the Power Manager. Refer to *Peripheral Clock Masking* for details and default status of this clock.

A generic clock (GCLK_SERCOMx_CORE) is required to clock the SERCOMx_CORE. This clock must be configured and enabled in the Generic Clock Controller before using the SERCOMx_CORE. Refer to *GCLK - Generic Clock Controller* for details.

This generic clock is asynchronous to the bus clock (CLK_SERCOMx_APB). Therefore, writing to certain registers will require synchronization to the clock domains. Refer to *Synchronization* for further details.

22.5.4. Interrupts

The interrupt request line is connected to the Interrupt Controller. In order to use interrupt requests of this peripheral, the Interrupt Controller (NVIC) must be configured first. Refer to *Nested Vector Interrupt Controller* for details.

22.5.5. Events

Not applicable.

22.5.6. Debug Operation

When the CPU is halted in Debug mode, this peripheral will continue normal operation. If the peripheral is configured to require periodical service by the CPU through interrupts or similar, improper operation or data loss may result during debugging. This peripheral can be forced to halt operation during debugging - refer to the Debug Control (DBGCTRL) register for details.

22.5.7. Register Access Protection

Registers with write access can be write-protected optionally by the Peripheral Access Controller (PAC).

PAC write protection is not available for the following registers:

- Interrupt Flag Clear and Status register (INTFLAG)
- Status register (STATUS)
- Data register (DATA)

Optional PAC write protection is denoted by the "PAC Write-Protection" property in each individual register description.

Write-protection does not apply to accesses through an external debugger.

22.5.8. Analog Connections

Not applicable.

22.6. Functional Description

22.6.1. Principle of Operation

The USART uses the following lines for data transfer:

- RxD for receiving
- TxD for transmitting
- XCK for the transmission clock in synchronous operation

USART data transfer is frame based. A serial frame consists of:

- 1 start bit

© 2025 Microchip Technology Inc. and its subsidiaries

- From 5 to 9 data bits (MSB or LSB first)
- No, even or odd parity bit
- 1 or 2 stop bits

A frame starts with the Start bit followed by one character of Data bits. If enabled, the parity bit is inserted after the Data bits and before the first Stop bit. After the stop bit(s) of a frame, either the next frame can follow immediately, or the communication line can return to the Idle (high) state. The figure below illustrates the possible frame formats. Values inside brackets ([x]) denote optional bits.

Figure 22-2. Frame Formats

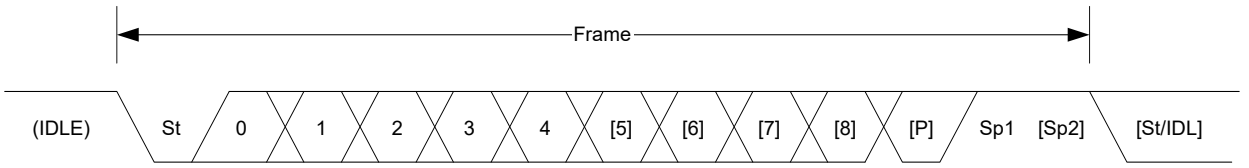

St Start bit. Signal is always low.

n, [n] Data bits. 0 to [5..9]

[P] Parity bit. Either odd or even.

Sp, [Sp] Stop bit. Signal is always high.

IDLE No frame is transferred on the communication line. Signal is always high in this state.

22.6.2. Basic Operation

22.6.2.1. Initialization

The following registers are enable-protected, meaning they can only be written when the USART is disabled (CTRL.ENABLE=0):

- Control A register (CTRLA), except the Enable (ENABLE) and Software Reset (SWRST) bits.
- Control B register (CTRLB), except the Receiver Enable (RXEN) and Transmitter Enable (TXEN) bits.
- Baud register (BAUD)

When the USART is enabled or is being enabled (CTRLA.ENABLE=1), any writing attempt to these registers will be discarded. If the peripheral is being disabled, writing to these registers will be executed after disabling is completed. Enable-protection is denoted by the "Enable-Protection" property in the register description.

Before the USART is enabled, it must be configured by these steps:

1. Select either external (0x0) or internal clock (0x1) by writing the Operating Mode value in the CTRLA register (CTRLA.MODE).
2. Select either Asynchronous (0) or Synchronous (1) Communication mode by writing the Communication Mode bit in the CTRLA register (CTRLA.CMODE).
3. Select pin for receive data by writing the Receive Data Pinout value in the CTRLA register (CTRLA.RXPO).
4. Select pads for the transmitter and external clock by writing the Transmit Data Pinout bit in the CTRLA register (CTRLA.TXPO).
5. Configure the Character Size field in the CTRLB register (CTRLB.CHSIZE) for character size.
6. Set the Data Order bit in the CTRLA register (CTRLA.DORD) to determine MSB- or LSB-first data transmission.
7. To use parity mode:

© 2025 Microchip Technology Inc. and its subsidiaries

a. Enable Parity mode by writing 0x1 to the Frame Format field in the CTRLA register (CTRLA.FORM).
b. Configure the Parity Mode bit in the CTRLB register (CTRLB.PMODE) for even or odd parity.

8. Configure the number of stop bits in the Stop Bit Mode bit in the CTRLB register (CTRLB.SBMODE).
9. When using an internal clock, write the Baud register (BAUD) to generate the desired baud rate.
10. Enable the transmitter and receiver by writing '1' to the Receiver Enable and Transmitter Enable bits in the CTRLB register (CTRLB.RXEN and CTRLB.TXEN).

22.6.2.2. Enabling, Disabling, and Resetting

This peripheral is enabled by writing '1' to the Enable bit in the Control A register (CTRLA.ENABLE), and disabled by writing '0' to it.

Writing '1' to the Software Reset bit in the Control A register (CTRLA.SWRST) will reset all registers of this peripheral to their initial states, except the DBGCTRL register, and the peripheral is disabled.

Refer to the CTRLA register description for details.

22.6.2.3. Clock Generation and Selection

For both Synchronous and Asynchronous modes, the clock used for shifting and sampling data can be generated internally by the SERCOM baud-rate generator or supplied externally through the XCK line.

The Synchronous mode is selected by writing a '1' to the Communication Mode bit in the Control A register (CTRLA.CMODE), the Asynchronous mode is selected by writing '0' to CTRLA.CMODE.

The internal clock source is selected by writing '1' to the Operation Mode bit field in the Control A register (CTRLA.MODE), the external clock source is selected by writing '0' to CTRLA.MODE.

The SERCOM baud-rate generator is configured as in the following figure.

In Asynchronous mode (CTRLA.CMODE=0), the 16-bit Baud register value is used.

In Synchronous mode (CTRLA.CMODE=1), the eight LSBs of the Baud register are used. Refer to *Clock Generation – Baud-Rate Generator* for details on configuring the baud rate.

Figure 22-3. Clock Generation

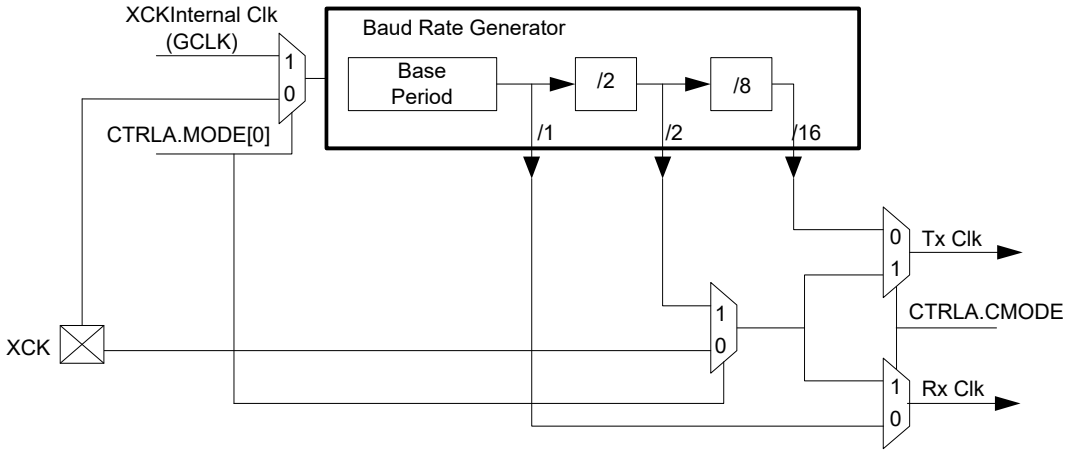

22.6.2.3.1. Synchronous Clock Operation

In Synchronous mode, the CTRLA.MODE bit field determines whether the transmission clock line (XCK) serves either as input or output. The dependency between clock edges, data sampling, and data change is the same for internal and external clocks. Data input on the RxD pin is sampled at the opposite XCK clock edge when data is driven on the TxD pin.

© 2025 Microchip Technology Inc. and its subsidiaries

The Clock Polarity bit in the Control A register (CTRLA.CPOL) selects which XCK clock edge is used for RxD sampling, and which is used for TxD change:

When CTRLA.CPOL is '0', the data will be changed on the rising edge of XCK, and sampled on the falling edge of XCK.

When CTRLA.CPOL is '1', the data will be changed on the falling edge of XCK, and sampled on the rising edge of XCK.

Figure 22-4. Synchronous Mode XCK Timing

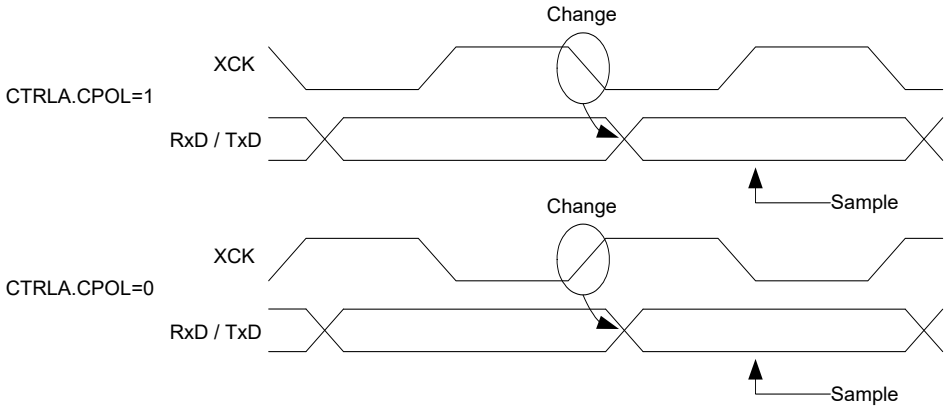

When the clock is provided through XCK (CTRLA.MODE=0x0), the Shift registers operate directly on the XCK clock. This means that XCK is not synchronized with the system clock and, therefore, can operate at frequencies up to the system frequency.

22.6.2.4. Data Register

The USART Transmit Data register (TxDATA) and USART Receive Data register (RxDATA) share the same I/O address, referred to as the Data register (DATA). Writing the DATA register will update the TxDATA register. Reading the DATA register will return the contents of the RxDATA register.

22.6.2.5. Data Transmission

Data transmission is initiated by writing the data to be sent into the DATA register. Then, the data in TxDATA will be moved to the shift register when the shift register is empty and ready to send a new frame. After the shift register is loaded with data, the data frame will be transmitted.

When the entire data frame including stop bit has been transmitted (both the Tx buffer and the shift register are empty) and no new data was written to DATA register, the Transmit Complete interrupt flag in the Interrupt Flag Status and Clear register (INTFLAG.TXC) will be set, and the optional interrupt will be generated.

The Data Register Empty flag in the Interrupt Flag Status and Clear register (INTFLAG.DRE) indicates that the register is empty and ready for new data. The DATA register should only be written to when INTFLAG.DRE is set.

22.6.2.5.1. Disabling the Transmitter

The transmitter is disabled by writing '0' to the Transmitter Enable bit in the CTRLB register (CTRLB.TXEN).

Disabling the transmitter will complete only after any ongoing and pending transmissions are completed, that is, there is no data in the Transmit Shift register and TxDATA to transmit.

22.6.2.6. Data Reception

The receiver accepts data when a valid Start bit is detected. Each bit following the Start bit will be sampled according to the baud rate or XCK clock, and shifted into the receive Shift register until the first Stop bit of a frame is received. The second Stop bit will be ignored by the receiver.

© 2025 Microchip Technology Inc. and its subsidiaries

When the first Stop bit is received and a complete serial frame is present in the Receive Shift register, the contents of the Shift register will be moved into the two-level receive buffer. Then, the Receive Complete Interrupt flag in the Interrupt Flag Status and Clear register (INTFLAG.RXC) will be set, and the optional interrupt can be generated.

The received data can be read from the DATA register when the Receive Complete Interrupt flag is set.

22.6.2.6.1. Disabling the Receiver

Writing '0' to the Receiver Enable bit in the CTRLB register (CTRLB.RXEN) will disable the receiver, flush the two-level receive buffer, and data from ongoing receptions will be lost.

22.6.2.6.2. Error Bits

The USART receiver has three error bits in the Status (STATUS) register: Frame Error (FERR), Buffer Overflow (BUFOVF), and Parity Error (PERR). Once an error happens, the corresponding error bit will be set until it is cleared by writing `'1'` to it. These bits are also cleared automatically when the receiver is disabled.

There are two methods for buffer overflow notification, selected by the Immediate Buffer Overflow Notification bit in the Control A register (CTRLA.IBON):

When CTRLA.IBON=1, STATUS.BUFOVF is raised immediately upon buffer overflow. Software can then empty the receive FIFO by reading RxDATA, until the Receiver Complete Interrupt flag (INTFLAG.RXC) is cleared.

When CTRLA.IBON=0, the Buffer Overflow condition is attending data through the receive FIFO, which will then set the INTFLAG.ERROR bit. After the received data is read, STATUS.BUFOVF (and INTFLAG.ERROR) will be set along with INTFLAG.RXC.

22.6.2.6.3. Asynchronous Data Reception

The USART includes a clock recovery and data recovery unit for handling asynchronous data reception.

The clock recovery logic can synchronize the incoming asynchronous serial frames at the RxD pin to the internally generated baud-rate clock.

The data recovery logic samples and applies a low-pass filter to each incoming bit, thereby improving the noise immunity of the receiver.

22.6.2.6.4. Asynchronous Operational Range

The operational range of the asynchronous reception depends on the accuracy of the internal baud-rate clock, the rate of the incoming frames, and the frame size (in number of bits). In addition, the operational range of the receiver is depending on the difference between the received bit rate and the internally generated baud rate. If the baud rate of an external transmitter is too high or too low compared to the internally generated baud rate, the receiver will not be able to synchronize the frames to the start bit.

There are two possible sources for a mismatch in baud rate: First, the reference clock will always have some minor instability. Second, the baud-rate generator cannot always do an exact division of the reference clock frequency to get the baud rate desired. In this case, the BAUD register value should be set to give the lowest possible error. Refer to *Clock Generation – Baud-Rate Generator* for details.

Recommended maximum receiver baud-rate errors for various character sizes are shown in the table below.

Table 22-3. Asynchronous Receiver Error for 16-fold Oversampling

D (Data bits+Parity)	R_{SLOW} [%]	R_{FAST} [%]	Max. total error [%]	Recommended max. Rx error [%]
5	91.42	107.69	+5.88/-7.69	±2.5

© 2025 Microchip Technology Inc. and its subsidiaries

Table 22-3. Asynchronous Receiver Error for 16-fold Oversampling (continued)

D (Data bits+Parity)	R_{SLOW} [%]	R_{FAST} [%]	Max. total error [%]	Recommended max. Rx error [%]
6	94.92	106.67	+5.08/-6.67	±2.0
7	95.52	105.88	+4.48/-5.88	±2.0
8	96.00	105.26	+4.00/-5.26	±2.0
9	96.39	104.76	+3.61/-4.76	±1.5
10	96.70	104.35	+3.30/-4.35	±1.5

The following equations calculate the ratio of the incoming data rate and internal receiver baud rate:

$$R_{\mathrm{SLOW}} = \frac{16(D+1)}{16(D+1)+6} \quad , \qquad R_{\mathrm{FAST}} = \frac{16(D+2)}{16(D+1)+8}$$

- R_{SLOW} is the ratio of the slowest incoming data rate that can be accepted in relation to the receiver baud rate
- R_{FAST} is the ratio of the fastest incoming data rate that can be accepted in relation to the receiver baud rate
- D is the sum of character size and parity size (D = 5 to 10 bits)

The recommended maximum Rx Error assumes that the receiver and transmitter equally divide the maximum total error. Its connection to the SERCOM Receiver error acceptance is depicted in this figure:

Figure 22-5. USART Rx Error Calculation

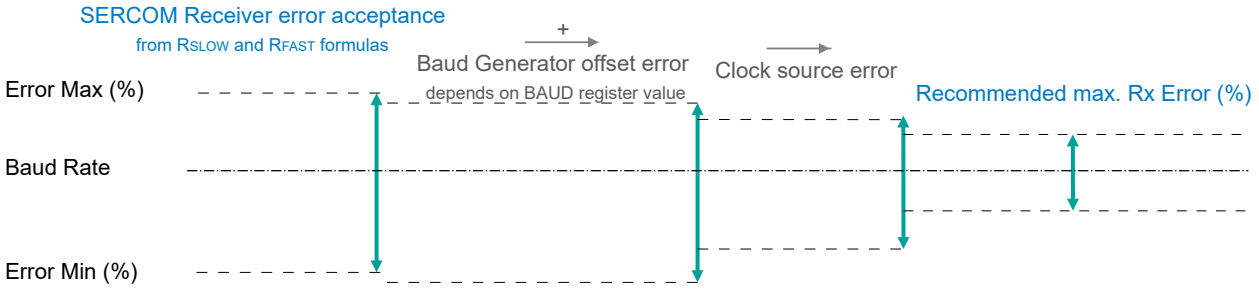

The recommendation values in the table above accommodate errors of the clock source and the baud generator. The following figure gives an example for a baud rate of 3Mbps:

© 2025 Microchip Technology Inc. and its subsidiaries

Figure 22-6. USART Rx Error Calculation Example

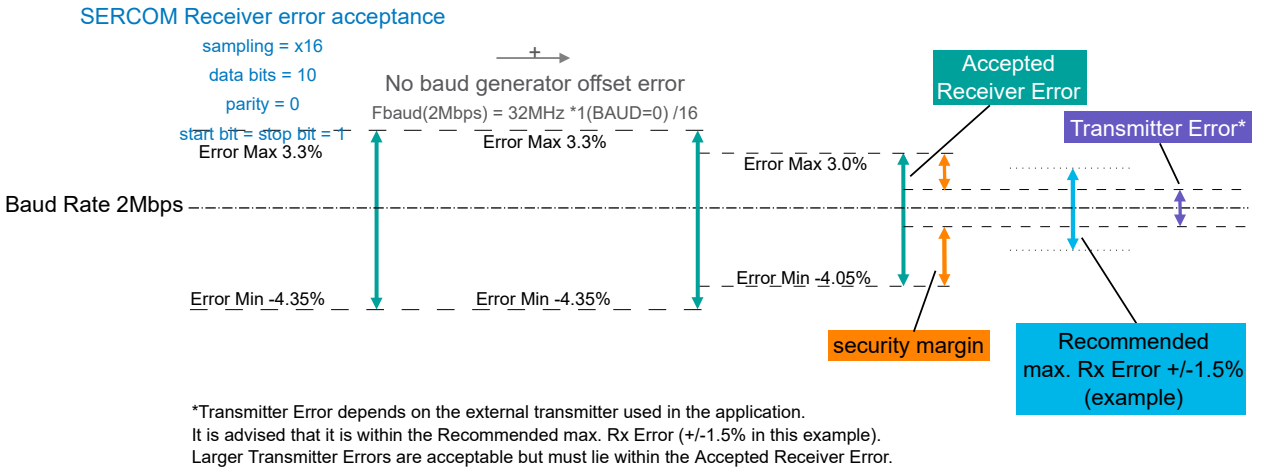

22.6.3. Additional Features

22.6.3.1. Parity

Even or odd parity can be selected for error checking by writing 0x1 to the Frame Format bit field in the Control A register (CTRLA.FORM).

If *even parity* is selected (CTRLB.PMODE=0), the Parity bit of an outgoing frame is '1' if the data contains an odd number of bits that are '1', making the total number of '1' even.

If *odd parity* is selected (CTRLB.PMODE=1), the Parity bit of an outgoing frame is '1' if the data contains an even number of bits that are '0', making the total number of '1' odd.

When parity checking is enabled, the parity checker calculates the parity of the data bits in incoming frames and compares the result with the Parity bit of the corresponding frame. If a parity error is detected, the Parity Error bit in the Status register (STATUS.PERR) is set.

22.6.3.2. Loop-Back Mode

For Loop-Back mode, configure the Receive Data Pinout (CTRLA.RXPO) and Transmit Data Pinout (CTRLA.TXPO) to use the same data pins for transmit and receive. The loop-back is through the pad, so the signal is also available externally.

22.6.3.3. Start-of-Frame Detection

The USART start-of-frame detector can wake-up the CPU when it detects a Start bit. In Standby Sleep mode, the internal fast start-up oscillator must be selected as the GCLK_SERCOMx_CORE source, otherwise the frame data from the initial Start-of-Frame detection event may get corrupted and any succeeding frames until the oscillator clock has started up and stable due to baud rate mismatch issues.

When a 1-to-0 transition is detected on RxD, the 8 MHz Internal Oscillator is powered up and the USART clock is enabled. After start-up, the rest of the data frame can be received, provided that the baud rate is slow enough in relation to the fast start-up internal oscillator start-up time. Refer to the *Electrical Characteristics* chapters for details. The start-up time of this oscillator varies with supply voltage and temperature.

The USART start-of-frame detection works both in Asynchronous and Synchronous modes. It is enabled by writing ‘1’ to the Start of Frame Detection Enable bit in the Control B register (CTRLB.SFDE).

© 2025 Microchip Technology Inc. and its subsidiaries

If the Receive Start Interrupt Enable bit in the Interrupt Enable Set register (INTENSET.RXS) is set, the Receive Start interrupt is generated immediately when a start is detected.

When using start-of-frame detection without the Receive Start interrupt, start detection will force the 8 MHz internal oscillator and USART clock active while the frame is being received. In this case, the CPU will not wake up until the receive complete interrupt is generated.

22.6.4. Interrupts

The USART has the following interrupt sources. These are asynchronous interrupts, and can wake up the device from any sleep mode:

- Data Register Empty (DRE)
- Receive Complete (RXC)
- Transmit Complete (TXC)
- Receive Start (RXS)

Each interrupt source has its own interrupt flag. The interrupt flag in the Interrupt Flag Status and Clear register (INTFLAG) will be set when the interrupt condition is met. Each interrupt can be individually enabled by writing '1' to the corresponding bit in the Interrupt Enable Set register (INTENSET), and disabled by writing '1' to the corresponding bit in the Interrupt Enable Clear register (INTENCLR).

An interrupt request is generated when the interrupt flag is set and if the corresponding interrupt is enabled. The interrupt request remains active until either the interrupt flag is cleared, the interrupt is disabled, or the USART is reset. For details on clearing interrupt flags, refer to the INTFLAG register description.

The USART has one common interrupt request line for all the interrupt sources. The value of INTFLAG indicates which interrupt is executed. Note that interrupts must be globally enabled for interrupt requests. Refer to *Nested Vector Interrupt Controller* for details.

22.6.5. Sleep Mode Operation

The behavior in Sleep mode is depending on the clock source and the Run In Standby bit in the Control A register (CTRLA.RUNSTDBY):

- Internal clocking, CTRLA.RUNSTDBY=1: GCLK_SERCOMx_CORE can be enabled in all Sleep modes. Any interrupt can wake-up the device.
- External clocking, CTRLA.RUNSTDBY=1: The Receive Complete interrupt(s) can wake-up the device.
- Internal clocking, CTRLA.RUNSTDBY=0: Internal clock will be disabled, after any ongoing transfer was completed. The Receive Complete interrupt(s) can wake-up the device.
- External clocking, CTRLA.RUNSTDBY=0: External clock will be disconnected, after any ongoing transfer was completed. All reception will be dropped.

22.6.6. Synchronization

Due to asynchronicity between the main clock domain and the peripheral clock domains, some registers need to be synchronized when written or read.

Required write synchronization is denoted by the "Write-Synchronized" property in the register description.

Required read synchronization is denoted by the "Read-Synchronized" property in the register description.

© 2025 Microchip Technology Inc. and its subsidiaries

23. Register Summary

Offset	Name	Bit Pos.	7	6	5	4	3	2	1	0
0x00	CTRLA	7:0	RUNSTDBY			MODE[2:0]			ENABLE	SWRST
		15:8								IBON
		23:16			RXPO[1:0]					TXPO
		31:24		DORD	CPOL	CMODE	FORM[3:0]			
0x04	CTRLB	7:0		SBMODE				CHSIZE[2:0]		
		15:8			PMODE				SFDE	
		23:16							RXEN	TXEN
		31:24								
0x08	DBGCTRL	7:0								DBGSTOP
0x09	Reserved									
0x0A	BAUD	7:0	BAUD[7:0]							
		15:8	BAUD[15:8]							
0x0C	INTENCLR	7:0					RXS	RXC	TXC	DRE
0x0D	INTENSET	7:0					RXS	RXC	TXC	DRE
0x0E	INTFLAG	7:0					RXS	RXC	TXC	DRE
0x0F	Reserved									
0x10	STATUS	7:0						BUFOVF	FERR	PERR
		15:8	SYNCBUSY							
0x12 ... 0x17	Reserved									
0x18	DATA	7:0	DATA[7:0]							
		15:8								DATA[8]

© 2025 Microchip Technology Inc. and its subsidiaries

23.1. Control A

Name: CTRLA
Offset: 0x00
Reset: 0x00000000
Property: PAC Write-Protection, Enable-Protected, Write-Synchronized

Table 23-1. Register Bit Attribute Legend

Symbol	Description	Symbol	Description	Symbol	Description
R	Readable bit	**HC**	Cleared by Hardware	(Grey cell)	Unimplemented
W	Writable bit	**HS**	Set by Hardware	**X**	Bit is unknown at Reset
K	Write to clear	**S**	Software settable bit	—	—

Bit	31	30	29	28	27	26	25	24
		DORD	CPOL	CMODE	FORM[3:0]			
Access		R/W	R/W	R/W	R/W	R/W	R/W	R/W
Reset		0	0	0	0	0	0	0

Bit	23	22	21	20	19	18	17	16
			RXPO[1:0]					TXPO
Access			R/W	R/W				R/W
Reset			0	0				0

Bit	15	14	13	12	11	10	9	8
								IBON
Access								R
Reset								0

Bit	7	6	5	4	3	2	1	0
	RUNSTDBY			MODE[2:0]			ENABLE	SWRST
Access	R/W			R/W	R/W	R/W	R/W	R/W
Reset	0			0	0	0	0	0

Bit 30 – DORD Data Order
This bit selects the data order when a character is shifted out from the Data register.
This bit is not synchronized.

Value	Description
0	MSB is transmitted first.
1	LSB is transmitted first.

Bit 29 – CPOL Clock Polarity
This bit selects the relationship between data output change and data input sampling in synchronous mode.
This bit is not synchronized.

CPOL	TxD Change	RxD Sample
0x0	Rising XCK edge	Falling XCK edge
0x1	Falling XCK edge	Rising XCK edge

Bit 28 – CMODE Communication Mode
This bit selects asynchronous or synchronous communication.
This bit is not synchronized.

© 2025 Microchip Technology Inc. and its subsidiaries

Value	Description
0	Asynchronous communication.
1	Synchronous communication.

Bits 27:24 – FORM[3:0] Frame Format
These bits define the frame format.
These bits are not synchronized.

FORM[3:0]	Description
0x0	USART frame
0x1	USART frame with parity
0x2-0x0xF	Reserved

Bits 21:20 – RXPO[1:0] Receive Data Pinout
These bits define the receive data (RxD) pin configuration.
These bits are not synchronized.

RXPO[1:0]	Name	Description
0x0	PAD[0]	SERCOM PAD[0] is used for data reception
0x1	PAD[1]	SERCOM PAD[1] is used for data reception
0x2	PAD[2]	SERCOM PAD[2] is used for data reception
0x3	PAD[3]	SERCOM PAD[3] is used for data reception

Bit 16 – TXPO Transmit Data Pinout
These bits define the transmit data (TxD) and XCK pin configurations.
This bit is not synchronized.

TXPO	TxD Pin Location	XCK Pin Location (When Applicable)
0x0	SERCOM PAD[0]	SERCOM PAD[1]
0x1	SERCOM PAD[2]	SERCOM PAD[3]

Bit 8 – IBON Immediate Buffer Overflow Notification
This bit controls when the buffer overflow status bit (STATUS.BUFOVF) is asserted when a buffer overflow occurs.

Value	Description
0	STATUS.BUFOVF is asserted when it occurs in the data stream.
1	STATUS.BUFOVF is asserted immediately upon buffer overflow.

Bit 7 – RUNSTDBY Run In Standby
This bit defines the functionality in standby sleep mode.
This bit is not synchronized.

RUNSTDBY	External Clock	Internal Clock
0x0	External clock is disconnected when ongoing transfer is finished. All reception is dropped.	Generic clock is disabled when ongoing transfer is finished. The device can wake up on Receive Start or Transfer Complete interrupt.
0x1	Wake on Receive Start or Receive Complete interrupt.	Generic clock is enabled in all sleep modes. Any interrupt can wake up the device.

Bits 4:2 – MODE[2:0] Operating Mode
These bits select the USART serial communication interface of the SERCOM.
These bits are not synchronized.

Value	Description
0x0	USART with external clock
0x1	USART with internal clock

© 2025 Microchip Technology Inc. and its subsidiaries

Bit 1 – ENABLE Enable

Due to synchronization, there is delay from writing CTRLA.ENABLE until the peripheral is enabled/disabled. The value written to CTRLA.ENABLE will read back immediately and the Enable Synchronization Busy bit in the Synchronization Busy register (SYNCBUSY.ENABLE) will be set. SYNCBUSY.ENABLE is cleared when the operation is complete.
This bit is not enable-protected.

Value	Description
0	The peripheral is disabled or being disabled.
1	The peripheral is enabled or being enabled.

Bit 0 – SWRST Software Reset

Writing '0' to this bit has no effect.
Writing '1' to this bit resets all registers in the SERCOM, except DBGCTRL, to their initial state, and the SERCOM will be disabled.
Writing '1' to CTRLA.SWRST will always take precedence, meaning that all other writes in the same write-operation will be discarded. Any register write access during the ongoing reset will result in an APB error. Reading any register will return the reset value of the register.
Due to synchronization, there is a delay from writing CTRLA.SWRST until the reset is complete. CTRLA.SWRST and SYNCBUSY.SWRST will both be cleared when the reset is complete.
This bit is not enable-protected.

Value	Description
0	There is no reset operation ongoing.
1	The reset operation is ongoing.

© 2025 Microchip Technology Inc. and its subsidiaries

23.2. Control B

Name: CTRLB
Offset: 0x04
Reset: 0x00000000
Property: PAC Write-Protection, Enable-Protected, Write-Synchronized

Table 23-2. Register Bit Attribute Legend

Symbol	Description	Symbol	Description	Symbol	Description
R	Readable bit	**HC**	Cleared by Hardware	(Grey cell)	Unimplemented
W	Writable bit	**HS**	Set by Hardware	**X**	Bit is unknown at Reset
K	Write to clear	**S**	Software settable bit	—	—

Bit	31	30	29	28	27	26	25	24
Access								
Reset								

Bit	23	22	21	20	19	18	17	16
							RXEN	TXEN
Access							R/W	R/W
Reset							0	0

Bit	15	14	13	12	11	10	9	8
			PMODE				SFDE	
Access			R/W				R/W	
Reset			0				0	

Bit	7	6	5	4	3	2	1	0
		SBMODE				CHSIZE[2:0]		
Access		R/W				R/W	R/W	R/W
Reset		0				0	0	0

Bit 17 – RXEN Receiver Enable

Writing '0' to this bit will disable the USART receiver. Disabling the receiver will flush the receive buffer and clear the FERR, PERR and BUFOVF bits in the STATUS register.
Writing '1' to CTRLB.RXEN when the USART is disabled will set CTRLB.RXEN immediately. When the USART is enabled, CTRLB.RXEN will be cleared, and SYNCBUSY.CTRLB will be set and remain set until the receiver is enabled. When the receiver is enabled, CTRLB.RXEN will read back as '1'.
Writing '1' to CTRLB.RXEN when the USART is enabled will set SYNCBUSY.CTRLB, which will remain set until the receiver is enabled, and CTRLB.RXEN will read back as '1'.
This bit is not enable-protected.

Value	Description
0	The receiver is disabled or being enabled.
1	The receiver is enabled or will be enabled when the USART is enabled.

Bit 16 – TXEN Transmitter Enable

Writing '0' to this bit will disable the USART transmitter. Disabling the transmitter will not become effective until ongoing and pending transmissions are completed.
Writing '1' to CTRLB.TXEN when the USART is disabled will set CTRLB.TXEN immediately. When the USART is enabled, CTRLB.TXEN will be cleared, and SYNCBUSY.CTRLB will be set and remain set until the transmitter is enabled. When the transmitter is enabled, CTRLB.TXEN will read back as '1'.

© 2025 Microchip Technology Inc. and its subsidiaries

Writing '1' to CTRLB.TXEN when the USART is enabled will set SYNCBUSY.CTRLB, which will remain set until the receiver is enabled, and CTRLB.TXEN will read back as '1'.
This bit is not enable-protected.

Value	Description
0	The transmitter is disabled or being enabled.
1	The transmitter is enabled or will be enabled when the USART is enabled.

Bit 13 – PMODE Parity Mode

This bit selects the type of parity used when parity is enabled (CTRLA.FORM is '1'). The transmitter will automatically generate and send the parity of the transmitted data bits within each frame. The receiver will generate a parity value for the incoming data and parity bit, compare it to the parity mode and, if a mismatch is detected, STATUS.PERR will be set.
This bit is not synchronized.

Value	Description
0	Even parity.
1	Odd parity.

Bit 9 – SFDE Start of Frame Detection Enable

This bit controls whether the start-of-frame detector will wake up the device when a start bit is detected on the RxD line.
This bit is not synchronized.

SFDE	INTENSET.RXS	INTENSET.RXC	Description
0	X	X	Start-of-frame detection disabled.
1	0	0	Reserved
1	0	1	Start-of-frame detection enabled. RXC wakes up the device from all sleep modes.
1	1	0	Start-of-frame detection enabled. RXS wakes up the device from all sleep modes.
1	1	1	Start-of-frame detection enabled. Both RXC and RXS wake up the device from all sleep modes.

Bit 6 – SBMODE Stop Bit Mode

This bit selects the number of stop bits transmitted.
This bit is not synchronized.

Value	Description
0	One stop bit.
1	Two stop bits.

Bits 2:0 – CHSIZE[2:0] Character Size

These bits select the number of bits in a character.
These bits are not synchronized.

CHSIZE[2:0]	Description
0x0	8 bits
0x1	9 bits
0x2-0x4	Reserved
0x5	5 bits
0x6	6 bits
0x7	7 bits

© 2025 Microchip Technology Inc. and its subsidiaries

23.3. Debug Control

Name: DBGCTRL
Offset: 0x08
Reset: 0x00
Property: PAC Write-Protection

Table 23-3. Register Bit Attribute Legend

Symbol	Description	Symbol	Description	Symbol	Description
R	Readable bit	**HC**	Cleared by Hardware	(Grey cell)	Unimplemented
W	Writable bit	**HS**	Set by Hardware	**X**	Bit is unknown at Reset
K	Write to clear	**S**	Software settable bit	—	—

Bit	7	6	5	4	3	2	1	0
								DBGSTOP
Access								R/W
Reset								0

Bit 0 – DBGSTOP Debug Stop Mode
This bit controls the baud-rate generator functionality when the CPU is halted by an external debugger.

Value	Description
0	The baud-rate generator continues normal operation when the CPU is halted by an external debugger.
1	The baud-rate generator is halted when the CPU is halted by an external debugger.

© 2025 Microchip Technology Inc. and its subsidiaries

23.4. Baud

Name: BAUD
Offset: 0x0A
Reset: 0x0000
Property: Enable-Protected, PAC Write-Protection

Table 23-4. Register Bit Attribute Legend

Symbol	Description	Symbol	Description	Symbol	Description
R	Readable bit	**HC**	Cleared by Hardware	(Grey cell)	Unimplemented
W	Writable bit	**HS**	Set by Hardware	**X**	Bit is unknown at Reset
K	Write to clear	**S**	Software settable bit	—	—

Bit	15	14	13	12	11	10	9	8
	BAUD[15:8]							
Access	R/W	R/W	R/W	R/W	R/W	R/W	R/W	R/W
Reset	0	0	0	0	0	0	0	0

Bit	7	6	5	4	3	2	1	0
	BAUD[7:0]							
Access	R/W	R/W	R/W	R/W	R/W	R/W	R/W	R/W
Reset	0	0	0	0	0	0	0	0

Bits 15:0 – BAUD[15:0] Baud Value

These bits control the clock generation, as described in the SERCOM Baud Rate section.

- **Bits 15:0 - BAUD[15:0]: Baud Value**

  These bits control the clock generation, as described in the *SERCOM Clock Generation – Baud-Rate Generator* section.

© 2025 Microchip Technology Inc. and its subsidiaries

23.5. Interrupt Enable Clear

Name: INTENCLR
Offset: 0x0C
Reset: 0x00
Property: PAC Write-Protection

This register allows the user to disable an interrupt without read-modify-write operation. Changes in this register will also be reflected in the Interrupt Enable Set register (INTENSET).

This register allows the user to disable an interrupt without doing a read-modify-write operation. Changes in this register will also be reflected in the Interrupt Enable Set register (INTENSET).

Table 23-5. Register Bit Attribute Legend

Symbol	Description	Symbol	Description	Symbol	Description
R	Readable bit	**HC**	Cleared by Hardware	(Grey cell)	Unimplemented
W	Writable bit	**HS**	Set by Hardware	**X**	Bit is unknown at Reset
K	Write to clear	**S**	Software settable bit	—	—

Bit	7	6	5	4	3	2	1	0
					RXS	RXC	TXC	DRE
Access					R/W	R/W	R/W	R/W
Reset					0	0	0	0

Bit 3 – RXS Receive Start Interrupt Enable
Writing '0' to this bit has no effect.
Writing '1' to this bit will clear the Receive Start Interrupt Enable bit, which disables the Receive Start interrupt.

Value	Description
0	Receive Start interrupt is disabled.
1	Receive Start interrupt is enabled.

Bit 2 – RXC Receive Complete Interrupt Enable
Writing '0' to this bit has no effect.
Writing '1' to this bit will clear the Receive Complete Interrupt Enable bit, which disables the Receive Complete interrupt.

Value	Description
0	Receive Complete interrupt is disabled.
1	Receive Complete interrupt is enabled.

Bit 1 – TXC Transmit Complete Interrupt Enable
Writing '0' to this bit has no effect.
Writing '1' to this bit will clear the Transmit Complete Interrupt Enable bit, which disables the Receive Complete interrupt.

Value	Description
0	Transmit Complete interrupt is disabled.
1	Transmit Complete interrupt is enabled.

Bit 0 – DRE Data Register Empty Interrupt Enable
Writing '0' to this bit has no effect.
Writing '1' to this bit will clear the Data Register Empty Interrupt Enable bit, which disables the Data Register Empty interrupt.

© 2025 Microchip Technology Inc. and its subsidiaries

Value	Description
0	Data Register Empty interrupt is disabled.
1	Data Register Empty interrupt is enabled.

© 2025 Microchip Technology Inc. and its subsidiaries

23.6. Interrupt Enable Set

Name: INTENSET
Offset: 0x0D
Reset: 0x00
Property: PAC Write-Protection

This register allows the user to enable an interrupt without read-modify-write operation. Changes in this register will also be reflected in the Interrupt Enable Clear register (INTENCLR) .

This register allows the user to disable an interrupt without doing a read-modify-write operation. Changes in this register will also be reflected in the Interrupt Enable Clear register (INTENCLR).

Table 23-6. Register Bit Attribute Legend

Symbol	Description	Symbol	Description	Symbol	Description
R	Readable bit	**HC**	Cleared by Hardware	(Grey cell)	Unimplemented
W	Writable bit	**HS**	Set by Hardware	**X**	Bit is unknown at Reset
K	Write to clear	**S**	Software settable bit	—	—

Bit	7	6	5	4	3	2	1	0
					RXS	RXC	TXC	DRE
Access					R/W	R/W	R/W	R/W
Reset					0	0	0	0

Bit 3 – RXS Receive Start Interrupt Enable
Writing '0' to this bit has no effect.
Writing '1' to this bit will set the Receive Start Interrupt Enable bit, which enables the Receive Start interrupt.

Value	Description
0	Receive Start interrupt is disabled.
1	Receive Start interrupt is enabled.

Bit 2 – RXC Receive Complete Interrupt Enable
Writing '0' to this bit has no effect.
Writing '1' to this bit will set the Receive Complete Interrupt Enable bit, which enables the Receive Complete interrupt.

Value	Description
0	Receive Complete interrupt is disabled.
1	Receive Complete interrupt is enabled.

Bit 1 – TXC Transmit Complete Interrupt Enable
Writing '0' to this bit has no effect.
Writing '1' to this bit will set the Transmit Complete Interrupt Enable bit, which enables the Transmit Complete interrupt.

Value	Description
0	Transmit Complete interrupt is disabled.
1	Transmit Complete interrupt is enabled.

Bit 0 – DRE Data Register Empty Interrupt Enable
Writing '0' to this bit has no effect.
Writing '1' to this bit will set the Data Register Empty Interrupt Enable bit, which enables the Data Register Empty interrupt.

© 2025 Microchip Technology Inc. and its subsidiaries

Value	Description
0	Data Register Empty interrupt is disabled.
1	Data Register Empty interrupt is enabled.

© 2025 Microchip Technology Inc. and its subsidiaries

23.7. Interrupt Flag Status and Clear

Name: INTFLAG
Offset: 0x0E
Reset: 0x00
Property: -

Table 23-7. Register Bit Attribute Legend

Symbol	Description	Symbol	Description	Symbol	Description
R	Readable bit	**HC**	Cleared by Hardware	(Grey cell)	Unimplemented
W	Writable bit	**HS**	Set by Hardware	**X**	Bit is unknown at Reset
K	Write to clear	**S**	Software settable bit	—	—

Bit	7	6	5	4	3	2	1	0
					RXS	RXC	TXC	DRE
Access					R/W	R	R/W	R
Reset					0	0	0	0

Bit 3 – RXS Receive Start
This flag is cleared by writing '1' to it.
This flag is set when a start condition is detected on the RxD line and start-of-frame detection is enabled (CTRLB.SFDE is '1').
Writing '0' to this bit has no effect.
Writing '1' to this bit will clear the Receive Start interrupt flag.

Bit 2 – RXC Receive Complete
This flag is cleared by reading the Data register (DATA) or by disabling the receiver.
This flag is set when there are unread data in DATA.
Writing '0' to this bit has no effect.
Writing '1' to this bit has no effect.

Bit 1 – TXC Transmit Complete
This flag is cleared by writing '1' to it or by writing new data to DATA.
This flag is set when the entire frame in the transmit shift register has been shifted out and there are no new data in DATA.
Writing '0' to this bit has no effect.
Writing '1' to this bit will clear the flag.

Bit 0 – DRE Data Register Empty
This flag is cleared by writing new data to DATA.
This flag is set when DATA is empty and ready to be written.
Writing '0' to this bit has no effect.
Writing '1' to this bit has no effect.

© 2025 Microchip Technology Inc. and its subsidiaries

23.8. Status

Name: STATUS
Offset: 0x10
Reset: 0x0000
Property: -

Table 23-8. Register Bit Attribute Legend

Symbol	Description	Symbol	Description	Symbol	Description
R	Readable bit	**HC**	Cleared by Hardware	(Grey cell)	Unimplemented
W	Writable bit	**HS**	Set by Hardware	**X**	Bit is unknown at Reset
K	Write to clear	**S**	Software settable bit	—	—

Bit	15	14	13	12	11	10	9	8
	SYNCBUSY							
Access	R/W							
Reset	0							

Bit	7	6	5	4	3	2	1	0
						BUFOVF	FERR	PERR
Access						R/W	R/W	R/W
Reset						0	0	0

Bit 15 – SYNCBUSY Synchronization Busy
This bit is cleared when the synchronization of registers between the clock domains is complete.
This bit is set when the synchronization of registers between clock domains is started.

Bit 2 – BUFOVF Buffer Overflow
Reading this bit before reading the Data register will indicate the error status of the next character to be read.
This bit is cleared by writing '1' to the bit or by disabling the receiver.
This bit is set when a buffer overflow condition is detected. A buffer overflow occurs when the receive buffer is full, there is a new character waiting in the receive shift register and a new start bit is detected.

Value	Description
0	Writing '0' to this bit has no effect.
1	Writing '1' to this bit will clear it.

Bit 1 – FERR Frame Error
Reading this bit before reading the Data register will indicate the error status of the next character to be read.
This bit is cleared by writing '1' to the bit or by disabling the receiver.
This bit is set if the received character had a frame error, i.e., when the first stop bit is zero.

Value	Description
0	Writing '0' to this bit has no effect.
1	Writing '1' to this bit will clear it.

Bit 0 – PERR Parity Error
Reading this bit before reading the Data register will indicate the error status of the next character to be read.
This bit is cleared by writing '1' to the bit or by disabling the receiver.
This bit is set if parity checking is enabled (CTRLA.FORM is 0x1) and a parity error is detected.

© 2025 Microchip Technology Inc. and its subsidiaries

Value	Description
0	Writing '0' to this bit has no effect.
1	Writing '1' to this bit will clear it.

© 2025 Microchip Technology Inc. and its subsidiaries

23.9. Data

Name: DATA
Offset: 0x18
Reset: 0x0000
Property: -

Table 23-9. Register Bit Attribute Legend

Symbol	Description	Symbol	Description	Symbol	Description
R	Readable bit	**HC**	Cleared by Hardware	(Grey cell)	Unimplemented
W	Writable bit	**HS**	Set by Hardware	**X**	Bit is unknown at Reset
K	Write to clear	**S**	Software settable bit	—	—

Bit	15	14	13	12	11	10	9	8
								DATA[8]
Access								R/W
Reset								0

Bit	7	6	5	4	3	2	1	0
	DATA[7:0]							
Access	R/W	R/W	R/W	R/W	R/W	R/W	R/W	R/W
Reset	0	0	0	0	0	0	0	0

Bits 8:0 – DATA[8:0] Data

Reading these bits will return the contents of the Receive Data register. The register should be read only when the Receive Complete Interrupt Flag bit in the Interrupt Flag Status and Clear register (INTFLAG.RXC) is set. The status bits in STATUS should be read before reading the DATA value in order to get any corresponding error.

Writing these bits will write the Transmit Data register. This register should be written only when the Data Register Empty Interrupt Flag bit in the Interrupt Flag Status and Clear register (INTFLAG.DRE) is set.

© 2025 Microchip Technology Inc. and its subsidiaries

24. SERCOM SPI – SERCOM Serial Peripheral Interface

24.1. Overview

The Serial Peripheral Interface (SPI) is one of the available modes in the Serial Communication Interface (SERCOM).

The SPI uses the SERCOM transmitter and receiver configured as shown in Block Diagram. Each side, host and client, depicts a separate SPI containing a Shift register, a transmit buffer and a two-level receive buffer. In addition, the SPI host uses the SERCOM baud-rate generator, while the SPI client can use the SERCOM address match logic. Labels in capital letters are synchronous to CLK_SERCOMx_APB and accessible by the CPU, while labels in lowercase letters are synchronous to the SCK clock.

24.2. Features

SERCOM SPI includes the following features:

- Full-duplex, four-wire interface (MISO, MOSI, SCK, $\overline{SS}$)
- Single-buffered transmitter, double-buffered receiver
- Supports all four SPI modes of operation
- Single data direction operation allows alternate function on MISO or MOSI pin
- Selectable LSB- or MSB-first data transfer
- Host operation:
  - Serial clock speed, $f_{SCK}=1/t_{SCK}$(1)
  - 8-bit clock generator
- Client operation:
  - Serial clock speed, $f_{SCK}=1/t_{SSCK}$(1)
  - Optional 8-bit address match operation
  - Operation in all sleep modes

Note:

1. For t_{SCK} and t_{SSCK} values, refer to SPI Timing Characteristics.

24.3. Block Diagram

Figure 24-1. Full-Duplex SPI Host Client Interconnection

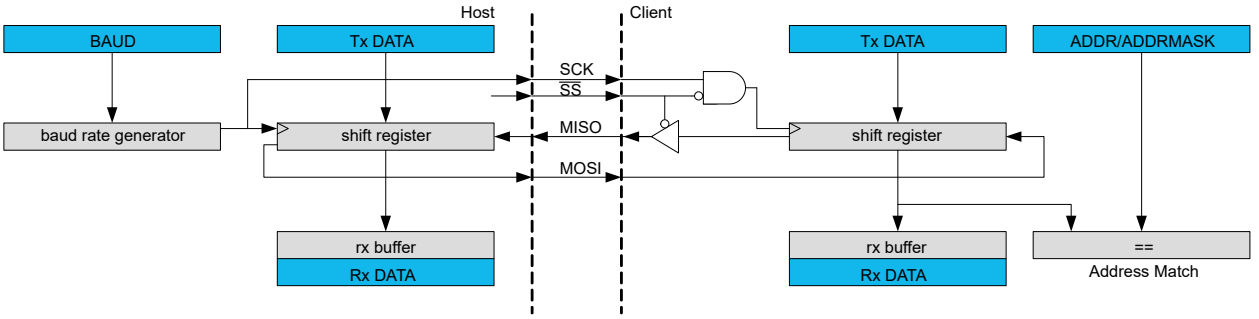

© 2025 Microchip Technology Inc. and its subsidiaries

24.4. Signal Description

Table 24-1. SERCOM SPI Signals

Signal Name	Type	Description
PAD[3:0]	Digital I/O	General SERCOM pins

One signal can be mapped to one of several pins.

24.5. Product Dependencies

In order to use this peripheral, other parts of the system must be configured correctly, as described below.

24.5.1. I/O Lines

In order to use the SERCOM's I/O lines, the I/O pins must be configured using the IO Pin Controller (PORT).

When the SERCOM is configured for SPI operation, the SERCOM controls the direction and value of the I/O pins according to the table below. Both PORT control bits PINCFGn.PULLEN and PINCFGn.DRVSTR are still effective. If the receiver is disabled, the data input pin can be used for other purposes. In Host mode, the Client select line ($\overline{SS}$) is controlled by software.

Table 24-2. SPI Pin Configuration

Pin	Host SPI	Client SPI
MOSI	Output	Input
MISO	Input	Output
SCK	Output	Input
$\overline{SS}$	User defined output enable	Input

The combined configuration of PORT, the Data In Pinout and the Data Out Pinout bit groups in the Control A register (CTRLA.DIPO and CTRLA.DOPO) define the physical position of the SPI signals in the table above.

24.5.2. Power Management

This peripheral can continue to operate in any Sleep mode where its source clock is running. The interrupts can wake-up the device from Sleep modes.

24.5.3. Clocks

The SERCOM bus clock (CLK_SERCOMx_APB) can be enabled and disabled in the Power Manager. Refer to *Peripheral Clock Masking* for details and default status of this clock.

A generic clock (GCLK_SERCOMx_CORE) is required to clock the SPI. This clock must be configured and enabled in the Generic Clock Controller before using the SPI.

This generic clock is asynchronous to the bus clock (CLK_SERCOMx_APB). Therefore, writes to certain registers will require synchronization to the clock domains.

24.5.4. Interrupts

The interrupt request line is connected to the Interrupt Controller. In order to use interrupt requests of this peripheral, the Interrupt Controller (NVIC) must be configured first. Refer to *Nested Vector Interrupt Controller* for details.

24.5.5. Events

Not applicable.

© 2025 Microchip Technology Inc. and its subsidiaries

24.5.6. Debug Operation

When the CPU is halted in Debug mode, this peripheral will continue normal operation. If the peripheral is configured to require periodical service by the CPU through interrupts or similar, improper operation or data loss may result during debugging. This peripheral can be forced to halt operation during debugging - refer to the Debug Control (DBGCTRL) register for details.

24.5.7. Register Access Protection

Registers with write access can be write-protected optionally by the Peripheral Access Controller (PAC).

PAC write protection is not available for the following registers:

- Interrupt Flag Clear and Status register (INTFLAG)
- Status register (STATUS)
- Data register (DATA)

Optional PAC write protection is denoted by the "PAC Write-Protection" property in each individual register description.

Write-protection does not apply to accesses through an external debugger.

24.5.8. Analog Connections

Not applicable.

24.6. Functional Description

24.6.1. Principle of Operation

The SPI is a high-speed synchronous data transfer interface. It allows high-speed communication between the device and peripheral devices.

The SPI can operate as Host or Client. As Host, the SPI initiates and controls all data transactions. The SPI is single buffered for transmitting and double buffered for receiving.

When transmitting data, the Data register can be loaded with the next character to be transmitted during the current transmission.

When receiving, the data is transferred to the two-level receive buffer, and the receiver is ready for a new character.

The SPI transaction format is shown in SPI Transaction Format. Each transaction can contain one or more characters. The character size is configurable, and can be either 8 or 9 bits.

Figure 24-2. SPI Transaction Format

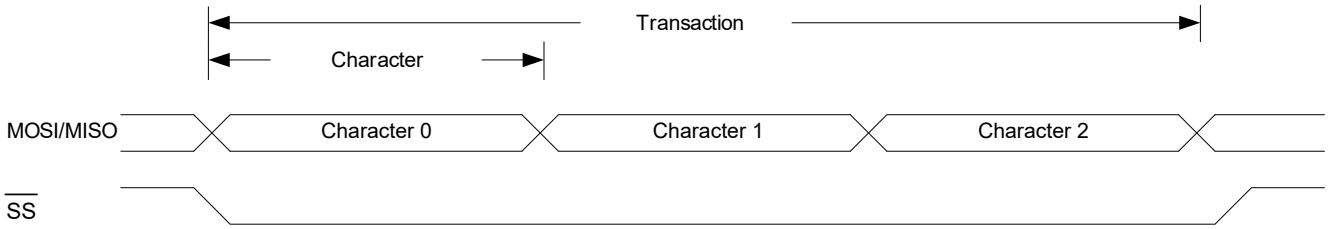

The SPI Host must pull the SPI select line ($\overline{SS}$) of the desired Client low to initiate a transaction. The Host and Client prepare data to send via their respective Shift registers, and the Host generates the serial clock on the SCK line.

Data are always shifted from Host to Client on the Host Output Client Input line (MOSI); data is shifted from Client to Host on the Host Input Client Output line (MISO).

© 2025 Microchip Technology Inc. and its subsidiaries

Each time character is shifted out from the Host, a character will be shifted out from the Client simultaneously. To signal the end of a transaction, the Host will pull the $\overline{SS}$ line high

24.6.2. Basic Operation

24.6.2.1. Initialization

The following registers are enable-protected, meaning that they can only be written when the SPI is disabled (CTRL.ENABLE=0):

- Control A register (CTRLA), except Enable (CTRLA.ENABLE) and Software Reset (CTRLA.SWRST)
- Control B register (CTRLB), except Receiver Enable (CTRLB.RXEN)
- Baud register (BAUD)
- Address register (ADDR)

When the SPI is enabled or is being enabled (CTRLA.ENABLE=1), any writing to these registers will be discarded.

when the SPI is being disabled, writing to these registers will be completed after the disabling.

Enable-protection is denoted by the Enable-Protection property in the register description.

Initialize the SPI by following these steps:

1. Select SPI mode in Host / Client operation in the Operating Mode bit group in the CTRLA register (CTRLA.MODE= 0x2 or 0x3).
2. Select transfer mode for the Clock Polarity bit and the Clock Phase bit in the CTRLA register (CTRLA.CPOL and CTRLA.CPHA) if desired.
3. Select the Frame Format value in the CTRLA register (CTRLA.FORM).
4. Configure the Data In Pinout field in the Control A register (CTRLA.DIPO) for SERCOM pads of the receiver.
5. Configure the Data Out Pinout bit group in the Control A register (CTRLA.DOPO) for SERCOM pads of the transmitter.
6. Select the Character Size value in the CTRLB register (CTRLB.CHSIZE).
7. Write the Data Order bit in the CTRLA register (CTRLA.DORD) for data direction.
8. If the SPI is used in Host mode:
   a. Select the desired baud rate by writing to the Baud register (BAUD).
9. Enable the receiver by writing the Receiver Enable bit in the CTRLB register (CTRLB.RXEN=1).

24.6.2.2. Enabling, Disabling, and Resetting

This peripheral is enabled by writing '1' to the Enable bit in the Control A register (CTRLA.ENABLE), and disabled by writing '0' to it.

Writing ‘1’ to the Software Reset bit in the Control A register (CTRLA.SWRST) will reset all registers of this peripheral to their initial states, except the DBGCTRL register, and the peripheral is disabled.

Refer to the CTRLA register description for details.

24.6.2.3. Clock Generation

In SPI Host operation (CTRLA.MODE=0x3), the serial clock (SCK) is generated internally by the SERCOM baud-rate generator.

In SPI mode, the baud-rate generator is set to synchronous mode. The 8-bit Baud register (BAUD) value is used for generating SCK and clocking the shift register. Refer to *Clock Generation – Baud-Rate Generator* for more details.

In SPI Client operation (CTRLA.MODE is 0x2), the clock is provided by an external Host on the SCK pin. This clock is used to directly clock the SPI shift register.

© 2025 Microchip Technology Inc. and its subsidiaries

24.6.2.4. Data Register

The SPI Transmit Data register (TxDATA) and SPI Receive Data register (RxDATA) share the same I/O address, referred to as the SPI Data register (DATA). Writing DATA register will update the Transmit Data register. Reading the DATA register will return the contents of the Receive Data register.

24.6.2.5. SPI Transfer Modes

There are four combinations of SCK phase and polarity to transfer serial data. The SPI Data Transfer modes are shown in SPI Transfer Modes (Table) and SPI Transfer Modes (Figure).

SCK phase is configured by the Clock Phase bit in the CTRLA register (CTRLA.CPHA). SCK polarity is programmed by the Clock Polarity bit in the CTRLA register (CTRLA.CPOL). Data bits are shifted out and latched in on opposite edges of the SCK signal. This ensures sufficient time for the data signals to stabilize.

Table 24-3. SPI Transfer Modes

Mode	CPOL	CPHA	Leading Edge	Trailing Edge
0	0	0	Rising, sample	Falling, setup
1	0	1	Rising, setup	Falling, sample
2	1	0	Falling, sample	Rising, setup
3	1	1	Falling, setup	Rising, sample

Note:
Leading edge is the first clock edge in a clock cycle.

Trailing edge is the second clock edge in a clock cycle.

© 2025 Microchip Technology Inc. and its subsidiaries

Figure 24-3. SPI Transfer Modes

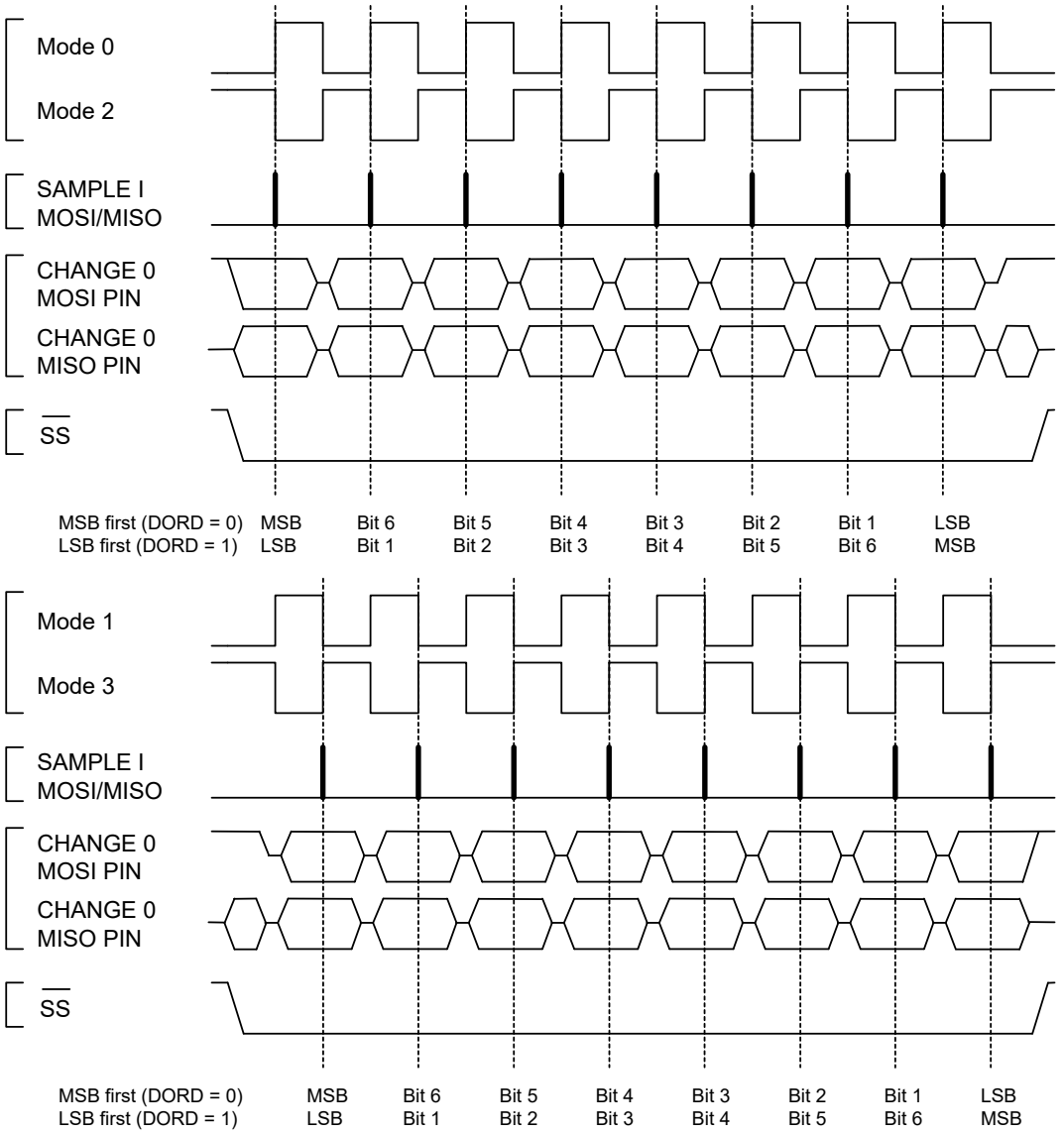

24.6.2.6. Transferring Data

Host

In Host mode (CTRLA.MODE=0x3), the $\overline{SS}$ line must be configured as an output. $\overline{SS}$ can be assigned to any general purpose I/O pin. When the SPI is ready for a data transaction, software must pull the $\overline{SS}$ line low.

When writing a character to the Data register (DATA), the character will be transferred to the shift register. Once the content of TxDATA has been transferred to the shift register, the Data Register Empty flag in the Interrupt Flag Status and Clear register (INTFLAG.DRE) will be set. And a new character can be written to DATA.

Each time one character is shifted out from the Host, another character will be shifted in from the Client simultaneously. If the receiver is enabled (CTRLA.RXEN=1), the contents of the shift register will be transferred to the two-level receive buffer. The transfer takes place in the same clock cycle as the last data bit is shifted in. And the Receive Complete Interrupt flag in the Interrupt Flag Status and Clear register (INTFLAG.RXC) will be set. The received data can be retrieved by reading DATA.

© 2025 Microchip Technology Inc. and its subsidiaries

When the last character has been transmitted and there is no valid data in DATA, the Transmit Complete Interrupt flag in the Interrupt Flag Status and Clear register (INTFLAG.TXC) will be set. When the transaction is finished, the Host must pull the $\overline{SS}$ line high to notify the Client.

Client

In Client mode (CTRLA.MODE=0x2), the SPI interface will remain inactive with the MISO line tri-stated as long as the $\overline{SS}$ pin is pulled high. Software may update the contents of DATA at any time as long as the Data Register Empty flag in the Interrupt Status and Clear register (INTFLAG.DRE) is set.

When $\overline{SS}$ is pulled low and SCK is running, the Client will sample and shift out data according to the transaction mode set. When the content of TxDATA has been loaded into the shift register, INTFLAG.DRE will be set, and new data can be written to DATA.

Similar to the Host, the Client will receive one character for each character transmitted. A character will be transferred into the two-level receive buffer within the same clock cycle its last data bit is received. The received character can be retrieved from DATA when the Receive Complete interrupt flag (INTFLAG.RXC) is set.

When the Host pulls the $\overline{SS}$ line high, the transaction is done and the Transmit Complete Interrupt flag in the Interrupt Flag Status and Clear register (INTFLAG.TXC) will be set.

After DATA is written it takes up to three SCK clock cycles until the content of DATA is ready to be loaded into the shift register on the next character boundary. As a consequence, the first character transferred in a SPI transaction will not be the content of DATA. This can be avoided by using the preloading feature. Refer to Preloading of the Client Shift Register.

When transmitting several characters in one SPI transaction, the data has to be written into DATA register with at least three SCK clock cycles left in the current character transmission. If this criteria is not met, the previously received character will be transmitted.

Once the DATA register is empty, it takes three CLK_SERCOM_APB cycles for INTFLAG.DRE to be set.

24.6.2.7. Receiver Error Bit

The SPI receiver has one error bit: the Buffer Overflow bit (BUFOVF), which can be read from the Status register (STATUS). Once an error happens, the bit will stay set until it is cleared by writing '1' to it. The bit is also automatically cleared when the receiver is disabled.

There are two methods for buffer overflow notification, selected by the immediate buffer overflow notification bit in the Control A register (CTRLA.IBON):

If CTRLA.IBON=1, STATUS.BUFOVF is raised immediately upon buffer overflow. Software can then empty the receive FIFO by reading RxDATA until the receiver complete interrupt flag in the Interrupt Flag Status and Clear register (INTFLAG.RXC) goes low.

If CTRLA.IBON=0, the buffer overflow condition travels with data through the receive FIFO. After the received data is read, STATUS.BUFOVF will be set along with INTFLAG.RXC, and RxDATA will be zero.

24.6.3. Additional Features

24.6.3.1. Address Recognition

When the SPI is configured for client operation (CTRLA.MODE=0x2) with address recognition (CTRLA.FORM is 0x2), the SERCOM address recognition logic is enabled: the first character in a transaction is checked for an address match.

If there is a match, the Receive Complete Interrupt flag in the Interrupt Flag Status and Clear register (INTFLAG.RXC) is set, the MISO output is enabled, and the transaction is processed. If the device is in Sleep mode, an address match can wake-up the device in order to process the transaction.

If there is no match, the complete transaction is ignored.

If a 9-bit frame format is selected, only the lower 8 bits of the Shift register are checked against the Address register (ADDR).

© 2025 Microchip Technology Inc. and its subsidiaries

Preload must be disabled (CTRLB.PLOADEN=0) in order to use this mode.

24.6.3.2. Preloading of the Client Shift Register

When starting a transaction, the client will first transmit the contents of the shift register before loading new data from DATA. The first character sent can be either the reset value of the shift register (if this is the first transmission since the last reset) or the last character in the previous transmission.

Preloading can be used to preload data into the shift register while $\overline{SS}$ is high: this eliminates sending a dummy character when starting a transaction. If the shift register is not preloaded, the current contents of the shift register will be shifted out.

Only one data character will be preloaded into the shift register while the synchronized $\overline{SS}$ signal is high. If the next character is written to DATA before $\overline{SS}$ is pulled low, the second character will be stored in DATA until transfer begins.

For proper preloading, sufficient time must elapse between $\overline{SS}$ going low and the first SCK sampling edge, as in Timing Using Preloading. See also the *Electrical Characteristics* chapters for timing details.

Preloading is enabled by writing '1' to the Client Data Preload Enable bit in the CTRLB register (CTRLB.PLOADEN).

Figure 24-4. Timing Using Preloading

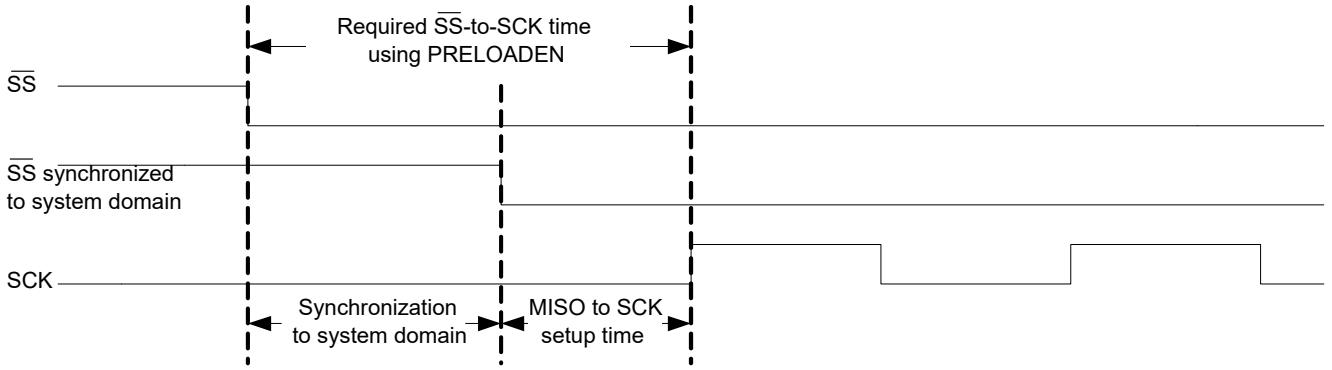

24.6.3.3. Host with Several Clients

If the bus consists of several SPI clients, a SPI host can use general purpose I/O pins to control the $\overline{SS}$ line to each of the clients on the bus, as shown in the following figure. In this configuration, the single selected SPI client will drive the tri-state MISO line.

Figure 24-5. Multiple Clients in Parallel

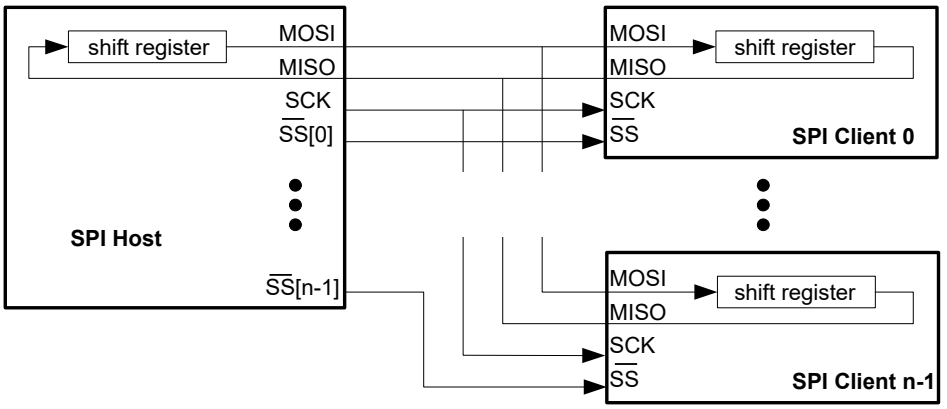

© 2025 Microchip Technology Inc. and its subsidiaries

Another configuration is multiple clients in series, as shown in the following figure. In this configuration, all n attached clients are connected in series. A common $\overline{SS}$ line is provided to all clients, enabling them simultaneously. The host must shift n characters for a complete transaction. The $\overline{SS}$ line is controlled by a normal GPIO.

Figure 24-6. Multiple Clients in Series

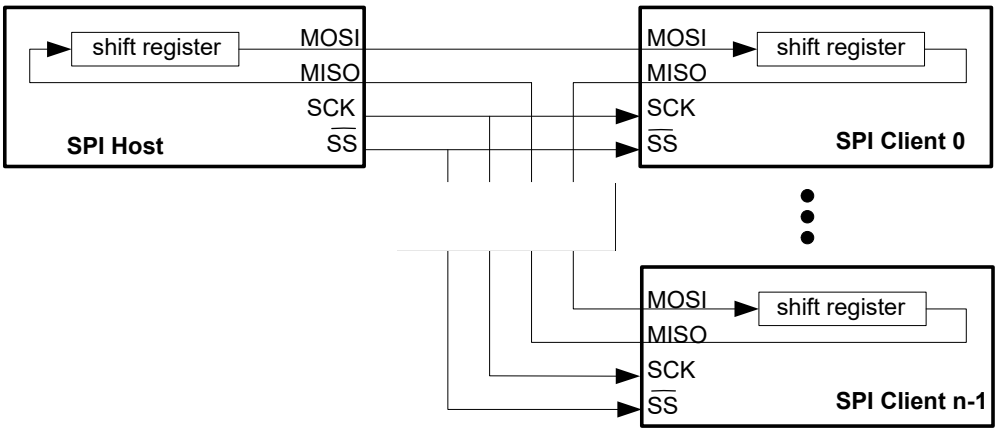

24.6.3.4. Loop-Back Mode

For Loop-back mode, configure the Data In Pinout (CTRLA.DIPO) and Data Out Pinout (CTRLA.DOPO) to use the same data pins for transmit and receive. The loop-back is through the pad, so the signal is also available externally.

24.6.4. Interrupts

The SPI has the following interrupt sources. These are asynchronous interrupts, and can wake up the device from any sleep mode:

- Data Register Empty (DRE)
- Receive Complete (RXC)
- Transmit Complete (TXC)

Each interrupt source has its own interrupt flag. The interrupt flag in the Interrupt Flag Status and Clear register (INTFLAG) will be set when the interrupt condition is met. Each interrupt can be individually enabled by writing '1' to the corresponding bit in the Interrupt Enable Set register (INTENSET), and disabled by writing '1' to the corresponding bit in the Interrupt Enable Clear register (INTENCLR).

An interrupt request is generated when the interrupt flag is set and if the corresponding interrupt is enabled. The interrupt request remains active until either the interrupt flag is cleared, the interrupt is disabled, or the SPI is reset. For details on clearing interrupt flags, refer to the INTFLAG register description.

The SPI has one common interrupt request line for all the interrupt sources. The value of INTFLAG indicates which interrupt is executed. Note that interrupts must be globally enabled for interrupt requests. Refer to *Nested Vector Interrupt Controller* for details.

24.6.5. Sleep Mode Operation

The behavior in sleep mode is depending on the Host/Client configuration and the Run In Standby bit in the Control A register (CTRLA.RUNSTDBY):

- **Host operation, CTRLA.RUNSTDBY=1:** The peripheral clock GCLK_SERCOM_CORE will continue to run in idle sleep mode and in standby sleep mode. Any interrupt can wake up the device.

© 2025 Microchip Technology Inc. and its subsidiaries

- **Host operation, CTRLA.RUNSTDBY=0:** GLK_SERCOMx_CORE will be disabled after the ongoing transaction is finished. Any interrupt can wake up the device.
- **Client operation, CTRLA.RUNSTDBY=1:** The Receive Complete interrupt can wake up the device
- **Client operation, CTRLA.RUNSTDBY=0:** All reception will be dropped, including the ongoing transaction

24.6.6. Synchronization

Due to asynchronicity between the main clock domain and the peripheral clock domains, some registers need to be synchronized when written or read.

The following bits are synchronized when written:

- Software Reset bit in the CTRLA register (CTRLA.SWRST)
- Enable bit in the CTRLA register (CTRLA.ENABLE)
- Receiver Enable bit in the CTRLB register (CTRLB.RXEN)

Note: CTRLB.RXEN is write-synchronized somewhat differently. See also *CTRLB* register for details.

Required write synchronization is denoted by the "Write-Synchronized" property in the register description.

© 2025 Microchip Technology Inc. and its subsidiaries

24.7. Register Summary

Offset	Name	Bit Pos.	7	6	5	4	3	2	1	0
0x00	CTRLA	7:0	RUNSTDBY			MODE[2:0]			ENABLE	SWRST
		15:8								IBON
		23:16			DIPO[1:0]				DOPO[1:0]	
		31:24		DORD	CPOL	CPHA	FORM[3:0]			
0x04	CTRLB	7:0		PLOADEN				CHSIZE[2:0]		
		15:8	AMODE[1:0]							
		23:16							RXEN	
		31:24								
0x08	DBGCTRL	7:0								DBGSTOP
0x09	Reserved									
0x0A	BAUD	7:0	BAUD[7:0]							
0x0B	Reserved									
0x0C	INTENCLR	7:0						RXC	TXC	DRE
0x0D	INTENSET	7:0						RXC	TXC	DRE
0x0E	INTFLAG	7:0						RXC	TXC	DRE
0x0F	Reserved									
0x10	STATUS	7:0						BUFOVF		
		15:8	SYNCBUSY							
0x12 … 0x13	Reserved									
0x14	ADDR	7:0	ADDR[7:0]							
		15:8								
		23:16	ADDRMASK[7:0]							
		31:24								
0x18	DATA	7:0	DATA[7:0]							
		15:8								DATA[8]

© 2025 Microchip Technology Inc. and its subsidiaries

24.7.1. Control A

Name: CTRLA
Offset: 0x00
Reset: 0x00000000
Property: PAC Write-Protection, Enable-Protected, Write-Synchronized

Table 24-4. Register Bit Attribute Legend

Symbol	Description	Symbol	Description	Symbol	Description
R	Readable bit	**HC**	Cleared by Hardware	(Grey cell)	Unimplemented
W	Writable bit	**HS**	Set by Hardware	**X**	Bit is unknown at Reset
K	Write to clear	**S**	Software settable bit	—	—

Bit	31	30	29	28	27	26	25	24
		DORD	CPOL	CPHA	FORM[3:0]			
Access		R/W	R/W	R/W	R/W	R/W	R/W	R/W
Reset		0	0	0	0	0	0	0

Bit	23	22	21	20	19	18	17	16
			DIPO[1:0]				DOPO[1:0]	
Access			R/W	R/W			R/W	R/W
Reset			0	0			0	0

Bit	15	14	13	12	11	10	9	8
								IBON
Access								R/W
Reset								0

Bit	7	6	5	4	3	2	1	0
	RUNSTDBY			MODE[2:0]			ENABLE	SWRST
Access	R/W			R/W	R/W	R/W	R/W	R/W
Reset	0			0	0	0	0	0

Bit 30 – DORD Data Order

This bit selects the data order when a character is shifted out from the Shift register.
This bit is not synchronized.

Value	Description
0	MSB is transferred first.
1	LSB is transferred first.

Bit 29 – CPOL Clock Polarity

In combination with the Clock Phase bit (CPHA), this bit determines the SPI Transfer mode.
This bit is not synchronized.

Value	Description
0	SCK is low when idle. The leading edge of a clock cycle is a rising edge, while the trailing edge is a falling edge.
1	SCK is high when idle. The leading edge of a clock cycle is a falling edge, while the trailing edge is a rising edge.

Bit 28 – CPHA Clock Phase

In combination with the Clock Polarity bit (CPOL), this bit determines the SPI Transfer mode.
This bit is not synchronized.

Mode	CPOL	CPHA	Leading Edge	Trailing Edge
0x0	0	0	Rising, sample	Falling, change

© 2025 Microchip Technology Inc. and its subsidiaries

CPHA (continued)

Mode	CPOL	CPHA	Leading Edge	Trailing Edge
0x1	0	1	Rising, change	Falling, sample
0x2	1	0	Falling, sample	Rising, change
0x3	1	1	Falling, change	Rising, sample

Value	Description
0	The data is sampled on a leading SCK edge and changed on a trailing SCK edge.
1	The data is sampled on a trailing SCK edge and changed on a leading SCK edge.

Bits 27:24 – FORM[3:0] Frame Format

This bit field selects the various frame formats supported by the SPI in Client mode. When the 'SPI frame with address' format is selected, the first byte received is checked against the ADDR register.

FORM[3:0]	Name	Description
0x0	SPI	SPI frame
0x1	-	Reserved
0x2	SPI_ADDR	SPI frame with address
0x3-0xF	-	Reserved

Bits 21:20 – DIPO[1:0] Data In Pinout

These bits define the Data In (DI) pad configurations.
In Host operation, DI is MISO.
In Client operation, DI is MOSI.
These bits are not synchronized.

DIPO[1:0]	Name	Description
0x0	PAD[0]	SERCOM PAD[0] is used as data input
0x1	PAD[1]	SERCOM PAD[1] is used as data input
0x2	PAD[2]	SERCOM PAD[2] is used as data input
0x3	PAD[3]	SERCOM PAD[3] is used as data input

Bits 17:16 – DOPO[1:0] Data Out Pinout

This bit defines the available pad configurations for Data Out (DO) and the Serial Clock (SCK). In Client operation, the SPI Select ($\overline{SS}$) line is controlled by DOPO, while in Host operation the $\overline{SS}$ line is controlled by the port configuration.
In Host operation, DO is MOSI.
In Client operation, DO is MISO.
These bits are not synchronized.

DOPO	DO	SCK	Client $\overline{SS}$	Host $\overline{SS}$
0x0	PAD[0]	PAD[1]	PAD[2]	PAD[2] Host $\overline{SS}$ pin when MSSEN = 1 otherwise System configuration
0x1	Reserved			
0x2	PAD[3]	PAD[1]	PAD[2]	PAD[2] Host $\overline{SS}$ pin when MSSEN = 1 otherwise System configuration
0x3	Reserved			

Bit 8 – IBON Immediate Buffer Overflow Notification

This bit controls when the Buffer Overflow Status bit (STATUS.BUFOVF) is set when a buffer overflow occurs.
This bit is not synchronized.

Value	Description
0	STATUS.BUFOVF is set when it occurs in the data stream.
1	STATUS.BUFOVF is set immediately upon buffer overflow.

Bit 7 – RUNSTDBY Run In Standby

This bit defines the functionality in Standby Sleep mode.

© 2025 Microchip Technology Inc. and its subsidiaries

These bits are not synchronized.

RUNSTDBY	Client	Host
0x0	Disabled. All reception is dropped, including the ongoing transaction.	Generic clock is disabled when ongoing transaction is finished. All interrupts can wake-up the device.
0x1	Ongoing transaction continues, wake on Receive Complete interrupt.	Generic clock is enabled while in sleep modes. All interrupts can wake-up the device.

Bits 4:2 – MODE[2:0] Operating Mode

These bits must be written to 0x2 or 0x3 to select the SPI of the SERCOM.
0x2: SPI Client operation
0x3: SPI Host operation
These bits are not synchronized.

Bit 1 – ENABLE Enable

Due to synchronization, there is delay from writing CTRLA.ENABLE until the peripheral is enabled/disabled. The value written to CTRL.ENABLE will read back immediately and the Synchronization Enable Busy bit in the Synchronization Busy register (SYNCBUSY.ENABLE) will be set. SYNCBUSY.ENABLE is cleared when the operation is complete.
This bit is not enable-protected.

Value	Description
0	The peripheral is disabled or being disabled.
1	The peripheral is enabled or being enabled.

Bit 0 – SWRST Software Reset

Writing '0' to this bit has no effect.
Writing '1' to this bit resets all registers in the SERCOM, except DBGCTRL, to their initial state, and the SERCOM will be disabled.
Writing ''1' to CTRL.SWRST will always take precedence, meaning that all other writes in the same write-operation will be discarded. Any register write access during the ongoing Reset will result in an APB error. Reading any register will return the Reset value of the register.
Due to synchronization, there is a delay from writing CTRLA.SWRST until the Reset is complete. CTRLA.SWRST and SYNCBUSY. SWRST will both be cleared when the Reset is complete.
This bit is not enable-protected.

Value	Description
0	There is no Reset operation ongoing.
1	The Reset operation is ongoing.

© 2025 Microchip Technology Inc. and its subsidiaries

24.7.2. Control B

Name: CTRLB
Offset: 0x04
Reset: 0x00000000
Property: PAC Write-Protection, Enable-Protected

Table 24-5. Register Bit Attribute Legend

Symbol	Description	Symbol	Description	Symbol	Description
R	Readable bit	**HC**	Cleared by Hardware	(Grey cell)	Unimplemented
W	Writable bit	**HS**	Set by Hardware	**X**	Bit is unknown at Reset
K	Write to clear	**S**	Software settable bit	—	—

Bit	31	30	29	28	27	26	25	24
Access								
Reset								

Bit	23	22	21	20	19	18	17	16
							RXEN	
Access							R/W	
Reset							0	

Bit	15	14	13	12	11	10	9	8
	AMODE[1:0]							
Access	R/W	R/W						
Reset	0	0						

Bit	7	6	5	4	3	2	1	0
		PLOADEN				CHSIZE[2:0]		
Access		R/W				R/W	R/W	R/W
Reset		0				0	0	0

Bit 17 – RXEN Receiver Enable

Writing '0' to this bit will disable the SPI receiver immediately. The receive buffer will be flushed, data from ongoing receptions will be lost and STATUS.BUFOVF will be cleared.
Writing '1' to CTRLB.RXEN when the SPI is disabled will set CTRLB.RXEN immediately. When the SPI is enabled, CTRLB.RXEN will be cleared, SYNCBUSY.CTRLB will be set and remain set until the receiver is enabled. When the receiver is enabled CTRLB.RXEN will read back as '1'.
Writing '1' to CTRLB.RXEN when the SPI is enabled will set SYNCBUSY.CTRLB, which will remain set until the receiver is enabled, and CTRLB.RXEN will read back as '1'.
This bit is not enable-protected.

Value	Description
0	The receiver is disabled or being enabled.
1	The receiver is enabled or it will be enabled when SPI is enabled.

Bits 15:14 – AMODE[1:0] Address Mode

These bits set the Client addressing mode when the frame format (CTRLA.FORM) with address is used. They are unused in Host mode.

AMODE[1:0]	Name	Description
0x0	MASK	ADDRMASK is used as a mask to the ADDR register
0x1	2_ADDRS	The Client responds to the two unique addresses in ADDR and ADDRMASK

© 2025 Microchip Technology Inc. and its subsidiaries

AMODE (continued)		
AMODE[1:0]	Name	Description
0x2	RANGE	The Client responds to the range of addresses between and including ADDR and ADDRMASK. ADDR is the upper limit
0x3	-	Reserved

Bit 6 – PLOADEN Client Data Preload Enable

Setting this bit will enable preloading of the Client shift register when there is no transfer in progress. If the $\overline{SS}$ line is high when DATA is written, it will be transferred immediately to the shift register.

Bits 2:0 – CHSIZE[2:0] Character Size

CHSIZE[2:0]	Name	Description
0x0	8BIT	8 bits
0x1	9BIT	9 bits
0x2-0x7	-	Reserved

© 2025 Microchip Technology Inc. and its subsidiaries

24.7.3. Debug Control

Name: DBGCTRL
Offset: 0x08
Reset: 0x00
Property: PAC Write-Protection

Table 24-6. Register Bit Attribute Legend

Symbol	Description	Symbol	Description	Symbol	Description
R	Readable bit	**HC**	Cleared by Hardware	(Grey cell)	Unimplemented
W	Writable bit	**HS**	Set by Hardware	**X**	Bit is unknown at Reset
K	Write to clear	**S**	Software settable bit	—	—

Bit	7	6	5	4	3	2	1	0
								DBGSTOP
Access								R/W
Reset								0

Bit 0 – DBGSTOP Debug Stop Mode
This bit controls the functionality when the CPU is halted by an external debugger.

Value	Description
0	The baud-rate generator continues normal operation when the CPU is halted by an external debugger.
1	The baud-rate generator is halted when the CPU is halted by an external debugger.

© 2025 Microchip Technology Inc. and its subsidiaries

24.7.4. Baud Rate

Name: BAUD
Offset: 0x0A
Reset: 0x00
Property: PAC Write-Protection, Enable-Protected

Table 24-7. Register Bit Attribute Legend

Symbol	Description	Symbol	Description	Symbol	Description
R	Readable bit	**HC**	Cleared by Hardware	(Grey cell)	Unimplemented
W	Writable bit	**HS**	Set by Hardware	**X**	Bit is unknown at Reset
K	Write to clear	**S**	Software settable bit	—	—

Bit	7	6	5	4	3	2	1	0
	BAUD[7:0]							
Access	R/W	R/W	R/W	R/W	R/W	R/W	R/W	R/W
Reset	0	0	0	0	0	0	0	0

Bits 7:0 – BAUD[7:0] Baud Register
These bits control the clock generation, as described in the *SERCOM Clock Generation – Baud-Rate Generator*.

© 2025 Microchip Technology Inc. and its subsidiaries

24.7.5. Interrupt Enable Clear

Name: INTENCLR
Offset: 0x0C
Reset: 0x00
Property: PAC Write-Protection

This register allows the user to disable an interrupt without read-modify-write operation. Changes in this register will also be reflected in the Interrupt Enable Set register (INTENSET).

Table 24-8. Register Bit Attribute Legend

Symbol	Description	Symbol	Description	Symbol	Description
R	Readable bit	**HC**	Cleared by Hardware	(Grey cell)	Unimplemented
W	Writable bit	**HS**	Set by Hardware	**X**	Bit is unknown at Reset
K	Write to clear	**S**	Software settable bit	—	—

Bit	7	6	5	4	3	2	1	0
						RXC	TXC	DRE
Access						R/W	R/W	R/W
Reset						0	0	0

Bit 2 – RXC Receive Complete Interrupt Enable
Writing '0' to this bit has no effect.
Writing '1' to this bit will clear the Receive Complete Interrupt Enable bit, which disables the Receive Complete interrupt.

Value	Description
0	Receive Complete interrupt is disabled.
1	Receive Complete interrupt is enabled.

Bit 1 – TXC Transmit Complete Interrupt Enable
Writing '0' to this bit has no effect.
Writing '1' to this bit will clear the Transmit Complete Interrupt Enable bit, which disable the Transmit Complete interrupt.

Value	Description
0	Transmit Complete interrupt is disabled.
1	Transmit Complete interrupt is enabled.

Bit 0 – DRE Data Register Empty Interrupt Enable
Writing '0' to this bit has no effect.
Writing '1' to this bit will clear the Data Register Empty Interrupt Enable bit, which disables the Data Register Empty interrupt.

Value	Description
0	Data Register Empty interrupt is disabled.
1	Data Register Empty interrupt is enabled.

© 2025 Microchip Technology Inc. and its subsidiaries

24.7.6. Interrupt Enable Set

Name: INTENSET
Offset: 0x0D
Reset: 0x00
Property: PAC Write-Protection

This register allows the user to disable an interrupt without read-modify-write operation. Changes in this register will also be reflected in the Interrupt Enable Clear register (INTENCLR).

Table 24-9. Register Bit Attribute Legend

Symbol	Description	Symbol	Description	Symbol	Description
R	Readable bit	**HC**	Cleared by Hardware	(Grey cell)	Unimplemented
W	Writable bit	**HS**	Set by Hardware	**X**	Bit is unknown at Reset
K	Write to clear	**S**	Software settable bit	—	—

Bit	7	6	5	4	3	2	1	0
						RXC	TXC	DRE
Access						R/W	R/W	R/W
Reset						0	0	0

Bit 2 – RXC Receive Complete Interrupt Enable
Writing '0' to this bit has no effect.
Writing '1' to this bit will set the Receive Complete Interrupt Enable bit, which enables the Receive Complete interrupt.

Value	Description
0	Receive Complete interrupt is disabled.
1	Receive Complete interrupt is enabled.

Bit 1 – TXC Transmit Complete Interrupt Enable
Writing '0' to this bit has no effect.
Writing '1' to this bit will set the Transmit Complete Interrupt Enable bit, which enables the Transmit Complete interrupt.

Value	Description
0	Transmit Complete interrupt is disabled.
1	Transmit Complete interrupt is enabled.

Bit 0 – DRE Data Register Empty Interrupt Enable
Writing '0' to this bit has no effect.
Writing '1' to this bit will set the Data Register Empty Interrupt Enable bit, which enables the Data Register Empty interrupt.

Value	Description
0	Data Register Empty interrupt is disabled.
1	Data Register Empty interrupt is enabled.

© 2025 Microchip Technology Inc. and its subsidiaries

24.7.7. Interrupt Flag Status and Clear

Name: INTFLAG
Offset: 0x0E
Reset: 0x00
Property: -

Table 24-10. Register Bit Attribute Legend

Symbol	Description	Symbol	Description	Symbol	Description
R	Readable bit	**HC**	Cleared by Hardware	(Grey cell)	Unimplemented
W	Writable bit	**HS**	Set by Hardware	**X**	Bit is unknown at Reset
K	Write to clear	**S**	Software settable bit	—	—

Bit	7	6	5	4	3	2	1	0
						RXC	TXC	DRE
Access						R	R/W	R
Reset						0	0	0

Bit 2 – RXC Receive Complete
This flag is cleared by reading the Data (DATA) register or by disabling the receiver.
This flag is set when there are unread data in the receive buffer. If address matching is enabled, the first data received in a transaction will be an address.
Writing '0' to this bit has no effect.
Writing '1' to this bit has no effect.

Bit 1 – TXC Transmit Complete
This flag is cleared by writing '1' to it or by writing new data to DATA.
In Host mode, this flag is set when the data have been shifted out and there are no new data in DATA.
In Client mode, this flag is set when the $\overline{SS}$ pin is pulled high. If address matching is enabled, this flag is only set if the transaction was initiated with an address match.
Writing '0' to this bit has no effect.
Writing '1' to this bit will clear the flag.

Bit 0 – DRE Data Register Empty
This flag is cleared by writing new data to DATA.
This flag is set when DATA is empty and ready for new data to transmit.
Writing '0' to this bit has no effect.
Writing '1' to this bit has no effect.

© 2025 Microchip Technology Inc. and its subsidiaries

24.7.8. Status

Name: STATUS
Offset: 0x10
Reset: 0x0000
Property: –

Table 24-11. Register Bit Attribute Legend

Symbol	Description	Symbol	Description	Symbol	Description
R	Readable bit	**HC**	Cleared by Hardware	(Grey cell)	Unimplemented
W	Writable bit	**HS**	Set by Hardware	**X**	Bit is unknown at Reset
K	Write to clear	**S**	Software settable bit	—	—

Bit	15	14	13	12	11	10	9	8
	SYNCBUSY							
Access	R/W							
Reset	0							

Bit	7	6	5	4	3	2	1	0
						BUFOVF		
Access						R/W		
Reset						0		

Bit 15 – SYNCBUSY Synchronization Busy
This bit is cleared when the synchronization of registers between the clock domains is complete.
This bit is set when the synchronization of registers between clock domains is in progress.

Bit 2 – BUFOVF Buffer Overflow
Reading this bit before reading DATA will indicate the error status of the next character to be read.
This bit is cleared by writing '1' to the bit or by disabling the receiver.
This bit is set when a buffer overflow condition is detected. See also CTRLA.IBON for overflow handling.
When set, the corresponding RxDATA will be zero.
Writing '0' to this bit has no effect.
Writing '1' to this bit will clear it.

Value	Description
0	No Buffer Overflow has occurred.
1	A Buffer Overflow has occurred.

© 2025 Microchip Technology Inc. and its subsidiaries

24.7.9. Address

Name: ADDR
Offset: 0x14
Reset: 0x00000000
Property: PAC Write-Protection, Enable-Protected

Table 24-12. Register Bit Attribute Legend

Symbol	Description	Symbol	Description	Symbol	Description
R	Readable bit	**HC**	Cleared by Hardware	(Grey cell)	Unimplemented
W	Writable bit	**HS**	Set by Hardware	**X**	Bit is unknown at Reset
K	Write to clear	**S**	Software settable bit	—	—

Bit	31	30	29	28	27	26	25	24
Access								
Reset								

Bit	23	22	21	20	19	18	17	16
	ADDRMASK[7:0]							
Access	R/W	R/W	R/W	R/W	R/W	R/W	R/W	R/W
Reset	0	0	0	0	0	0	0	0

Bit	15	14	13	12	11	10	9	8
Access								
Reset								

Bit	7	6	5	4	3	2	1	0
	ADDR[7:0]							
Access	R/W	R/W	R/W	R/W	R/W	R/W	R/W	R/W
Reset	0	0	0	0	0	0	0	0

Bits 23:16 – ADDRMASK[7:0] Address Mask
These bits hold the address mask when the transaction format with address is used (CTRLA.FORM, CTRLB.AMODE).

Bits 7:0 – ADDR[7:0] Address
These bits hold the address when the transaction format with address is used (CTRLA.FORM, CTRLB.AMODE).

© 2025 Microchip Technology Inc. and its subsidiaries

24.7.10. Data

Name: DATA
Offset: 0x18
Reset: 0x0000
Property: –

Table 24-13. Register Bit Attribute Legend

Symbol	Description	Symbol	Description	Symbol	Description
R	Readable bit	**HC**	Cleared by Hardware	(Grey cell)	Unimplemented
W	Writable bit	**HS**	Set by Hardware	**X**	Bit is unknown at Reset
K	Write to clear	**S**	Software settable bit	—	—

Bit	15	14	13	12	11	10	9	8
								DATA[8]
Access								R/W
Reset								0

Bit	7	6	5	4	3	2	1	0
	DATA[7:0]							
Access	R/W	R/W	R/W	R/W	R/W	R/W	R/W	R/W
Reset	0	0	0	0	0	0	0	0

Bits 8:0 – DATA[8:0] Data

Reading these bits will return the contents of the receive data buffer. The register should be read only when the Receive Complete Interrupt Flag bit in the Interrupt Flag Status and Clear register (INTFLAG.RXC) is set.

Writing these bits will write the transmit data buffer. This register should be written only when the Data Register Empty Interrupt Flag bit in the Interrupt Flag Status and Clear register (INTFLAG.DRE) is set.

© 2025 Microchip Technology Inc. and its subsidiaries

25. SERCOM I²C – Inter-Integrated Circuit

25.1. Overview

The Inter-Integrated Circuit (I²C) interface is one of the available modes in the Serial Communication Interface (SERCOM).

The I²C interface uses the SERCOM transmitter and receiver configured as shown in Figure 25-1. Labels in capital letters are registers accessible by the CPU, while lowercase labels are internal to the SERCOM.

A SERCOM instance can be configured to be either an I²C Host or an I²C Client. Both Host and Client have an interface containing a Shift register, a transmit buffer and a receive buffer. In addition, the I²C Host uses the SERCOM baud-rate generator, while the I²C Client uses the SERCOM address match logic.

25.2. Features

SERCOM I²C includes the following features:

- Host or Client operation
- Philips I²C compatible
- SMBus™ compatible
- Support of 100 kHz and 400 kHz I²C mode low system clock frequencies
- Physical interface includes:
  - Slew-rate limited outputs
  - Filtered inputs
- Client operation:
  - Operation in all sleep modes
  - Wake-up on address match
  - 7-bit Address match in hardware for:
  -
    - Unique address and/or 7-bit general call address
    - Address range
    - Two unique addresses

25.3. Block Diagram

Figure 25-1. I²C Single-Host Single-Client Interconnection

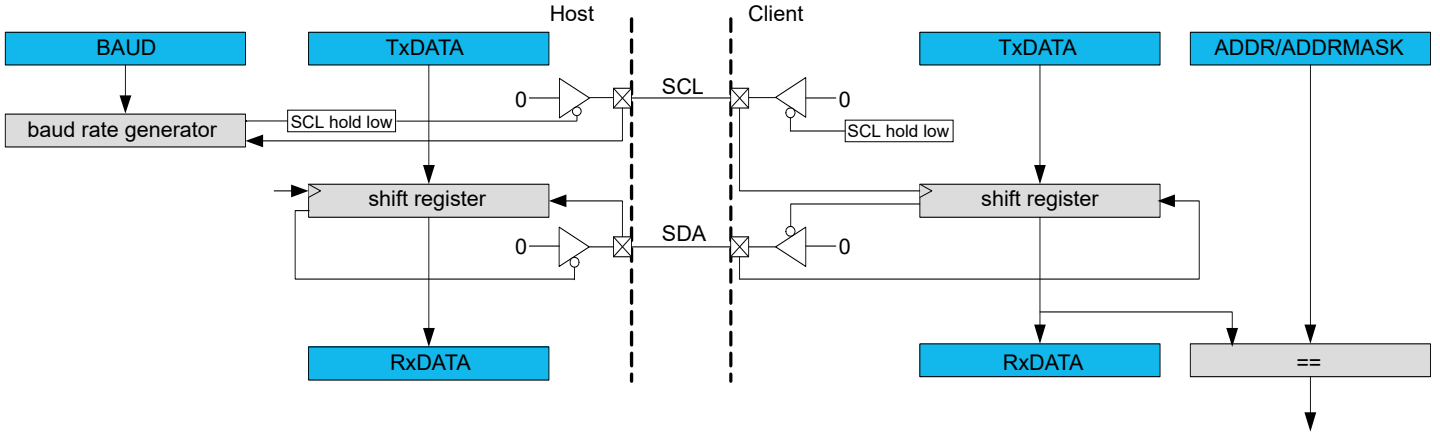

© 2025 Microchip Technology Inc. and its subsidiaries

25.4. Signal Description

Signal Name	Type	Description
PAD[0]	Digital I/O	SDA
PAD[1]	Digital I/O	SCL
PAD[2]	Digital I/O	SDA_OUT (4-wire operation)
PAD[3]	Digital I/O	SCL_OUT (4-wire operation)

One signal can be mapped on several pins.

Not all the pins are I^2C pins. The pins supporting the 400 kHz I^2C mode are detailed in Table 6-1. PORT Function Multiplexing (see column "type").

25.5. Product Dependencies

In order to use this peripheral, other parts of the system must be configured correctly, as described below.

25.5.1. I/O Lines

In order to use the I/O lines of this peripheral, the I/O pins must be configured using the I/O Pin Controller (PORT).

When the SERCOM is used in I^2C mode, the SERCOM controls the direction and value of the I/O pins. The PORT Control bit (PINCFGn.DRVSTR) is still effective for the SERCOM output pins. The PORT Control bit (PINCFGn.PULLEN) is still effective on the SERCOM input pins, but is limited to the enabling/disabling of a pull down only (it is not possible to enable/disable a pull up). If the receiver or transmitter is disabled, these pins can be used for other purposes.

25.5.2. Power Management

This peripheral can continue to operate in any Sleep mode where its source clock is running. The interrupts can wake-up the device from Sleep modes.

25.5.3. Clocks

The SERCOM bus clock (CLK_SERCOMx_APB) can be enabled and disabled in the Power Manager. Refer to *Peripheral Clock Masking* for details and default status of this clock.

Two generic clocks are used by SERCOM: GCLK_SERCOMx_CORE and GCLK_SERCOM_SLOW. The core clock (GCLK_SERCOMx_CORE) can clock the I^2C when working as a host. The slow clock (GCLK_SERCOM_SLOW) is required only for certain functions, e.g. SMBus timing. These two clocks must be configured and enabled in the Generic Clock Controller (GCLK) before using the I^2C.

These generic clocks are asynchronous to the bus clock (CLK_SERCOMx_APB). Due to this asynchronicity, writes to certain registers will require synchronization between the clock domains. Refer to Synchronization for further details.

25.5.4. Interrupts

The interrupt request line is connected to the Interrupt Controller. In order to use interrupt requests of this peripheral, the Interrupt Controller (NVIC) must be configured first. Refer to *Nested Vector Interrupt Controller* for details.

25.5.5. Events

Not applicable.

25.5.6. Debug Operation

When the CPU is halted in Debug mode, this peripheral will continue normal operation. If the peripheral is configured to require periodical service by the CPU through interrupts or similar,

© 2025 Microchip Technology Inc. and its subsidiaries

improper operation or data loss may result during debugging. This peripheral can be forced to halt operation during debugging - refer to the Debug Control (DBGCTRL) register for details.

25.5.7. Register Access Protection

Registers with write access can be write-protected optionally by the Peripheral Access Controller (PAC).

PAC write protection is not available for the following registers:

- Interrupt Flag Clear and Status register (INTFLAG)
- Status register (STATUS)
- Data register (DATA)
- Address register (ADDR) in Host mode

Optional PAC write protection is denoted by the "PAC Write-Protection" property in each individual register description.

Write-protection does not apply to accesses through an external debugger.

25.5.8. Analog Connections

Not applicable.

25.6. Functional Description

25.6.1. Principle of Operation

The I^2C interface uses two physical lines for communication:

- Serial Data Line (SDA) for data transfer
- Serial Clock Line (SCL) for the bus clock

A transaction starts with the I^2C host sending the Start condition, followed by a 7-bit address and a direction bit (read or write to/from the client).

The addressed I^2C client will then Acknowledge (ACK) the address, and data packet transactions can begin. Every 9-bit data packet consists of 8 data bits followed by a one-bit reply indicating whether the data was acknowledged or not.

If a data packet is Not Acknowledged (NACK), whether by the I^2C client or host, the I^2C host takes action by either terminating the transaction by sending the Stop condition, or by sending a repeated start to transfer more data.

The figure below illustrates the possible transaction formats and Transaction Diagram Symbols explains the transaction symbols. These symbols will be used in the following descriptions.

© 2025 Microchip Technology Inc. and its subsidiaries

Figure 25-2. Transaction Diagram Symbols

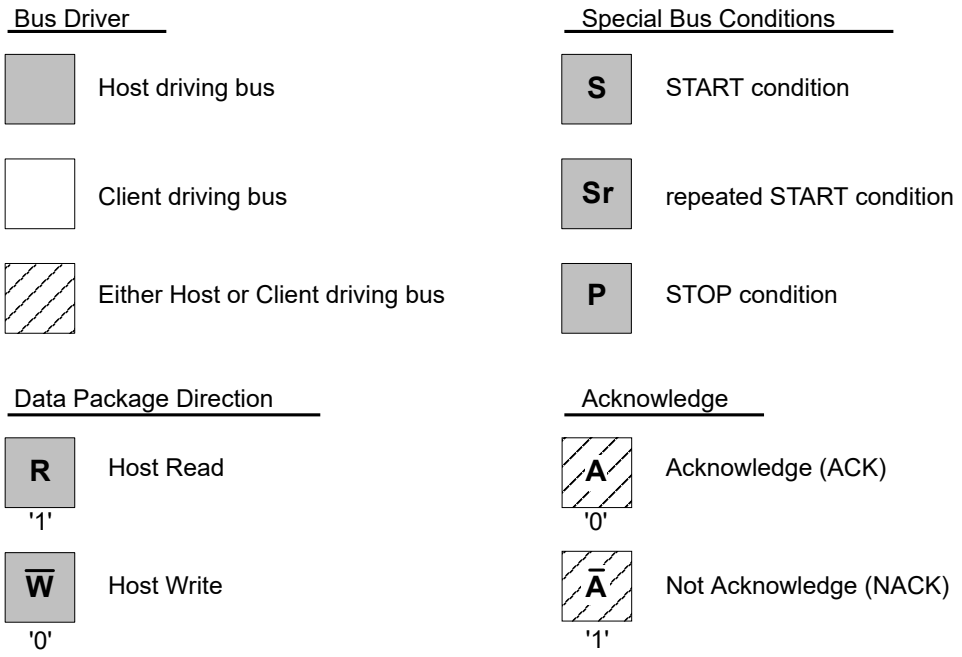

Figure 25-3. Basic I^{2}C Transaction Diagram

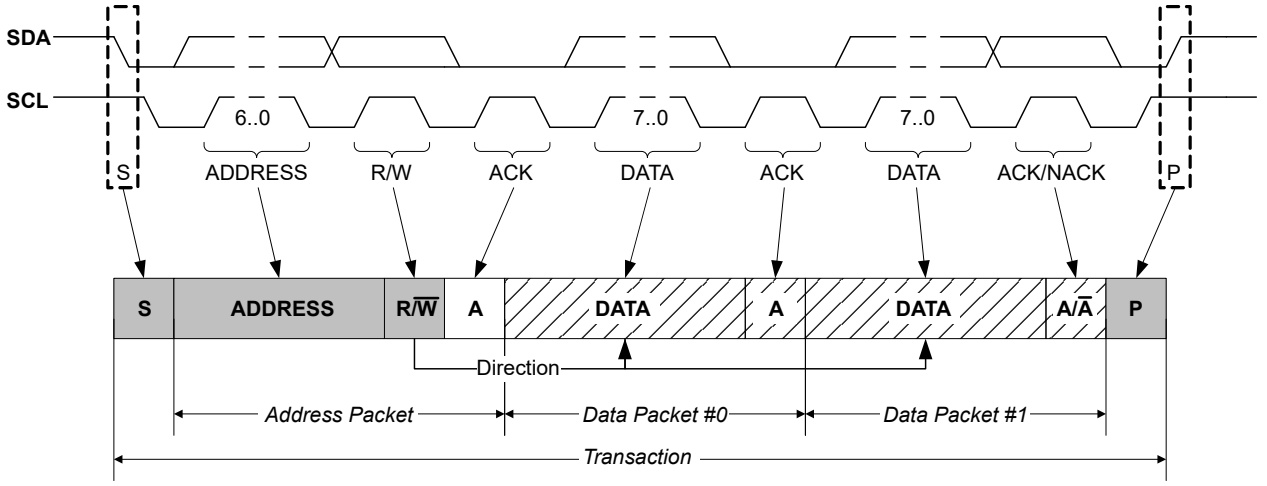

25.6.2. Basic Operation

25.6.2.1. Initialization

The following registers are enable-protected, meaning they can be written only when the I^{2}C interface is disabled (CTRLA.ENABLE is '0'):

- Control A register (CTRLA), except Enable (CTRLA.ENABLE) and Software Reset (CTRLA.SWRST) bits
- Control B register (CTRLB), except Acknowledge Action (CTRLB.ACKACT) and Command (CTRLB.CMD) bits
- Baud register (BAUD)
- Address register (ADDR) in client operation.

When the I^{2}C is enabled or is being enabled (CTRLA.ENABLE=1), writing to these registers will be discarded. If the I^{2}C is being disabled, writing to these registers will be completed after the disabling.

© 2025 Microchip Technology Inc. and its subsidiaries

Enable-protection is denoted by the "Enable-Protection" property in the register description.

Before the I^2C is enabled it must be configured as outlined by the following steps:

1. Select I^2C Host or Client mode by writing 0x4 (Client mode) or 0x5 (Host mode) to the Operating Mode bits in the CTRLA register (CTRLA.MODE).
2. If desired, select the SDA Hold Time value in the CTRLA register (CTRLA.SDAHOLD).
3. If desired, enable smart operation by setting the Smart Mode Enable bit in the CTRLB register (CTRLB.SMEN).
4. If desired, enable SCL low time-out by setting the SCL Low Time-Out bit in the Control A register (CTRLA.LOWTOUT).
5. In Host mode:
   a. Select the inactive bus time-out in the Inactive Time-Out bit group in the CTRLA register (CTRLA.INACTOUT).
   b. Write the Baud Rate register (BAUD) to generate the desired baud rate.

   In Client mode:
   a. Configure the address match configuration by writing the Address Mode value in the CTRLB register (CTRLB.AMODE).
   b. Set the Address and Address Mask value in the Address register (ADDR.ADDR and ADDR.ADDRMASK) according to the address configuration.

25.6.2.2. Enabling, Disabling, and Resetting

This peripheral is enabled by writing '1' to the Enable bit in the Control A register (CTRLA.ENABLE), and disabled by writing '0' to it.

Refer to CTRLA regsiter for details.

25.6.2.3. I^2C Bus State Logic

The Bus state logic includes several logic blocks that continuously monitor the activity on the I^2C bus lines in all Sleep modes with running GCLK_SERCOM_x clocks. The start and stop detectors and the bit counter are all essential in the process of determining the current Bus state. The Bus state is determined according to Bus State Diagram. Software can get the current Bus state by reading the Host Bus State bits in the Status register (STATUS.BUSSTATE). The value of STATUS.BUSSTATE in the figure is shown in binary.

© 2025 Microchip Technology Inc. and its subsidiaries

Figure 25-4. Bus State Diagram

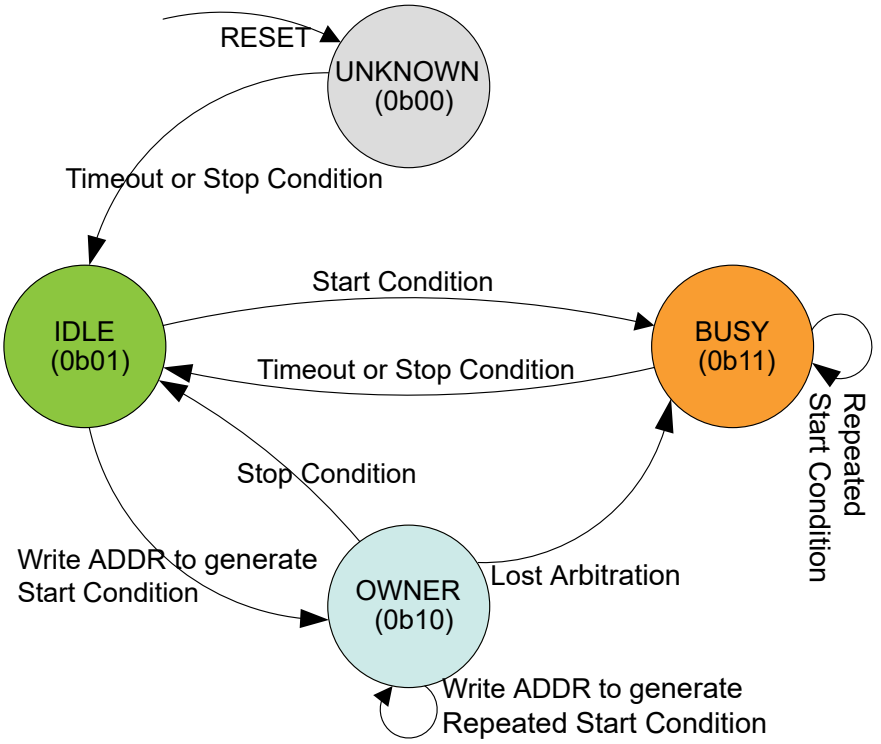

The Bus state machine is active when the I²C host is enabled.

After the I²C host has been enabled, the Bus state is UNKNOWN (0b00). From the UNKNOWN state, the bus will transition to IDLE (0b01) by either:

- Forcing by writing 0b01 to STATUS.BUSSTATE
- A Stop condition is detected on the bus
- If the inactive bus time-out is configured for SMBus compatibility (CTRLA.INACTOUT) and a time-out occurs.

Note: Once a known Bus state is established, the Bus state logic will not re-enter the UNKNOWN state.

When the bus is IDLE it is ready for a new transaction. If a Start condition is issued on the bus by another I²C host in a multi-host setup, the bus becomes BUSY (0b11). The bus will re-enter IDLE either when a Stop condition is detected, or when a time-out occurs (inactive bus time-out needs to be configured).

If a Start condition is generated internally by writing the Address bit group in the Address register (ADDR.ADDR) while IDLE, the OWNER state (0b10) is entered. If the complete transaction was performed without interference, i.e., arbitration was not lost, the I²C host can issue a Stop condition, which will change the Bus state back to IDLE.

However, if a packet collision is detected while in OWNER state, the arbitration is assumed lost and the Bus state becomes BUSY until a Stop condition is detected. A repeated Start condition will change the Bus state only if arbitration is lost while issuing a repeated start.

Note: Violating the protocol may cause the I²C to hang. If this happens it is possible to recover from this state by a software Reset (CTRLA.SWRST='1').

25.6.2.4. I²C Host Operation

The I²C Host is byte-oriented and interrupt based. The number of interrupts generated is kept at a minimum by automatic handling of most incidents. The software driver complexity and code size

© 2025 Microchip Technology Inc. and its subsidiaries

are reduced by auto-triggering of operations, and a Special Smart mode, which can be enabled by the Smart Mode Enable bit in the Control B register (CTRLB.SMEN).

Host Clock Generation

The SERCOM peripheral supports several I^{2}C bidirectional modes:

- Standard mode (*Sm*) up to 100 kHz
- Fast mode (*Fm*) up to 400 kHz

The Host clock configuration for *Sm* and *Fm* are described as follows:

Clock Generation (Standard-Mode, Fast-Mode, and Fast-Mode Plus)

In I^{2}C *Sm* and *Fm* mode, the Host clock (SCL) frequency is determined as described in this section:

The low (T_{LOW}) and high (T_{HIGH}) times are determined by the Baud Rate register (BAUD), while the rise (T_{RISE}) and fall (T_{FALL}) times are determined by the bus topology. Because of the wired-AND logic of the bus, T_{FALL} will be considered as part of T_{LOW}. Similarly, T_{RISE} will be in a state between T_{LOW} and T_{HIGH} until a high state has been detected.

Figure 25-5. SCL Timing

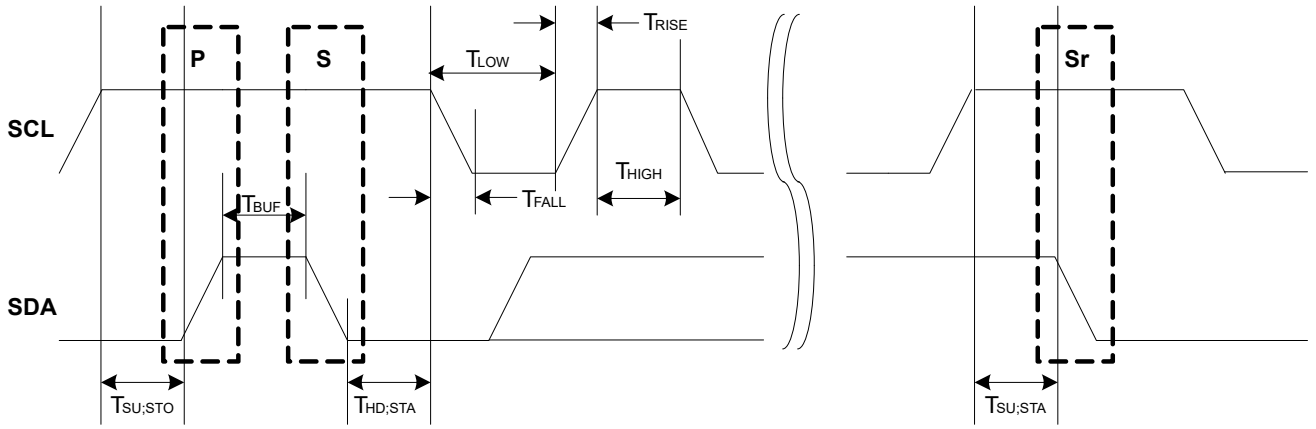

The following parameters are timed using the SCL low time period T_{LOW}. This comes from the Host Baud Rate Low bit group in the Baud Rate register (BAUD.BAUDLOW). When BAUD.BAUDLOW=0, or the Host Baud Rate bit group in the Baud Rate register (BAUD.BAUD) determines it.

- T_{LOW} – Low period of SCL clock
- $T_{SU;STO}$ – Set-up time for stop condition
- T_{BUF} – Bus free time between stop and start conditions
- $T_{HD;STA}$ – Hold time (repeated) start condition
- $T_{SU;STA}$ – Set-up time for repeated start condition
- T_{HIGH} is timed using the SCL high time count from BAUD.BAUD
- T_{RISE} is determined by the bus impedance; for internal pull-ups. Refer to *Electrical Characteristics*.
- T_{FALL} is determined by the open-drain current limit and bus impedance; can typically be regarded as zero. Refer to *Electrical Characteristics* for details.

The SCL frequency is given by:

$$f_{SCL} = \frac{1}{T_{LOW} + T_{HIGH} + T_{RISE}}$$

When BAUD.BAUDLOW is zero, the BAUD.BAUD value is used to time both SCL high and SCL low. In this case the following formula will give the SCL frequency:

© 2025 Microchip Technology Inc. and its subsidiaries

$$f_{\mathrm{SCL}} = \frac{f_{\mathrm{GCLK}}}{10 + 2BAUD + f_{\mathrm{GCLK}} \cdot T_{\mathrm{RISE}}}$$

When BAUD.BAUDLOW is non-zero, the following formula determines the SCL frequency:

$$f_{\mathrm{SCL}} = \frac{f_{\mathrm{GCLK}}}{10 + BAUD + BAUDLOW + f_{\mathrm{GCLK}} \cdot T_{\mathrm{RISE}}}$$

The following formulas can determine the SCL T_{LOW} and T_{HIGH} times:

$$T_{\mathrm{LOW}} = \frac{BAUDLOW + 5}{f_{\mathrm{GCLK}}}$$

$$T_{\mathrm{HIGH}} = \frac{BAUD + 5}{f_{\mathrm{GCLK}}}$$

Startup Timing The minimum time between SDA transition and SCL rising edge is 6 APB cycles when the DATA register is written in smart mode. If a greater startup time is required due to long rise times, the time between DATA write and IF clear must be controlled by software.
Note: When timing is controlled by user, the Smart Mode cannot be enabled.

Transmitting Address Packets

The I²C Host starts a bus transaction by writing the I²C Client address to ADDR.ADDR and the direction bit, as described in Principle of Operation. If the bus is busy, the I²C Host will wait until the bus becomes idle before continuing the operation. When the bus is idle, the I²C Host will issue a start condition on the bus. The I²C Host will then transmit an address packet using the address written to ADDR.ADDR. After the address packet has been transmitted by the I²C Host, one of four cases will arise according to arbitration and transfer direction.

Case 1: Arbitration lost or bus error during address packet transmission

If arbitration was lost during transmission of the address packet, the Host on Bus bit in the Interrupt Flag Status and Clear register (INTFLAG.MB) and the Arbitration Lost bit in the Status register (STATUS.ARBLOST) are both set. Serial data output to SDA is disabled, and the SCL is released, which disables clock stretching. In effect the I²C Host is no longer allowed to execute any operation on the bus until the bus is idle again. A bus error will behave similarly to the arbitration lost condition. In this case, the MB interrupt flag and Host Bus Error bit in the Status register (STATUS.BUSERR) are both set in addition to STATUS.ARBLOST.

The Host Received Not Acknowledge bit in the Status register (STATUS.RXNACK) will always contain the last successfully received acknowledge or not acknowledge indication.

In this case, software will typically inform the application code of the condition and then clear the interrupt flag before exiting the interrupt routine. No other flags have to be cleared at this moment, because all flags will be cleared automatically the next time the ADDR.ADDR register is written.

Case 2: Address packet transmit complete – No ACK received

If there is no I²C Client device responding to the address packet, then the INTFLAG.MB interrupt flag and STATUS.RXNACK will be set. The clock hold is active at this point, preventing further activity on the bus.

The missing ACK response can indicate that the I²C Client is busy with other tasks or sleeping. Therefore, it is not able to respond. In this event, the next step can be either issuing a stop condition (recommended) or resending the address packet by a repeated start condition. When using SMBus logic, the Client must ACK the address. If there is no response, it means that the Client is not available on the bus.

Case 3: Address packet transmit complete – Write packet, Host on Bus set

© 2025 Microchip Technology Inc. and its subsidiaries

If the I²C Host receives an acknowledge response from the I²C Client, INTFLAG.MB will be set and STATUS.RXNACK will be cleared. The clock hold is active at this point, preventing further activity on the bus.

In this case, the software implementation becomes highly protocol dependent. Three possible actions can enable the I²C operation to continue:

- Initiate a data transmit operation by writing the data byte to be transmitted into DATA.DATA.
- Transmit a new address packet by writing ADDR.ADDR. A repeated start condition will automatically be inserted before the address packet.
- Issue a stop condition, consequently terminating the transaction.

Case 4: Address packet transmit complete – Read packet, Client on Bus set

If the I²C Host receives an ACK from the I²C Client, the I²C Host proceeds to receive the next byte of data from the I²C Client. When the first data byte is received, the Client on Bus bit in the Interrupt Flag register (INTFLAG.SB) will be set and STATUS.RXNACK will be cleared. The clock hold is active at this point, preventing further activity on the bus.

In this case, the software implementation becomes highly protocol dependent. Three possible actions can enable the I²C operation to continue:

- Let the I²C Host continue to read data by acknowledging the data received. ACK can be sent by software, or automatically in smart mode.
- Transmit a new address packet.
- Terminate the transaction by issuing a stop condition.

Note: An ACK or NACK will be automatically transmitted if smart mode is enabled. The Acknowledge Action bit in the Control B register (CTRLB.ACKACT) determines whether ACK or NACK should be sent.

Transmitting Data Packets

When an address packet with direction Host Write (see Figure 25-3) was transmitted successfully , INTFLAG.MB will be set. The I²C Host will start transmitting data via the I²C bus by writing to DATA.DATA, and monitor continuously for packet collisions.

If a collision is detected, the I²C Host will lose arbitration and STATUS.ARBLOST will be set. If the transmit was successful, the I²C Host will receive an ACK bit from the I²C Client, and STATUS.RXNACK will be cleared. INTFLAG.MB will be set in both cases, regardless of arbitration outcome.

It is recommended to read STATUS.ARBLOST and handle the arbitration lost condition in the beginning of the I²C Host on Bus interrupt. This can be done as there is no difference between handling address and data packet arbitration.

STATUS.RXNACK must be checked for each data packet transmitted before the next data packet transmission can commence. The I²C Host is not allowed to continue transmitting data packets if a NACK is received from the I²C Client.

Receiving Data Packets

When INTFLAG.SB is set, the I²C Host will already have received one data packet. The I²C Host must respond by sending either an ACK or NACK. Sending a NACK may be unsuccessful when arbitration is lost during the transmission. In this case, a lost arbitration will prevent setting INTFLAG.SB. Instead, INTFLAG.MB will indicate a change in arbitration. Handling of lost arbitration is the same as for data bit transmission.

25.6.2.5. I²C Client Operation

The I²C Client is byte-oriented and interrupt-based. The number of interrupts generated is kept at a minimum by automatic handling of most events. The software driver complexity and code size are reduced by auto-triggering of operations, and a special smart mode, which can be enabled by the Smart Mode Enable bit in the Control B register (CTRLB.SMEN).

© 2025 Microchip Technology Inc. and its subsidiaries

This diagram is used as reference for the description of the I²C Client operation throughout the document.

Figure 25-6. I²C Client Behavioral Diagram

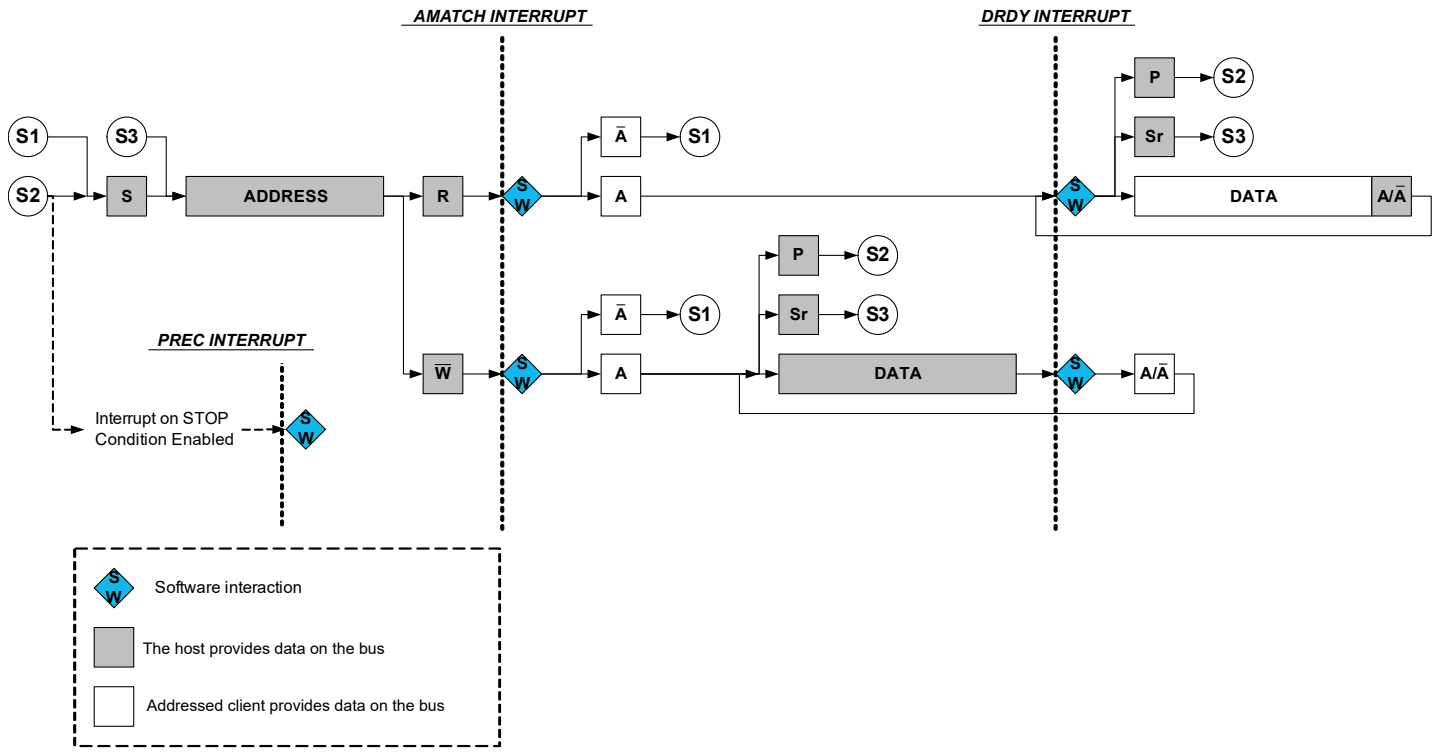

Receiving Address Packets

When a start condition is detected, the successive address packet will be received and checked by the address match logic. If the received address is not a match, the packet will be rejected, and the I²C Client will wait for a new start condition. If the received address is a match, the Address Match bit in the Interrupt Flag register (INTFLAG.AMATCH) will be set.

SCL will be stretched until the I²C Client clears INTFLAG.AMATCH. As the I²C Client holds the clock by forcing SCL low, the software has unlimited time to respond.

The direction of a transaction is determined by reading the Read / Write Direction bit in the Status register (STATUS.DIR). This bit will be updated only when a valid address packet is received.

If the Transmit Collision bit in the Status register (STATUS.COLL) is set, this indicates that the last packet addressed to the I²C Client had a packet collision. A collision causes the SDA and SCL lines to be released without any notification to software. Therefore, the next AMATCH interrupt is the first indication of the previous packet's collision. Collisions are intended to follow the SMBus Address Resolution Protocol (ARP).

After the address packet has been received from the I²C Host, one of two cases will arise based on transfer direction.

Case 1: Address packet accepted – Read flag set

The STATUS.DIR bit is '1', indicating an I²C Host read operation. The SCL line is forced low, stretching the bus clock. If an ACK is sent, I²C Client hardware will set the Data Ready bit in the Interrupt Flag register (INTFLAG.DRDY), indicating data are needed for transmit. If a NACK is sent, the I²C Client will wait for a new start condition and address match.

© 2025 Microchip Technology Inc. and its subsidiaries

Typically, software will immediately acknowledge the address packet by sending an ACK/NACK bit. The I^{2}C Client Command bit field in the Control B register (CTRLB.CMD) can be written to '0x3' for both read and write operations as the command execution is dependent on the STATUS.DIR bit. Writing '1' to INTFLAG.AMATCH will also cause an ACK/NACK to be sent corresponding to the CTRLB.ACKACT bit.

Case 2: Address packet accepted – Write flag set

The STATUS.DIR bit is cleared, indicating an I^{2}C Host write operation. The SCL line is forced low, stretching the bus clock. If an ACK is sent, the I^{2}C Client will wait for data to be received. Data, repeated start or stop can be received.

If a NACK is sent, the I^{2}C Client will wait for a new start condition and address match. Typically, software will immediately acknowledge the address packet by sending an ACK/NACK. The I^{2}C Client command CTRLB.CMD = 3 can be used for both read and write operation as the command execution is dependent on STATUS.DIR.

Writing '1' to INTFLAG.AMATCH will also cause an ACK/NACK to be sent corresponding to the CTRLB.ACKACT bit.

Receiving and Transmitting Data Packets

After the I^{2}C Client has received an address packet, it will respond according to the direction either by waiting for the data packet to be received or by starting to send a data packet by writing to DATA.DATA. When a data packet is received or sent, INTFLAG.DRDY will be set. After receiving data, the I^{2}C Client will send an acknowledge according to CTRLB.ACKACT.

Case 1: Data received

INTFLAG.DRDY is set, and SCL is held low, pending for SW interaction.

Case 2: Data sent

When a byte transmission is successfully completed, the INTFLAG.DRDY interrupt flag is set. If NACK is received, indicated by STATUS.RXNACK=1, the I^{2}C Client must expect a stop or a repeated start to be received. The I^{2}C Client must release the data line to allow the I^{2}C Host to generate a stop or repeated start. Upon detecting a stop condition, the Stop Received bit in the Interrupt Flag register (INTFLAG.PREC) will be set and the I^{2}C Client will return to IDLE state.

25.6.3. Additional Features

25.6.3.1. SMBus

The I^{2}C includes three hardware SCL low time-outs which allow a time-out to occur for SMBus SCL low time-out, host extend time-out, and client extend time-out. This allows for SMBus functionality These time-outs are driven by the GCLK_SERCOM_SLOW clock. The GCLK_SERCOM_SLOW clock is used to accurately time the time-out and must be configured to use a 32.768 kHz oscillator. The I^{2}C interface also allows for a SMBus compatible SDA hold time.

- **$T_{TIMEOUT}$:** SCL low time of 25..35ms – Measured for a single SCL low period. It is enabled by CTRLA.LOWTOUTEN
- **$T_{LOW:SEXT}$:** Cumulative clock low extend time of 25 ms – Measured as the cumulative SCL low extend time by a client device in a single message from the initial START to the STOP. It is enabled by CTRLA.SEXTTOEN.
- **$T_{LOW:MEXT}$:** Cumulative clock low extend time of 10 ms – Measured as the cumulative SCL low extend time by the host device within a single byte from START-to-ACK, ACK-to-ACK, or ACK-to-STOP. It is enabled by CTRLA.MEXTTOEN.

25.6.3.2. Smart Mode

The I^{2}C interface has a Smart mode that simplifies application code and minimizes the user interaction needed to adhere to the I^{2}C protocol. The Smart mode accomplishes this by

© 2025 Microchip Technology Inc. and its subsidiaries

automatically issuing an ACK or NACK (based on the content of CTRLB.ACKACT) as soon as DATA.DATA is read.

25.6.3.3. 4-Wire Mode

Writing a '1' to the Pin Usage bit in the Control A register (CTRLA.PINOUT) will enable 4-Wire mode operation. In this mode, the internal I^{2}C tri-state drivers are bypassed, and an external I^{2}C compliant tri-state driver is needed when connecting to an I^{2}C bus.

Figure 25-7. I^{2}C Pad Interface

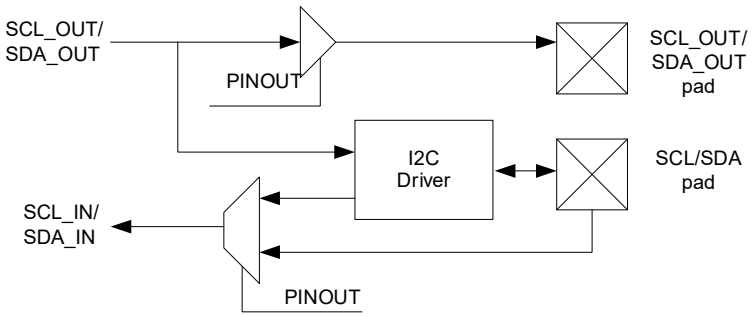

25.6.3.4. Quick Command

Setting the Quick Command Enable bit in the Control B register (CTRLB.QCEN) enables quick command. When quick command is enabled, the corresponding Interrupt flag (INTFLAG.SB or INTFLAG.MB) is set immediately after the client acknowledges the address. At this point, the software can either issue a Stop command or a repeated start by writing CTRLB.CMD or ADDR.ADDR.

25.6.4. Interrupts

The I^{2}C Client has the following interrupt sources. These are asynchronous interrupts. They can wake-up the device from any sleep mode:

- Data Ready (DRDY)
- Address Match (AMATCH)
- Stop Received (PREC)

The I^{2}C Host has the following interrupt sources. These are asynchronous interrupts. They can wake-up the device from any sleep mode:

- Client on Bus (SB)
- Host on Bus (MB)

Each interrupt source has its own interrupt flag. The interrupt flag in the Interrupt Flag Status and Clear register (INTFLAG) will be set when the interrupt condition is meet. Each interrupt can be individually enabled by writing ‘1’ to the corresponding bit in the Interrupt Enable Set register (INTENSET), and disabled by writing ‘1’ to the corresponding bit in the Interrupt Enable Clear register (INTENCLR). An interrupt request is generated when the interrupt flag is set and the corresponding interrupt is enabled. The interrupt request active until the interrupt flag is cleared, the interrupt is disabled or the I^{2}C is reset. Refer to *INTFLAG* register for details on how to clear interrupt flags.

The I^{2}C has one common interrupt request line for all the interrupt sources. The value of INTFLAG indicates which interrupt is executed. Note that interrupts must be globally enabled for interrupt requests. Refer to *Nested Vector Interrupt Controller* for details.

25.6.5. Sleep Mode Operation

I^{2}C Host Operation

© 2025 Microchip Technology Inc. and its subsidiaries

The generic clock (GCLK_SERCOMx_CORE) will continue to run in idle sleep mode. If the Run In Standby bit in the Control A register (CTRLA.RUNSTDBY) is '1', the GLK_SERCOMx_CORE will also run in Standby Sleep mode. Any interrupt can wake-up the device.

If CTRLA.RUNSTDBY=0, the GLK_SERCOMx_CORE will be disabled after any ongoing transaction is finished. Any interrupt can wake-up the device.

I^2C Client Operation

Writing CTRLA.RUNSTDBY=1 will allow the Address Match interrupt to wake-up the device.

When CTRLA.RUNSTDBY=0, all receptions will be dropped.

25.6.6. Synchronization

Due to asynchronicity between the main clock domain and the peripheral clock domains, some registers need to be synchronized when written or read.

The following bits are synchronized when written:

- Software Reset bit in the CTRLA register (CTRLA.SWRST)
- Enable bit in the CTRLA register (CTRLA.ENABLE)
- Command bits in CTRLB register (CTRLB.CMD)
- Write to Bus State bits in the Status register (STATUS.BUSSTATE)
- Address bits in the Address register (ADDR.ADDR) when in host operation.

The following registers are synchronized when written:

- Data (DATA) when in host operation

Required write synchronization is denoted by the "Write-Synchronized" property in the register description.

© 2025 Microchip Technology Inc. and its subsidiaries

25.7. Register Summary - I2C Client

Offset	Name	Bit Pos.	7	6	5	4	3	2	1	0
0x00	CTRLA	7:0	RUNSTDBY			MODE[2:0]			ENABLE	SWRST
		15:8								
		23:16			SDAHOLD[1:0]					PINOUT
		31:24		LOWTOUT						
0x04	CTRLB	7:0								
		15:8	AMODE[1:0]							SMEN
		23:16						ACKACT	CMD[1:0]	
		31:24								
0x08 ... 0x0B	Reserved									
0x0C	INTENCLR	7:0						DRDY	AMATCH	PREC
0x0D	INTENSET	7:0						DRDY	AMATCH	PREC
0x0E	INTFLAG	7:0						DRDY	AMATCH	PREC
0x0F	Reserved									
0x10	STATUS	7:0	CLKHOLD	LOWTOUT		SR	DIR	RXNACK	COLL	BUSERR
		15:8	SYNCBUSY							
0x12 ... 0x13	Reserved									
0x14	ADDR	7:0	ADDR[6:0]							GENCEN
		15:8								ADDR[7]
		23:16	ADDRMASK[6:0]							
		31:24								
0x18	DATA	7:0	DATA[7:0]							
		15:8								

© 2025 Microchip Technology Inc. and its subsidiaries

25.7.1. Control A

Name: CTRLA
Offset: 0x00
Reset: 0x00000000
Property: PAC Write-Protection, Enable-Protected, Write-Synchronized

Table 25-1. Register Bit Attribute Legend

Symbol	Description	Symbol	Description	Symbol	Description
R	Readable bit	**HC**	Cleared by Hardware	(Grey cell)	Unimplemented
W	Writable bit	**HS**	Set by Hardware	**X**	Bit is unknown at Reset
K	Write to clear	**S**	Software settable bit	—	—

Bit	31	30	29	28	27	26	25	24
		LOWTOUT						
Access		R/W						
Reset		0						

Bit	23	22	21	20	19	18	17	16
			SDAHOLD[1:0]					PINOUT
Access			R/W	R/W				R/W
Reset			0	0				0

Bit	15	14	13	12	11	10	9	8
Access								
Reset								

Bit	7	6	5	4	3	2	1	0
	RUNSTDBY			MODE[2:0]			ENABLE	SWRST
Access	R/W			R/W	R/W	R/W	R/W	R/W
Reset	0			0	0	0	0	0

Bit 30 – LOWTOUT SCL Low Time-Out

This bit enables the SCL low time-out. If SCL is held low for 25ms-35ms, the Client will release its clock hold, if enabled, and reset the internal state machine. Any interrupt flags set at the time of time-out will remain set.

Value	Description
0	Time-out disabled.
1	Time-out enabled.

Bits 21:20 – SDAHOLD[1:0] SDA Hold Time

These bits define the SDA hold time with respect to the negative edge of SCL.
These bits are not synchronized.

Value	Name	Description
0x0	DIS	Disabled
0x1	75NS	50-100ns hold time
0x2	450NS	300-600ns hold time
0x3	600NS	400-800ns hold time

Bit 16 – PINOUT Pin Usage

This bit sets the pin usage to either two- or four-wire operation:

© 2025 Microchip Technology Inc. and its subsidiaries

This bit is not synchronized.

Value	Description
0	4-wire operation disabled
1	4-wire operation enabled

Bit 7 – RUNSTDBY Run in Standby

This bit defines the functionality in standby sleep mode.
This bit is not synchronized.

Value	Description
0	Disabled – All reception is dropped.
1	Wake on address match, if enabled.

Bits 4:2 – MODE[2:0] Operating Mode

These bits must be written to 0x04 to select the I^2C Client serial communication interface of the SERCOM.
These bits are not synchronized.

Bit 1 – ENABLE Enable

Due to synchronization, there is delay from writing CTRLA.ENABLE until the peripheral is enabled/disabled. The value written to CTRL.ENABLE will read back immediately and the Enable Synchronization Busy bit in the Synchronization Busy register (SYNCBUSY.ENABLE) will be set. SYNCBUSY.ENABLE will be cleared when the operation is complete.
This bit is not enable-protected.

Value	Description
0	The peripheral is disabled or being disabled.
1	The peripheral is enabled.

Bit 0 – SWRST Software Reset

Writing '0' to this bit has no effect.
Writing '1' to this bit resets all registers in the SERCOM, except DBGCTRL, to their initial state, and the SERCOM will be disabled.
Writing '1' to CTRLA.SWRST will always take precedence, meaning that all other writes in the same write-operation will be discarded. Any register write access during the ongoing reset will result in an APB error. Reading any register will return the reset value of the register.
Due to synchronization, there is a delay from writing CTRLA.SWRST until the reset is complete. CTRLA.SWRST and SYNCBUSY.SWRST will both be cleared when the reset is complete.
This bit is not enable-protected.

Value	Description
0	There is no reset operation ongoing.
1	The reset operation is ongoing.

© 2025 Microchip Technology Inc. and its subsidiaries

25.7.2. Control B

Name: CTRLB
Offset: 0x04
Reset: 0x00000000
Property: PAC Write-Protection, Enable-Protected, Write-Synchronized

Table 25-2. Register Bit Attribute Legend

Symbol	Description	Symbol	Description	Symbol	Description
R	Readable bit	**HC**	Cleared by Hardware	(Grey cell)	Unimplemented
W	Writable bit	**HS**	Set by Hardware	**X**	Bit is unknown at Reset
K	Write to clear	**S**	Software settable bit	—	—

Bit	31	30	29	28	27	26	25	24
Access								
Reset								

Bit	23	22	21	20	19	18	17	16
						ACKACT	CMD[1:0]	
Access						R/W	R/W	R/W
Reset						0	0	0

Bit	15	14	13	12	11	10	9	8
	AMODE[1:0]							SMEN
Access	R/W	R/W						R/W
Reset	0	0						0

Bit	7	6	5	4	3	2	1	0
Access								
Reset								

Bit 18 – ACKACT Acknowledge Action

This bit defines the Client's acknowledge behavior after an address or data byte is received from the Host. The acknowledge action is executed when a command is written to the CMD bits. If smart mode is enabled (CTRLB.SMEN=1), the acknowledge action is performed when the DATA register is read.
This bit is not enable-protected.

Value	Description
0	Send ACK
1	Send NACK

Bits 17:16 – CMD[1:0] Command

This bit field triggers the Client operation as the below. The CMD bits are strobe bits, and always read as zero. The operation is dependent on the Client interrupt flags, INTFLAG.DRDY and INTFLAG.AMATCH, in addition to STATUS.DIR.
All interrupt flags (INTFLAG.DRDY, INTFLAG.AMATCH and INTFLAG.PREC) are automatically cleared when a command is given.
This bit is not enable-protected.

© 2025 Microchip Technology Inc. and its subsidiaries

Table 25-3. Command Description

CMD[1:0]	DIR	Action
0x0	X	(No action)
0x1	X	(Reserved)
0x2	Used to complete a transaction in response to a data interrupt (DRDY)	
	0 (Host write)	Execute acknowledge action succeeded by waiting for any start (S/Sr) condition
	1 (Host read)	Wait for any start (S/Sr) condition
0x3	Used in response to an address interrupt (AMATCH)	
	0 (Host write)	Execute acknowledge action succeeded by reception of next byte
	1 (Host read)	Execute acknowledge action succeeded by Client data interrupt
	Used in response to a data interrupt (DRDY)	
	0 (Host write)	Execute acknowledge action succeeded by reception of next byte
	1 (Host read)	Execute a byte read operation followed by ACK/NACK reception

Bits 15:14 – AMODE[1:0] Address Mode

These bits set the addressing mode.
These bits are not write-synchronized.

Value	Name	Description
0x0	MASK	The Client responds to the address written in ADDR.ADDR masked by the value in ADDR.ADDRMASK. See *SERCOM – Serial Communication Interface* for additional information.
0x1	2_ADDRS	The Client responds to the two unique addresses in ADDR.ADDR and ADDR.ADDRMASK.
0x2	RANGE	The Client responds to the range of addresses between and including ADDR.ADDR and ADDR.ADDRMASK. ADDR.ADDR is the upper limit.
0x3	-	Reserved.

Bit 8 – SMEN Smart Mode Enable

When smart mode is enabled, data is acknowledged automatically when DATA.DATA is read.
This bit is not write-synchronized.

Value	Description
0	Smart mode is disabled.
1	Smart mode is enabled.

© 2025 Microchip Technology Inc. and its subsidiaries

25.7.3. Interrupt Enable Clear

Name: INTENCLR
Offset: 0x0C
Reset: 0x00
Property: PAC Write-Protection

This register allows the user to disable an interrupt without doing a read-modify-write operation. Changes in this register will also be reflected in the Interrupt Enable Set register (INTENSET).

Table 25-4. Register Bit Attribute Legend

Symbol	Description	Symbol	Description	Symbol	Description
R	Readable bit	**HC**	Cleared by Hardware	(Grey cell)	Unimplemented
W	Writable bit	**HS**	Set by Hardware	**X**	Bit is unknown at Reset
K	Write to clear	**S**	Software settable bit	—	—

Bit	7	6	5	4	3	2	1	0
						DRDY	AMATCH	PREC
Access						R/W	R/W	R/W
Reset						0	0	0

Bit 2 – DRDY Data Ready Interrupt Enable
Writing '0' to this bit has no effect.
Writing '1' to this bit will clear the Data Ready bit, which disables the Data Ready interrupt.

Value	Description
0	The Data Ready interrupt is disabled.
1	The Data Ready interrupt is enabled.

Bit 1 – AMATCH Address Match Interrupt Enable
Writing '0' to this bit has no effect.
Writing '1' to this bit will clear the Address Match Interrupt Enable bit, which disables the Address Match interrupt.

Value	Description
0	The Address Match interrupt is disabled.
1	The Address Match interrupt is enabled.

Bit 0 – PREC Stop Received Interrupt Enable
Writing '0' to this bit has no effect.
Writing '1' to this bit will clear the Stop Received Interrupt Enable bit, which disables the Stop Received interrupt.

Value	Description
0	The Stop Received interrupt is disabled.
1	The Stop Received interrupt is enabled.

© 2025 Microchip Technology Inc. and its subsidiaries

25.7.4. Interrupt Enable Set

Name: INTENSET
Offset: 0x0D
Reset: 0x00
Property: PAC Write-Protection

This register allows the user to enable an interrupt without doing a read-modify-write operation. Changes in this register will also be reflected in the Interrupt Enable Clear register (INTENCLR).

Table 25-5. Register Bit Attribute Legend

Symbol	Description	Symbol	Description	Symbol	Description
R	Readable bit	**HC**	Cleared by Hardware	(Grey cell)	Unimplemented
W	Writable bit	**HS**	Set by Hardware	**X**	Bit is unknown at Reset
K	Write to clear	**S**	Software settable bit	—	—

Bit	7	6	5	4	3	2	1	0
						DRDY	AMATCH	PREC
Access						R/W	R/W	R/W
Reset						0	0	0

Bit 2 – DRDY Data Ready Interrupt Enable
Writing '0' to this bit has no effect.
Writing '1' to this bit will set the Data Ready bit, which enables the Data Ready interrupt.

Value	Description
0	The Data Ready interrupt is disabled.
1	The Data Ready interrupt is enabled.

Bit 1 – AMATCH Address Match Interrupt Enable
Writing '0' to this bit has no effect.
Writing '1' to this bit will set the Address Match Interrupt Enable bit, which enables the Address Match interrupt.

Value	Description
0	The Address Match interrupt is disabled.
1	The Address Match interrupt is enabled.

Bit 0 – PREC Stop Received Interrupt Enable
Writing '0' to this bit has no effect.
Writing '1' to this bit will set the Stop Received Interrupt Enable bit, which enables the Stop Received interrupt.

Value	Description
0	The Stop Received interrupt is disabled.
1	The Stop Received interrupt is enabled.

© 2025 Microchip Technology Inc. and its subsidiaries

25.7.5. Interrupt Flag Status and Clear

Name: INTFLAG
Offset: 0x0E
Reset: 0x00
Property: -

Table 25-6. Register Bit Attribute Legend

Symbol	Description	Symbol	Description	Symbol	Description
R	Readable bit	**HC**	Cleared by Hardware	(Grey cell)	Unimplemented
W	Writable bit	**HS**	Set by Hardware	**X**	Bit is unknown at Reset
K	Write to clear	**S**	Software settable bit	—	—

Bit	7	6	5	4	3	2	1	0
						DRDY	AMATCH	PREC
Access						R/W	R/W	R/W
Reset						0	0	0

Bit 2 – DRDY Data Ready

This flag is set when a I^{2}C Client byte transmission is successfully completed.
The flag is cleared by hardware when either:

- Writing to the DATA register.
- Reading the DATA register with smart mode enabled.
- Writing a valid command to the CMD register.

Writing '0' to this bit has no effect.
Writing '1' to this bit will clear the Data Ready interrupt flag.

Bit 1 – AMATCH Address Match

This flag is set when the I^{2}C Client address match logic detects that a valid address has been received.
The flag is cleared by hardware when CTRL.CMD is written.
Writing '0' to this bit has no effect.
Writing '1' to this bit will clear the Address Match interrupt flag. When cleared, an ACK/NACK will be sent according to CTRLB.ACKACT.

Bit 0 – PREC Stop Received

This flag is set when a stop condition is detected for a transaction being processed. A stop condition detected between a bus Host and another Client will not set this flag, unless the PMBus Group Command is enabled in the Control B register (CTRLB.GCMD=1).
This flag is cleared by hardware after a command is issued on the next address match.
Writing '0' to this bit has no effect.
Writing '1' to this bit will clear the Stop Received interrupt flag.

© 2025 Microchip Technology Inc. and its subsidiaries

25.7.6. Status

Name: STATUS
Offset: 0x10
Reset: 0x0000
Property: -

Table 25-7. Register Bit Attribute Legend

Symbol	Description	Symbol	Description	Symbol	Description
R	Readable bit	**HC**	Cleared by Hardware	(Grey cell)	Unimplemented
W	Writable bit	**HS**	Set by Hardware	**X**	Bit is unknown at Reset
K	Write to clear	**S**	Software settable bit	—	—

Bit	15	14	13	12	11	10	9	8
	SYNCBUSY							
Access	R/W							
Reset	0							

Bit	7	6	5	4	3	2	1	0
	CLKHOLD	LOWTOUT		SR	DIR	RXNACK	COLL	BUSERR
Access	R/W	R/W		R	R	R	R/W	R/W
Reset	0	0		0	0	0	0	0

Bit 15 – SYNCBUSY Synchronization Busy
This bit is set when the synchronization of registers between clock domains is started.
This bit is cleared when the synchronization of registers between the clock domains is complete.

Bit 7 – CLKHOLD Clock Hold
The Client Clock Hold (STATUS.CLKHOLD) bit is set when the Client is holding the SCL line low, stretching the I^2C clock. Software must consider this bit a read-only status flag that is set when INTFLAG.DRDY or INTFLAG.AMATCH is set.
This bit is cleared when the corresponding interrupt is cleared. If this bit is written as '1' while the SCL line is held low, the SCL line will be released. Writing '0' to this bit has no effect.

Bit 6 – LOWTOUT SCL Low Time-out
This bit is set if an SCL low time-out occurs.
This bit is cleared automatically if responding to a new start condition with ACK or NACK (write 3 to CTRLB.CMD) or when INTFLAG.AMATCH is cleared.
Writing a '0' to this bit has no effect.
Writing a '1' to this bit will clear the status.

Value	Description
0	No SCL low time-out has occurred.
1	SCL low time-out has occurred.

Bit 4 – SR Repeated Start
When INTFLAG.AMATCH is raised due to an address match, SR indicates a repeated start or start condition.
This flag is only valid while the INTFLAG.AMATCH flag is one.

Value	Description
0	Start condition on last address match
1	Repeated start condition on last address match

© 2025 Microchip Technology Inc. and its subsidiaries

Bit 3 – DIR Read / Write Direction

The Read/Write Direction (STATUS.DIR) bit stores the direction of the last address packet received from a Host.

Value	Description
0	Host write operation is in progress.
1	Host read operation is in progress.

Bit 2 – RXNACK Received Not Acknowledge

This bit indicates whether the last data packet sent was acknowledged or not.

Value	Description
0	Host responded with ACK.
1	Host responded with NACK.

Bit 1 – COLL Transmit Collision

If set, the I^2C Client was not able to transmit a high data or NACK bit, the I^2C Client will immediately release the SDA and SCL lines and wait for the next packet addressed to it.
This flag is intended for the SMBus address resolution protocol (ARP). A detected collision in non-ARP situations indicates that there has been a protocol violation, and should be treated as a bus error.
This status will not trigger any interrupt, and should be checked by software to verify that the data were sent correctly. This bit is cleared automatically if responding to an address match with an ACK or a NACK (writing 0x3 to CTRLB.CMD), or INTFLAG.AMATCH is cleared.
Writing a '0' to this bit has no effect.
Writing a '1' to this bit will clear the status.

Value	Description
0	No collision detected on last data byte sent.
1	Collision detected on last data byte sent.

Bit 0 – BUSERR Bus Error

The Bus Error bit (STATUS.BUSERR) indicates that an illegal bus condition has occurred on the bus, regardless of bus ownership. An illegal bus condition is detected if a protocol violating start, repeated start or stop is detected on the I^2C bus lines. A start condition directly followed by a stop condition is one example of a protocol violation. If a time-out occurs during a frame, this is also considered a protocol violation, and will set STATUS.BUSERR.
This bit is cleared automatically if responding to an address match with an ACK or a NACK (writing 0x3 to CTRLB.CMD) or INTFLAG.AMATCH is cleared.
Writing a '1' to this bit will clear the status.
Writing a '0' to this bit has no effect.

Value	Description
0	No bus error detected.
1	Bus error detected.

© 2025 Microchip Technology Inc. and its subsidiaries

25.7.7. Address

Name: ADDR
Offset: 0x14
Reset: 0x00000000
Property: PAC Write-Protection, Enable-Protected

Table 25-8. Register Bit Attribute Legend

Symbol	Description	Symbol	Description	Symbol	Description
R	Readable bit	**HC**	Cleared by Hardware	(Grey cell)	Unimplemented
W	Writable bit	**HS**	Set by Hardware	**X**	Bit is unknown at Reset
K	Write to clear	**S**	Software settable bit	—	—

Bit	31	30	29	28	27	26	25	24
Access								
Reset								

Bit	23	22	21	20	19	18	17	16
	ADDRMASK[6:0]							
Access	R/W	R/W	R/W	R/W	R/W	R/W	R/W	
Reset	0	0	0	0	0	0	0	

Bit	15	14	13	12	11	10	9	8
								ADDR[7]
Access								R/W
Reset								0

Bit	7	6	5	4	3	2	1	0
	ADDR[6:0]							GENCEN
Access	R/W	R/W	R/W	R/W	R/W	R/W	R/W	R/W
Reset	0	0	0	0	0	0	0	0

Bits 23:17 – ADDRMASK[6:0] Address Mask
These bits act as a second address match register, an address mask register or the lower limit of an address range, depending on the CTRLB.AMODE setting.

Bits 8:1 – ADDR[7:0] Address
These bits contain the I^{2}C Client address used by the Client address match logic to determine if a Host has addressed the Client.
When using 7-bit addressing, the Client address is represented by ADDR[6:0].
When the address match logic detects a match, INTFLAG.AMATCH is set and STATUS.DIR is updated to indicate whether it is a read or a write transaction.

Bit 0 – GENCEN General Call Address Enable
A general call address is an address consisting of all-zeroes, including the direction bit (Host write).

Value	Description
0	General call address recognition disabled.
1	General call address recognition enabled.

© 2025 Microchip Technology Inc. and its subsidiaries

25.7.8. Data

Name: DATA
Offset: 0x18
Reset: 0x0000
Property: Write-Synchronized, Read-Synchronized

Table 25-9. Register Bit Attribute Legend

Symbol	Description	Symbol	Description	Symbol	Description
R	Readable bit	**HC**	Cleared by Hardware	(Grey cell)	Unimplemented
W	Writable bit	**HS**	Set by Hardware	**X**	Bit is unknown at Reset
K	Write to clear	**S**	Software settable bit	—	—

Bit	15	14	13	12	11	10	9	8
Access								
Reset								

Bit	7	6	5	4	3	2	1	0
	DATA[7:0]							
Access	R/W	R/W	R/W	R/W	R/W	R/W	R/W	R/W
Reset	0	0	0	0	0	0	0	0

Bits 7:0 – DATA[7:0] Data

The Client data register I/O location (DATA.DATA) provides access to the Host transmit and receive data buffers. Reading valid data or writing data to be transmitted can be successfully done only when SCL is held low by the Client (STATUS.CLKHOLD is set). An exception occurs when reading the last data byte after the stop condition has been received.
Accessing DATA.DATA auto-triggers I^2C bus operations. The operation performed depends on the state of CTRLB.ACKACT, CTRLB.SMEN and the type of access (read/write).
Writing or reading DATA.DATA when not in smart mode does not require synchronization.

© 2025 Microchip Technology Inc. and its subsidiaries

25.8. Register Summary - I2C Host

Offset	Name	Bit Pos.	7	6	5	4	3	2	1	0
0x00	CTRLA	7:0	RUNSTDBY			MODE[2:0]			ENABLE	SWRST
		15:8								
		23:16			SDAHOLD[1:0]					PINOUT
		31:24		LOWTOUT	INACTOUT[1:0]					
0x04	CTRLB	7:0								
		15:8							QCEN	SMEN
		23:16						ACKACT	CMD[1:0]	
		31:24								
0x08	DBGCTRL	7:0								DBGSTOP
0x09	Reserved									
0x0A	BAUD	7:0	BAUD[7:0]							
		15:8	BAUDLOW[7:0]							
0x0C	INTENCLR	7:0							SB	MB
0x0D	INTENSET	7:0							SB	MB
0x0E	INTFLAG	7:0							SB	MB
0x0F	Reserved									
0x10	STATUS	7:0	CLKHOLD	LOWTOUT	BUSSTATE[1:0]			RXNACK	ARBLOST	BUSERR
		15:8						SYNCBUSY		
0x12 ... 0x13	Reserved									
0x14	ADDR	7:0	ADDR[7:0]							
		15:8								
0x16 ... 0x17	Reserved									
0x18	DATA	7:0	DATA[7:0]							
		15:8								

© 2025 Microchip Technology Inc. and its subsidiaries

25.8.1. Control A

Name: CTRLA
Offset: 0x00
Reset: 0x00000000
Property: PAC Write-Protection, Enable-Protected, Write-Synchronized

Table 25-10. Register Bit Attribute Legend

Symbol	Description	Symbol	Description	Symbol	Description
R	Readable bit	**HC**	Cleared by Hardware	(Grey cell)	Unimplemented
W	Writable bit	**HS**	Set by Hardware	**X**	Bit is unknown at Reset
K	Write to clear	**S**	Software settable bit	—	—

Bit	31	30	29	28	27	26	25	24
		LOWTOUT	INACTOUT[1:0]					
Access		R/W	R/W	R/W				
Reset		0	0	0				

Bit	23	22	21	20	19	18	17	16
			SDAHOLD[1:0]					PINOUT
Access			R/W	R/W				R/W
Reset			0	0				0

Bit	15	14	13	12	11	10	9	8
Access								
Reset								

Bit	7	6	5	4	3	2	1	0
	RUNSTDBY			MODE[2:0]			ENABLE	SWRST
Access	R/W			R/W	R/W	R/W	R/W	R/W
Reset	0			0	0	0	0	0

Bit 30 – LOWTOUT SCL Low Time-Out

This bit enables the SCL low time-out. If SCL is held low for 25ms-35ms, the Host will release its clock hold, if enabled, and complete the current transaction. A stop condition will automatically be transmitted.
INTFLAG.SB or INTFLAG.MB will be set as normal, but the clock hold will be released. The STATUS.LOWTOUT and STATUS.BUSERR status bits will be set.
This bit is not synchronized.

Value	Description
0	Time-out disabled.
1	Time-out enabled.

Bits 29:28 – INACTOUT[1:0] Inactive Time-Out

If the inactive bus time-out is enabled and the bus is inactive for longer than the time-out setting, the bus state logic will be set to idle. An inactive bus arise when either an I^2C Host or Client is holding the SCL low.
Enabling this option is necessary for SMBus compatibility, but can also be used in a non-SMBus set-up.
Calculated time-out periods are based on a 100kHz baud rate.
These bits are not synchronized.

© 2025 Microchip Technology Inc. and its subsidiaries

Value	Name	Description
0x0	DIS	Disabled
0x1	55US	5-6 SCL cycle time-out (50-60µs)
0x2	105US	10-11 SCL cycle time-out (100-110µs)
0x3	205US	20-21 SCL cycle time-out (200-210µs)

Bits 21:20 – SDAHOLD[1:0] SDA Hold Time

These bits define the SDA hold time with respect to the negative edge of SCL.
These bits are not synchronized.

Value	Name	Description
0x0	DIS	Disabled
0x1	75NS	50-100ns hold time
0x2	450NS	300-600ns hold time
0x3	600NS	400-800ns hold time

Bit 16 – PINOUT Pin Usage

This bit set the pin usage to either two- or four-wire operation:
This bit is not synchronized.

Value	Description
0	4-wire operation disabled.
1	4-wire operation enabled.

Bit 7 – RUNSTDBY Run in Standby

This bit defines the functionality in standby sleep mode.
This bit is not synchronized.

Value	Description
0	GCLK_SERCOMx_CORE is disabled and the I^2C Host will not operate in standby sleep mode.
1	GCLK_SERCOMx_CORE is enabled in all sleep modes.

Bits 4:2 – MODE[2:0] Operating Mode

These bits must be written to 0x5 to select the I^2C Host serial communication interface of the SERCOM.
These bits are not synchronized.

Bit 1 – ENABLE Enable

Due to synchronization, there is delay from writing CTRLA.ENABLE until the peripheral is enabled/disabled. The value written to CTRL.ENABLE will read back immediately and the Synchronization Enable Busy bit in the Synchronization Busy register (SYNCBUSY.ENABLE) will be set. SYNCBUSY.ENABLE will be cleared when the operation is complete.
This bit is not enable-protected.

Value	Description
0	The peripheral is disabled or being disabled.
1	The peripheral is enabled.

Bit 0 – SWRST Software Reset

Writing '0' to this bit has no effect.
Writing '1' to this bit resets all registers in the SERCOM, except DBGCTRL, to their initial state, and the SERCOM will be disabled.
Writing '1' to CTRLA.SWRST will always take precedence, meaning that all other writes in the same write-operation will be discarded. Any register write access during the ongoing reset will result in an APB error. Reading any register will return the reset value of the register.
Due to synchronization there is a delay from writing CTRLA.SWRST until the reset is complete. CTRLA.SWRST and SYNCBUSY.SWRST will both be cleared when the reset is complete.

© 2025 Microchip Technology Inc. and its subsidiaries

This bit is not enable-protected.

Value	Description
0	There is no reset operation ongoing.
1	The reset operation is ongoing.

© 2025 Microchip Technology Inc. and its subsidiaries

25.8.2. Control B

Name: CTRLB
Offset: 0x04
Reset: 0x00000000
Property: PAC Write-Protection, Enable-Protected, Write-Synchronized

Table 25-11. Register Bit Attribute Legend

Symbol	Description	Symbol	Description	Symbol	Description
R	Readable bit	**HC**	Cleared by Hardware	(Grey cell)	Unimplemented
W	Writable bit	**HS**	Set by Hardware	**X**	Bit is unknown at Reset
K	Write to clear	**S**	Software settable bit	—	—

Bit	31	30	29	28	27	26	25	24
Access								
Reset								

Bit	23	22	21	20	19	18	17	16
						ACKACT	CMD[1:0]	
Access						R/W	W	W
Reset						0	0	0

Bit	15	14	13	12	11	10	9	8
							QCEN	SMEN
Access							R/W	R/W
Reset							0	0

Bit	7	6	5	4	3	2	1	0
Access								
Reset								

Bit 18 – ACKACT Acknowledge Action

This bit defines the I^{2}C Host's acknowledge behavior after a data byte is received from the I^{2}C Client. The acknowledge action is executed when a command is written to CTRLB.CMD, or if Smart mode is enabled (CTRLB.SMEN is written to one), when DATA.DATA is read.
This bit is not enable-protected.
This bit is not write-synchronized.

Value	Description
0	Send ACK.
1	Send NACK.

Bits 17:16 – CMD[1:0] Command

Writing these bits triggers a Host operation as described below. The CMD bits are strobe bits, and always read as zero. The acknowledge action is only valid in Host Read mode. In Host Write mode, a command will only result in a repeated Start or Stop condition. The CTRLB.ACKACT bit and the CMD bits can be written at the same time, and then the acknowledge action will be updated before the command is triggered.
Commands can only be issued when either the Client on Bus Interrupt flag (INTFLAG.SB) or Host on Bus Interrupt flag (INTFLAG.MB) is '1'.

© 2025 Microchip Technology Inc. and its subsidiaries

If CMD 0x1 is issued, a repeated start will be issued followed by the transmission of the current address in ADDR.ADDR. If another address is desired, ADDR.ADDR must be written instead of the CMD bits. This will trigger a repeated start followed by transmission of the new address.
Issuing a command will set the System Operation bit in the Synchronization Busy register (SYNCBUSY.SYSOP).

Table 25-12. Command Description

CMD[1:0]	Direction	Action
0x0	X	(No action)
0x1	X	Execute acknowledge action succeeded by repeated Start
0x2	0 (Write)	No operation
	1 (Read)	Execute acknowledge action succeeded by a byte read operation
0x3	X	Execute acknowledge action succeeded by issuing a Stop condition

These bits are not enable-protected.

Bit 9 – QCEN Quick Command Enable
This bit is not write-synchronized.

Value	Description
0	Quick Command is disabled.
1	Quick Command is enabled.

Bit 8 – SMEN Smart Mode Enable
When Smart mode is enabled, acknowledge action is sent when DATA.DATA is read.
This bit is not write-synchronized.

Value	Description
0	Smart mode is disabled.
1	Smart mode is enabled.

© 2025 Microchip Technology Inc. and its subsidiaries

25.8.3. Debug Control

Name: DBGCTRL
Offset: 0x08
Reset: 0x00
Property: PAC Write-Protection

Table 25-13. Register Bit Attribute Legend

Symbol	Description	Symbol	Description	Symbol	Description
R	Readable bit	**HC**	Cleared by Hardware	(Grey cell)	Unimplemented
W	Writable bit	**HS**	Set by Hardware	**X**	Bit is unknown at Reset
K	Write to clear	**S**	Software settable bit	—	—

Bit	7	6	5	4	3	2	1	0
								DBGSTOP
Access								R/W
Reset								0

Bit 0 – DBGSTOP Debug Stop Mode
This bit controls functionality when the CPU is halted by an external debugger.

Value	Description
0	The baud-rate generator continues normal operation when the CPU is halted by an external debugger.
1	The baud-rate generator is halted when the CPU is halted by an external debugger.

© 2025 Microchip Technology Inc. and its subsidiaries

25.8.4. Baud Rate

Name: BAUD
Offset: 0x0A
Reset: 0x0000
Property: PAC Write-Protection, Enable-Protected

Table 25-14. Register Bit Attribute Legend

Symbol	Description	Symbol	Description	Symbol	Description
R	Readable bit	**HC**	Cleared by Hardware	(Grey cell)	Unimplemented
W	Writable bit	**HS**	Set by Hardware	**X**	Bit is unknown at Reset
K	Write to clear	**S**	Software settable bit	—	—

Bit	15	14	13	12	11	10	9	8
	BAUDLOW[7:0]							
Access	R/W	R/W	R/W	R/W	R/W	R/W	R/W	R/W
Reset	0	0	0	0	0	0	0	0

Bit	7	6	5	4	3	2	1	0
	BAUD[7:0]							
Access	R/W	R/W	R/W	R/W	R/W	R/W	R/W	R/W
Reset	0	0	0	0	0	0	0	0

Bits 15:8 – BAUDLOW[7:0] Host Baud Rate Low
If this bit field is non-zero, the SCL low time will be described by the value written.
For more information on how to calculate the frequency, see SERCOM Clock Generation – Baud-Rate Generator.

Bits 7:0 – BAUD[7:0] Host Baud Rate
This bit field is used to derive the SCL high time if BAUD.BAUDLOW is non-zero. If BAUD.BAUDLOW is zero, BAUD will be used to generate both high and low periods of the SCL.
For more information on how to calculate the frequency, see SERCOM Clock Generation – Baud-Rate Generator.

© 2025 Microchip Technology Inc. and its subsidiaries

25.8.5. Interrupt Enable Clear

Name: INTENCLR
Offset: 0x0C
Reset: 0x00
Property: PAC Write-Protection

This register allows the user to disable an interrupt without doing a read-modify-write operation. Changes in this register will also be reflected in the Interrupt Enable Set register (INTENSET).

Table 25-15. Register Bit Attribute Legend

Symbol	Description	Symbol	Description	Symbol	Description
R	Readable bit	**HC**	Cleared by Hardware	(Grey cell)	Unimplemented
W	Writable bit	**HS**	Set by Hardware	**X**	Bit is unknown at Reset
K	Write to clear	**S**	Software settable bit	—	—

Bit	7	6	5	4	3	2	1	0
							SB	MB
Access							R/W	R/W
Reset							0	0

Bit 1 – SB Client on Bus Interrupt Enable
Writing '0' to this bit has no effect.
Writing '1' to this bit will clear the Client on Bus Interrupt Enable bit, which disables the Client on Bus interrupt.

Value	Description
0	The Client on Bus interrupt is disabled.
1	The Client on Bus interrupt is enabled.

Bit 0 – MB Host on Bus Interrupt Enable
Writing '0' to this bit has no effect.
Writing '1' to this bit will clear the Host on Bus Interrupt Enable bit, which disables the Host on Bus interrupt.

Value	Description
0	The Host on Bus interrupt is disabled.
1	The Host on Bus interrupt is enabled.

© 2025 Microchip Technology Inc. and its subsidiaries

25.8.6. Interrupt Enable Clear

Name: INTENSET
Offset: 0x0D
Reset: 0x00
Property: PAC Write-Protection

This register allows the user to enable an interrupt without doing a read-modify-write operation. Changes in this register will also be reflected in the Interrupt Enable Clear register (INTENCLR).

Table 25-16. Register Bit Attribute Legend

Symbol	Description	Symbol	Description	Symbol	Description
R	Readable bit	**HC**	Cleared by Hardware	(Grey cell)	Unimplemented
W	Writable bit	**HS**	Set by Hardware	**X**	Bit is unknown at Reset
K	Write to clear	**S**	Software settable bit	—	—

Bit	7	6	5	4	3	2	1	0
							SB	MB
Access							R/W	R/W
Reset							0	0

Bit 1 – SB Client on Bus Interrupt Enable
Writing '0' to this bit has no effect.
Writing '1' to this bit will set the Client on Bus Interrupt Enable bit, which enables the Client on Bus interrupt.

Value	Description
0	The Client on Bus interrupt is disabled.
1	The Client on Bus interrupt is enabled.

Bit 0 – MB Host on Bus Interrupt Enable
Writing '0' to this bit has no effect.
Writing '1' to this bit will set the Host on Bus Interrupt Enable bit, which enables the Host on Bus interrupt.

Value	Description
0	The Host on Bus interrupt is disabled.
1	The Host on Bus interrupt is enabled.

© 2025 Microchip Technology Inc. and its subsidiaries

25.8.7. Interrupt Flag Status and Clear

Name: INTFLAG
Offset: 0x0E
Reset: 0x00
Property: -

Table 25-17. Register Bit Attribute Legend

Symbol	Description	Symbol	Description	Symbol	Description
R	Readable bit	**HC**	Cleared by Hardware	(Grey cell)	Unimplemented
W	Writable bit	**HS**	Set by Hardware	**X**	Bit is unknown at Reset
K	Write to clear	**S**	Software settable bit	—	—

Bit	7	6	5	4	3	2	1	0
							SB	MB
Access							R/W	R/W
Reset							0	0

Bit 1 – SB Client on Bus

The Client on Bus flag (SB) is set when a byte is successfully received in Host read mode, i.e., no arbitration lost or bus error occurred during the operation. When this flag is set, the Host forces the SCL line low, stretching the I^2C clock period. The SCL line will be released and SB will be cleared on one of the following actions:

- Writing to ADDR.ADDR
- Writing to DATA.DATA
- Reading DATA.DATA when smart mode is enabled (CTRLB.SMEN)
- Writing a valid command to CTRLB.CMD

Writing '1' to this bit location will clear the SB flag. The transaction will not continue or be terminated until one of the above actions is performed.
Writing '0' to this bit has no effect.

Bit 0 – MB Host on Bus

This flag is set when a byte is transmitted in Host write mode. The flag is set regardless of the occurrence of a bus error or an arbitration lost condition. MB is also set when arbitration is lost during sending of NACK in Host read mode, or when issuing a start condition if the bus state is unknown. When this flag is set and arbitration is not lost, the Host forces the SCL line low, stretching the I^2C clock period. The SCL line will be released and MB will be cleared on one of the following actions:

- Writing to ADDR.ADDR
- Writing to DATA.DATA
- Reading DATA.DATA when smart mode is enabled (CTRLB.SMEN)
- Writing a valid command to CTRLB.CMD

Writing '1' to this bit location will clear the MB flag. The transaction will not continue or be terminated until one of the above actions is performed.
Writing '0' to this bit has no effect.

© 2025 Microchip Technology Inc. and its subsidiaries

25.8.8. Status

Name: STATUS
Offset: 0x10
Reset: 0x0000
Property: Write-Synchronized

Table 25-18. Register Bit Attribute Legend

Symbol	Description	Symbol	Description	Symbol	Description
R	Readable bit	**HC**	Cleared by Hardware	(Grey cell)	Unimplemented
W	Writable bit	**HS**	Set by Hardware	**X**	Bit is unknown at Reset
K	Write to clear	**S**	Software settable bit	—	—

Bit	15	14	13	12	11	10	9	8
						SYNCBUSY		
Access						R/W		
Reset						0		

Bit	7	6	5	4	3	2	1	0
	CLKHOLD	LOWTOUT	BUSSTATE[1:0]			RXNACK	ARBLOST	BUSERR
Access	R	R/W	R	R		R	R/W	R/W
Reset	0	0	0	0		0	0	0

Bit 10 – SYNCBUSY Synchronization Busy
This bit is cleared when the synchronization of registers between the clock domains is complete.
This bit is set when the synchronization of registers between clock domains is started.

Bit 7 – CLKHOLD Clock Hold
This bit is set when the Host is holding the SCL line low, stretching the I^{2}C clock. Software should consider this bit when INTFLAG.SB or INTFLAG.MB is set.
This bit is cleared when the corresponding interrupt flag is cleared and the next operation is given. If this bit is written while the SCL line is held low, the SCL line will be released.
This bit is not write-synchronized.

Bit 6 – LOWTOUT SCL Low Time-Out
This bit is set if an SCL low time-out occurs.
Writing '1' to this bit location will clear this bit. This flag is automatically cleared when writing to the ADDR register.
Writing '0' to this bit has no effect.
This bit is not write-synchronized.

Bits 5:4 – BUSSTATE[1:0] Bus State
These bits indicate the current I^{2}C bus state.
When in UNKNOWN state, writing 0x1 to BUSSTATE forces the bus state into the IDLE state. The bus state cannot be forced into any other state.
Writing BUSSTATE to idle will set SYNCBUSY.SYSOP.

Value	Name	Description
0x0	UNKNOWN	The bus state is unknown to the I^{2}C Host and will wait for a stop condition to be detected or wait to be forced into an idle state by software
0x1	IDLE	The bus state is waiting for a transaction to be initialized
0x2	OWNER	The I^{2}C Host is the current owner of the bus
0x3	BUSY	Some other I^{2}C Host owns the bus

© 2025 Microchip Technology Inc. and its subsidiaries

Bit 2 – RXNACK Received Not Acknowledge

This bit indicates whether the last address or data packet sent was acknowledged or not.
Writing '0' to this bit has no effect.
Writing '1' to this bit has no effect.
This bit is not write-synchronized.

Value	Description
0	Client responded with ACK.
1	Client responded with NACK.

Bit 1 – ARBLOST Arbitration Lost

This bit is set if arbitration is lost while transmitting a high data bit or a NACK bit, or while issuing a start or repeated start condition on the bus. The Host on Bus interrupt flag (INTFLAG.MB) will be set when STATUS.ARBLOST is set.
Writing the ADDR.ADDR register will automatically clear STATUS.ARBLOST.
Writing '0' to this bit has no effect.
Writing '1' to this bit will clear it.
This bit is not write-synchronized.

Bit 0 – BUSERR Bus Error

This bit indicates that an illegal bus condition has occurred on the bus, regardless of bus ownership. An illegal bus condition is detected if a protocol violating start, repeated start or stop is detected on the I^2C bus lines. A start condition directly followed by a stop condition is one example of a protocol violation. If a time-out occurs during a frame, this is also considered a protocol violation, and will set BUSERR.
If the I^2C Host is the bus owner at the time a bus error occurs, STATUS.ARBLOST and INTFLAG.MB will be set in addition to BUSERR.
Writing the ADDR.ADDR register will automatically clear the BUSERR flag.
Writing '0' to this bit has no effect.
Writing '1' to this bit will clear it.
This bit is not write-synchronized.

© 2025 Microchip Technology Inc. and its subsidiaries

25.8.9. Address

Name: ADDR
Offset: 0x14
Reset: 0x0000
Property: Write-Synchronized

Table 25-19. Register Bit Attribute Legend

Symbol	Description	Symbol	Description	Symbol	Description
R	Readable bit	**HC**	Cleared by Hardware	(Grey cell)	Unimplemented
W	Writable bit	**HS**	Set by Hardware	**X**	Bit is unknown at Reset
K	Write to clear	**S**	Software settable bit	—	—

Bit	15	14	13	12	11	10	9	8
Access								
Reset								

Bit	7	6	5	4	3	2	1	0
	ADDR[7:0]							
Access	R/W	R/W	R/W	R/W	R/W	R/W	R/W	R/W
Reset	0	0	0	0	0	0	0	0

Bits 7:0 – ADDR[7:0] Address

When ADDR is written, the consecutive operation will depend on the bus state:
UNKNOWN: INTFLAG.MB and STATUS.BUSERR are set, and the operation is terminated.
BUSY: The I^2C Host will await further operation until the bus becomes IDLE.
IDLE: The I^2C Host will issue a start condition followed by the address written in ADDR. If the address is acknowledged, SCL is forced and held low, and STATUS.CLKHOLD and INTFLAG.MB are set.
OWNER: A repeated start sequence will be performed. If the previous transaction was a read, the acknowledge action is sent before the repeated start bus condition is issued on the bus. Writing ADDR to issue a repeated start is performed while INTFLAG.MB or INTFLAG.SB is set.
STATUS.BUSERR, STATUS.ARBLOST, INTFLAG.MB and INTFLAG.SB will be cleared when ADDR is written.
The ADDR register can be read at any time without interfering with ongoing bus activity, as a read access does not trigger the Host logic to perform any bus protocol related operations.
The I^2C Host control logic uses bit 0 of ADDR as the bus protocol's read/write flag (R/W); 0 for write and 1 for read.

© 2025 Microchip Technology Inc. and its subsidiaries

25.8.10. Data

Name: DATA
Offset: 0x18
Reset: 0x0000
Property: Write-Synchronized, Read-Synchronized

Table 25-20. Register Bit Attribute Legend

Symbol	Description	Symbol	Description	Symbol	Description
R	Readable bit	**HC**	Cleared by Hardware	(Grey cell)	Unimplemented
W	Writable bit	**HS**	Set by Hardware	**X**	Bit is unknown at Reset
K	Write to clear	**S**	Software settable bit	—	—

Bit	15	14	13	12	11	10	9	8
Access								
Reset								

Bit	7	6	5	4	3	2	1	0
	DATA[7:0]							
Access	R/W	R/W	R/W	R/W	R/W	R/W	R/W	R/W
Reset	0	0	0	0	0	0	0	0

Bits 7:0 – DATA[7:0] Data

The Host data register I/O location (DATA) provides access to the Host transmit and receive data buffers. Reading valid data or writing data to be transmitted can be successfully done only when SCL is held low by the Host (STATUS.CLKHOLD is set). An exception is reading the last data byte after the stop condition has been sent.

Accessing DATA.DATA auto-triggers I^2C bus operations. The operation performed depends on the state of CTRLB.ACKACT, CTRLB.SMEN and the type of access (read/write).

Writing or reading DATA.DATA when not in smart mode does not require synchronization.

© 2025 Microchip Technology Inc. and its subsidiaries

26. Timer/Counter (TC)

26.1. Overview

The TC consists of a counter, a prescaler, compare/capture channels and control logic. The counter can be set to count events, or it can be configured to count clock pulses. The counter, together with the compare/capture channels, can be configured to timestamp input events, allowing capture of frequency and pulse width. It can also perform waveform generation, such as frequency generation and pulse-width modulation (PWM).

26.2. Features

- Selectable configuration:
  - Up to eight 16-bit Timer/Counters (TC), each configurable as:
    - 8-bit TC with two compare/capture channels
    - 16-bit TC with two compare/capture channels
    - 32-bit TC with two compare/capture channels, by using two TCs
- Waveform Generation:
  - Frequency generation
  - Single-slope pulse-width modulation
- Input capture:
  - Event capture
  - Frequency capture
  - Pulse-width capture
- One input event
- Interrupts/output events on:
  - Counter overflow/underflow
  - Compare match or capture
- Internal prescaler

© 2025 Microchip Technology Inc. and its subsidiaries

26.3. Block Diagram

Figure 26-1. Timer/Counter Block Diagram

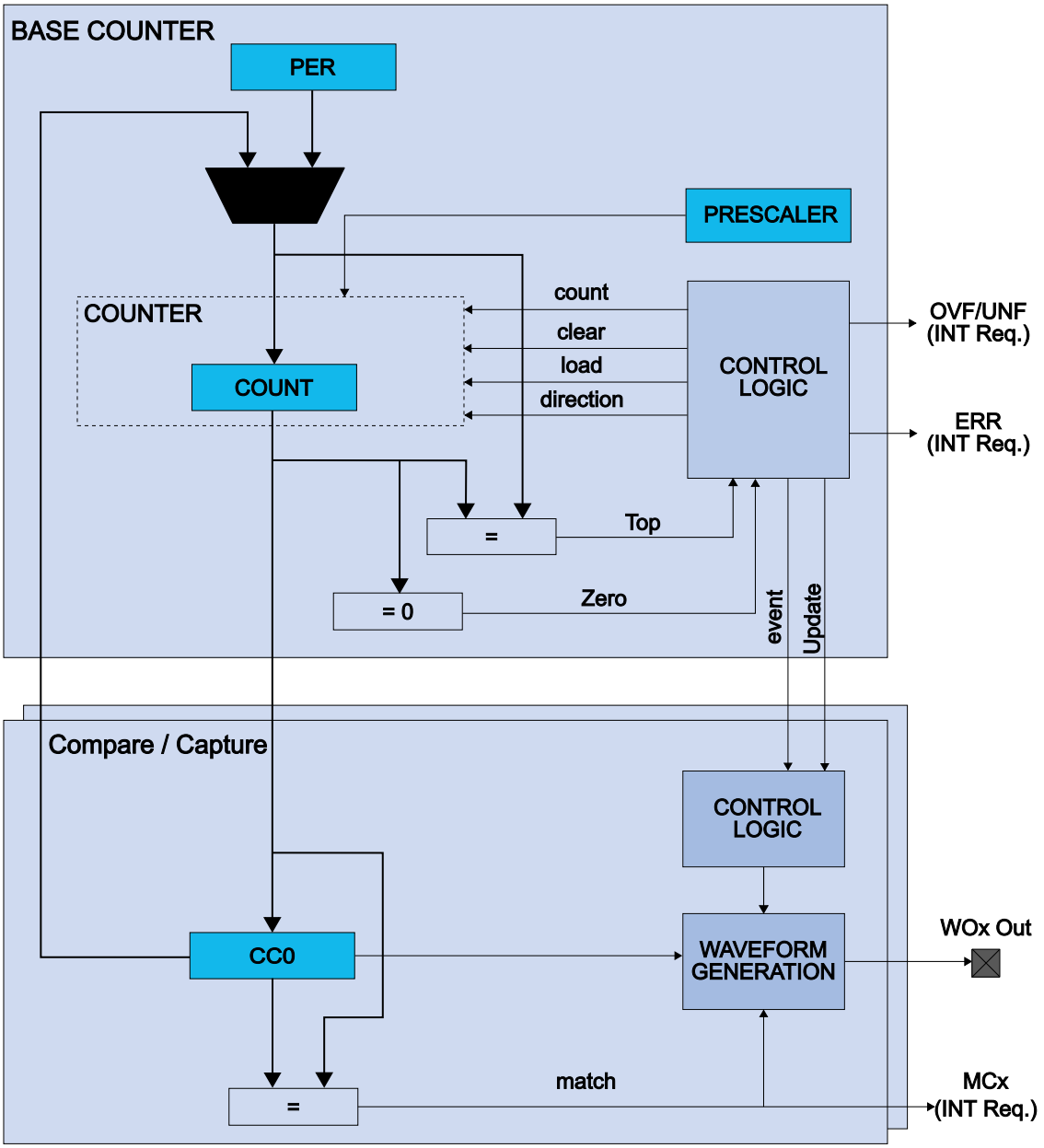

26.4. Signal Description

Signal Name	Type	Description
WO[1:0]	Digital output	Waveform output

Refer to *I/O Multiplexing and Considerations* for details on the pin mapping for this peripheral. One signal can be mapped on several pins.

© 2025 Microchip Technology Inc. and its subsidiaries

26.5. Peripheral Dependencies

Table 26-1. Peripherals Configuration Summary

Peripheral Name	Base Address	IRQ Line	AHB Clock		APB Clock		Generic Clock	PAC		Events		
			Index	Enabled at Reset	Index	Enabled at Reset	Index	Index	Prot at Reset	User	Generator	SleepWalking
TC0	0x42002000	13			8	N	19	8	N	0: TC	28: OVF 29-30: MC0-1	Y
TC1	0x42002400	14			9	N	19	9	N	1: TC	31: OVF 32-33: MC0-1	Y
TC2	0x42002800	15			10	N	20	10	N	2: TC	34: OVF 35-36: MC0-1	Y
TC3	0x42002C00	16			11	N	20	11	N	3: TC	37: OVF 38-39: MC0-1	Y
TC4	0x42003000	17			12	N	21	12	N	4: TC	40: OVF 41-42: MC0-1	Y
TC5	0x42003400	18			13	N	21	13	N	5: TC	43: OVF 44-45: MC0-1	Y
TC6	0x42003800	19			14	N	22	14	N	6: TC	46: OVF 47-48: MC0-1	Y
TC7	0x42003C00	20			15	N	22	15	N	7: TC	49: OVF 50-51: MC0-1	Y

26.5.1. I/O Lines

In order to use the I/O lines of this peripheral, the I/O pins must be configured using the I/O Pin Controller (PORT).

26.5.2. Power Management

This peripheral can continue to operate in any Sleep mode where its source clock is running. The interrupts can wake up the device from Sleep modes. Events connected to the event system can trigger other operations in the system without exiting Sleep modes.

26.5.3. Clocks

The TC bus clock (CLK_TCx_APB, where x represents the specific TC instance number) can be enabled and disabled in the Power Manager, and the default state of CLK_TCx_APB can be found in the *Peripheral Clock Masking* section in “PM – Power Manager”.

The different TC instances are paired, even and odd, starting from TC, and use the same generic clock, GCLK_TCx. This means that the TC instances in a TC pair cannot be set up to use different GCLK_TCx clocks.

This generic clock is asynchronous to the user interface clock (CLK_TCx_APB). Due to this asynchronicity, accessing certain registers will require synchronization between the clock domains. Refer to Synchronization for further details.

26.5.4. Interrupts

The interrupt request line is connected to the Interrupt Controller. In order to use interrupt requests of this peripheral, the Interrupt Controller (NVIC) must be configured first. Refer to *Nested Vector Interrupt Controller* for details.

26.5.5. Events

The events of this peripheral are connected to the Event System.

© 2025 Microchip Technology Inc. and its subsidiaries

26.5.6. Debug Operation

When the CPU is halted in Debug mode, this peripheral will halt normal operation. This peripheral can be forced to continue operation during debugging - refer to the Debug Control (DBGCTRL) register for details.

26.5.7. Register Access Protection

Registers with write access can be optionally write-protected by the Peripheral Access Controller (PAC), except for the following:

- Interrupt Flag register (INTFLAG)
- Status register (STATUS)
- Read Request register (READREQ)
- Count register (COUNT)
- Period register (PER)
- Compare/Capture Value registers (CCx)

Note: Optional write protection is indicated by the "PAC Write Protection" property in the register description.

Write protection does not apply for accesses through an external debugger.

26.5.8. Analog Connections

Not applicable.

26.6. Functional Description

26.6.1. Principle of Operation

The following definitions are used throughout the documentation:

Table 26-2. Timer/Counter Definitions

Name	Description
TOP	The counter reaches TOP when it becomes equal to the highest value in the count sequence. The TOP value can be the same as Period (PER) or the Compare Channel 0 (CC0) register value depending on the Waveform Generator mode in Waveform Output Operations.
ZERO	The counter is ZERO when it contains all zeroes
MAX	The counter reaches MAX when it contains all ones
UPDATE	The timer/counter signals an update when it reaches ZERO or TOP, depending on the direction settings
Timer	The timer/counter clock control is handled by an internal source
Counter	The clock control is handled externally (e.g. counting external events)
CC	For compare operations, the CC are referred to as “compare channels” For capture operations, the CC are referred to as “capture channels”

The counter in the TC can either count events from the Event System, or clock ticks of the GCLK_TCx clock, which may be divided by the prescaler.

The counter value is passed to the CCx where it can be either compared to user-defined values or captured.

The Compare and Capture registers (CCx) and Counter register (COUNT) can be configured as 8-, 16- or 32-bit registers, with according MAX values. Mode settings determine the maximum range of the counter.

© 2025 Microchip Technology Inc. and its subsidiaries

In 8-bit mode, Period Value (PER) is also available. The counter range and the operating frequency determine the maximum time resolution achievable with the TC peripheral.

The TC can be set to count up or down. Under normal operation, the counter value is continuously compared to the TOP or ZERO value to determine whether the counter has reached that value.

In compare operation, the counter value is continuously compared to the values in the CCx registers. In Waveform Generator mode, these comparisons are used to set the waveform period or pulse width.

Capture operation can be enabled to perform input signal period and pulse-width measurements, or to capture selectable edges from an internal event from Event System.

26.6.2. Basic Operation

26.6.2.1. Initialization

The following registers are enable-protected, meaning that they can only be written when the TC is disabled (CTRLA.ENABLE =0):

- Control A register (CTRLA), except the Run Standby (RUNSTDBY), Enable (ENABLE) and Software Reset (SWRST) bits

Enable-protected bits in the CTRLA register can be written at the same time as CTRLA.ENABLE is written to '1', but not at the same time as CTRLA.ENABLE is written to '0'. Enable-protection is denoted by the "Enable-Protected" property in the register description. The following bits are enable-protected:

- Event Action bits in the Event Control register (EVCTRL.EVACT)

Before enabling the TC, the peripheral must be configured by the following steps:

1. Enable the TC bus clock (CLK_TCx_APB).
2. Select 8-, 16- or 32-bit Counter mode via the TC Mode bit group in the Control A register (CTRLA.MODE). The default mode is 16-bit.
3. Select one wave generation operation in the Waveform Generation Operation bit group in the Control A register (CTRLA.WAVEGEN).
4. If desired, the GCLK_TCx clock can be prescaled via the Prescaler bit group in the Control A register (CTRLA.PRESCALER).
   - If the prescaler is used, select a prescaler synchronization operation via the Prescaler and Counter Synchronization bit group in the Control A register (CTRLA.PRESYNC).
5. Select one-shot operation by writing a '1' to the One-Shot bit in the Control B Set register (CTRLBSET.ONESHOT).
6. If desired, configure the counting direction 'down' (starting from the TOP value) by writing a '1' to the Counter Direction bit in the Control B register (CTRLBSET.DIR).
7. For capture operation, enable the individual channels to capture in the Capture Channel x Enable bit group in the Control C register (CTRLC.CPTEN).
8. If desired, enable inversion of the waveform output or I/O pin input signal for individual channels via the Waveform Output Invert Enable bit group in the Control C register (CTRLC.INVEN).

26.6.2.2. Enabling, Disabling and Resetting

The TC is enabled by writing a '1' to the Enable bit in the Control A register (CTRLA.ENABLE). The TC is disbled by writing a zero to CTRLA.ENABLE.

The TC is Reset by writing a one to the Software Reset bit in the Control A register (CTRLA.SWRST). All registers in the TC, except DBGCTRL, will be reset to their initial state, and the TC will be disabled. Refer to the CTRLA register for details.

The TC should be disabled before the TC is Reset in order to avoid undefined behavior.

© 2025 Microchip Technology Inc. and its subsidiaries

26.6.2.3. Prescaler Selection

The GCLK_TCx is fed into the internal prescaler.

The prescaler consists of a counter that counts up to the selected prescaler value, whereupon the output of the prescaler toggles.

If the prescaler value is higher than one, the Counter Update condition can be optionally executed on the next GCLK_TCx clock pulse or the next prescaled clock pulse. For further details, refer to Prescaler (CTRLA.PRESCALER) and Counter Synchronization (CTRLA.PRESYNC) description.

Prescaler outputs from 1 to 1/1024 are available. For a complete list of available prescaler outputs, see the register description for the Prescaler bit group in the Control A register (CTRLA.PRESCALER).

Note: When counting events, the prescaler is bypassed.

The joint stream of prescaler ticks and event action ticks is called CLK_TCx_CNT.

Figure 26-2. Prescaler

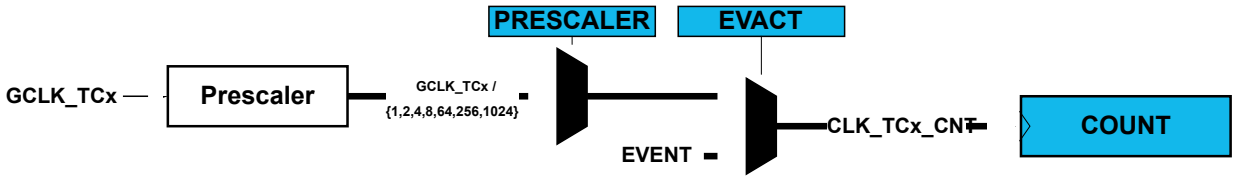

26.6.2.4. Counter Mode

The Counter mode is selected by the Mode bit group in the Control A register (CTRLA.MODE). By default, the counter is enabled in the 16-bit counter resolution. The following three counter resolutions are available:

- **COUNT8:** The 8-bit TC has its own Period register (PER). This register is used to store the period value that can be used as the top value for waveform generation.
- **COUNT16:** 16-bit is the default Counter mode. There is no dedicated Period register in this mode.
- **COUNT32:** This mode is achieved by pairing two 16-bit TC peripherals. In this mode, TC0 is paired with TC1, TC2 is paired with TC3, TC4 is paired with TC5, and TC6 is paired with TC7.

When paired, the TC peripherals are configured using the registers of the even-numbered TC . The odd-numbered partner will act as Client, and the Client bit in the Status register (STATUS.Client) will be set. The register values of a Client will not reflect the registers of the 32-bit counter. Writing to any of the Client registers will not affect the 32-bit counter. Normal access to the Client COUNT and CCx registers is not allowed.

26.6.2.5. Counter Operations

The counter can be set to count up or down. When the counter is counting up and the top value is reached, the counter will wrap around to zero on the next clock cycle. When counting down, the counter will wrap around to the top value when zero is reached. In One-shot mode, the counter will stop counting after a wraparound occurs.

The counting direction is set by the Direction bit in the Control B register (CTRLB.DIR). If this bit is zero the counter is counting up, and counting down if CTRLB.DIR=1. The counter will count up or down for each tick (clock or event) until it reaches TOP or ZERO. When it is counting up and TOP is reached, the counter will be set to zero at the next tick (overflow) and the Overflow Interrupt Flag in the Interrupt Flag Status and Clear register (INTFLAG.OVF) will be set. It is also possible to generate an event on overflow or underflow when the Overflow/Underflow Event Output Enable bit in the Event Control register (EVCTRL.OVFEO) is one.

It is possible to change the counter value (by writing directly in the COUNT register) even when the counter is running. When starting the TC, the COUNT value will be either ZERO or TOP (depending on the counting direction set by CTRLBSET.DIR or CTRLBCLR.DIR), unless a different value has been

© 2025 Microchip Technology Inc. and its subsidiaries

written to it, or the TC has been stopped at a value other than ZERO. The write access has higher priority than count, clear, or reload. The direction of the counter can also be changed during normal operation. See the figure below.

Figure 26-3. Counter Operation

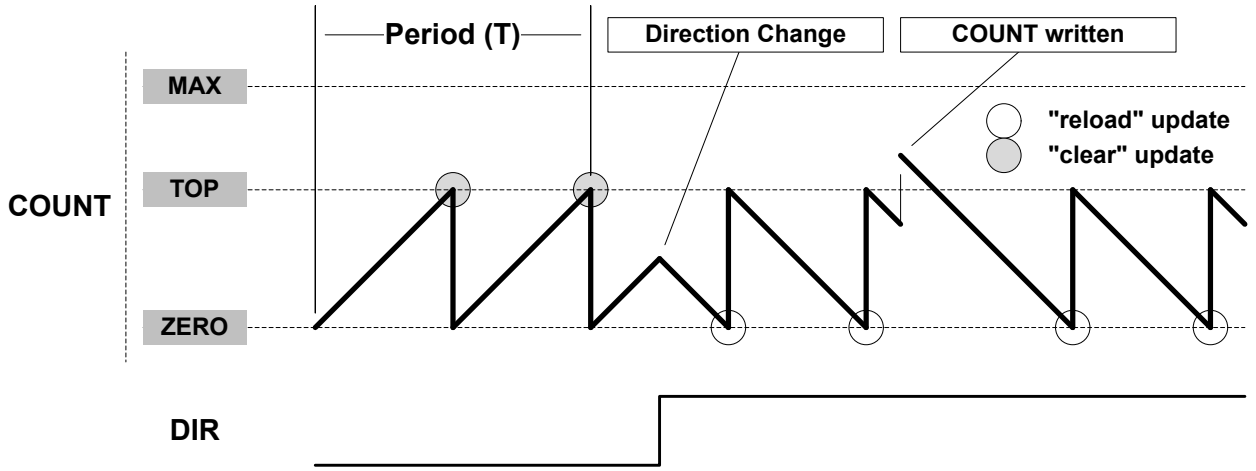

26.6.2.5.1. Stop Command and Event Action

A Stop command can be issued from software by using Command bits in the Control B Set register (CTRLBSET.CMD = 0x2, STOP). When a Stop is detected while the counter is running, the counter will not retain its current value. All waveforms are cleared and the Stop bit in the Status register is set (STATUS.STOP).

26.6.2.5.2. Re-Trigger Command and Event Action

A re-trigger command can be issued from software by writing the Command bits in the Control B Set register (CTRLBSET.CMD = 0x1, RETRIGGER), or from event when a re-trigger event action is configured in the Event Control register (EVCTRL.EVACT = 0x1, RETRIGGER).

When the command is detected during counting operation, the counter will be reloaded or cleared, depending on the counting direction (CTRLBSET.DIR or CTRLBCLR.DIR). When the re-trigger command is detected while the counter is stopped, the counter will resume counting from the current value in the COUNT register.

Note: When a re-trigger event action is configured in the Event Action bits in the Event Control register (EVCTRL.EVACT=0x1, RETRIGGER), enabling the counter will not start the counter. The counter will start on the next incoming event and restart on corresponding following event.

26.6.2.5.3. Count Event Action

The TC can count events. When an event is received, the counter increases or decreases the value, depending on direction settings (CTRLBSET.DIR or CTRLBCLR.DIR). The count event action can be selected by the Event Action bit group in the Event Control register (EVCTRL.EVACT=0x2, COUNT).

Note: If this operation mode is selected, PWM generation is not supported.

26.6.2.5.4. Start Event Action

The TC can start counting operation on an event when previously stopped. In this configuration, the event has no effect if the counter is already counting. When the peripheral is enabled, the counter operation starts when the event is received or when a re-trigger software command is applied.

The Start TC on Event action can be selected by the Event Action bit group in the Event Control register (EVCTRL.EVACT=0x3, START).

26.6.2.6. Compare Operations

By default, the Compare/Capture channel is configured for compare operations.

© 2025 Microchip Technology Inc. and its subsidiaries

When using the TC and the Compare/Capture Value registers (CCx) for compare operations, the counter value is continuously compared to the values in the CCx registers. This can be used for timer or for waveform operation.

26.6.2.6.1. Waveform Output Operations

The compare channels can be used for waveform generation on output port pins. To make the waveform available on the connected pin, the following requirements must be fulfilled:

1. Choose a Waveform Generation mode in the Waveform Generation Operation bit in Waveform register (CTRLA.WAVEGEN).
2. Optionally invert the waveform output by writing the corresponding Waveform Output Invert Enable bit in the Control C register (CTRLC.INVx).
3. Configure the pins with the I/O Pin Controller. Refer to *PORT - I/O Pin Controller* for details.

The counter value is continuously compared with each CCx value. On a comparison match, the Match or Capture Channel x bit in the Interrupt Flag Status and Clear register (INTFLAG.MCx) will be set on the next zero-to-one transition of CLK_TC_CNT (see the next figure). An interrupt/and or event can be generated on comparison match when INTENSET.MCx=1 and/or EVCTRL.MCEOx=1.

There are four waveform configurations for the Waveform Generation Operation bit group in the Control A register (CTRLA.WAVEGEN) . This will influence how the waveform is generated and impose restrictions on the top value. The configurations are:

- Normal frequency (NFRQ)
- Match frequency (MFRQ)
- Normal pulse-width modulation (NPWM)
- Match pulse-width modulation (MPWM)

When using NPWM or NFRQ configuration, the TOP will be determined by the counter resolution. In 8-bit Counter mode, the Period register (PER) is used as TOP, and the TOP can be changed by writing to the PER register. In 16- and 32-bit Counter mode, TOP is fixed to the maximum (MAX) value of the counter.

26.6.2.6.2. Frequency Operation

Normal Frequency Generation (NFRQ)

For Normal Frequency Generation, the period time (T) is controlled by the period register (PER) . The waveform generation output (WO[x]) is toggled on each compare match between COUNT and CCx, and the corresponding Match or Capture Channel x Interrupt Flag (INTFLAG.MCx) will be set.

Figure 26-4. Normal Frequency Operation

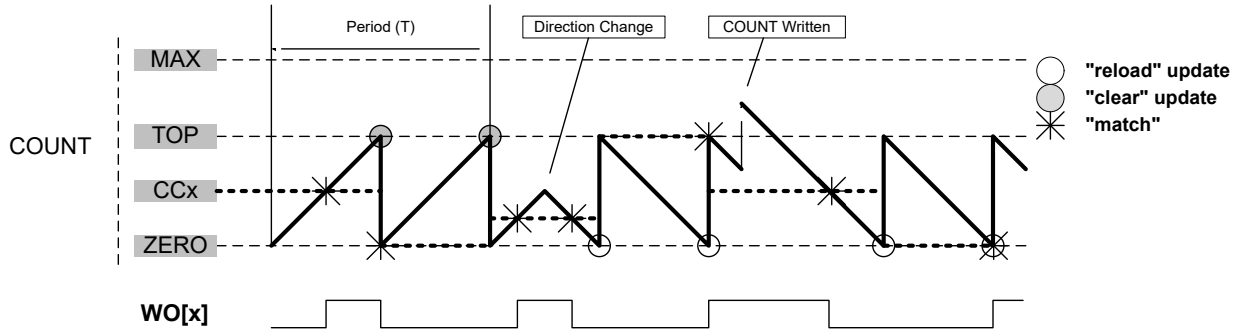

Match Frequency Generation (MFRQ)

For Match Frequency Generation, the period time (T) is controlled by the CC0 register instead of PER or MAX. WO[0] toggles on each update condition.

© 2025 Microchip Technology Inc. and its subsidiaries

Figure 26-5. Match Frequency Operation

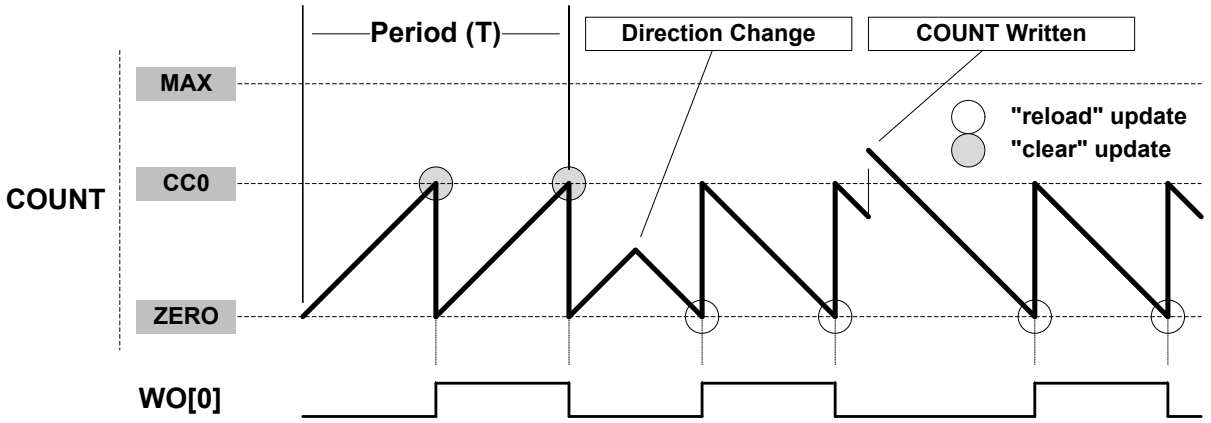

26.6.2.6.3. PWM Operation

Normal Pulse-Width Modulation Operation (NPWM)

NPWM uses single-slope PWM generation.

For single-slope PWM generation, the period time (T) is controlled by the TOP value, and CCx controls the duty cycle of the generated waveform output. When up-counting, the WO[x] is set at start or compare match between the COUNT and TOP values, and cleared on compare match between COUNT and CCx register values. When down-counting, the WO[x] is cleared at start or compare match between the COUNT and ZERO values, and set on compare match between COUNT and CCx register values.

The following equation calculates the exact resolution for a single-slope PWM (R_{PWM_SS}) waveform:

$$R_{PWM_SS} = \frac{\log(TOP+1)}{\log(2)}$$

The PWM frequency (f_{PWM_SS}) depends on TOP value and the peripheral clock frequency (f_{GCLK_TC}), and can be calculated by the following equation:

$$f_{PWM_SS} = \frac{f_{GCLK_TC}}{N(TOP+1)}$$

Where N represents the prescaler divider used (1, 2, 4, 8, 16, 64, 256, 1024).

Match Pulse-Width Modulation Operation (MPWM)

In MPWM, the output of WO[1] is depending on CC1 as shown in the figure below. On every overflow/underflow, a one-TC-clock-cycle negative pulse is put out on WO[0] (not shown in the figure).

Figure 26-6. Match PWM Operation

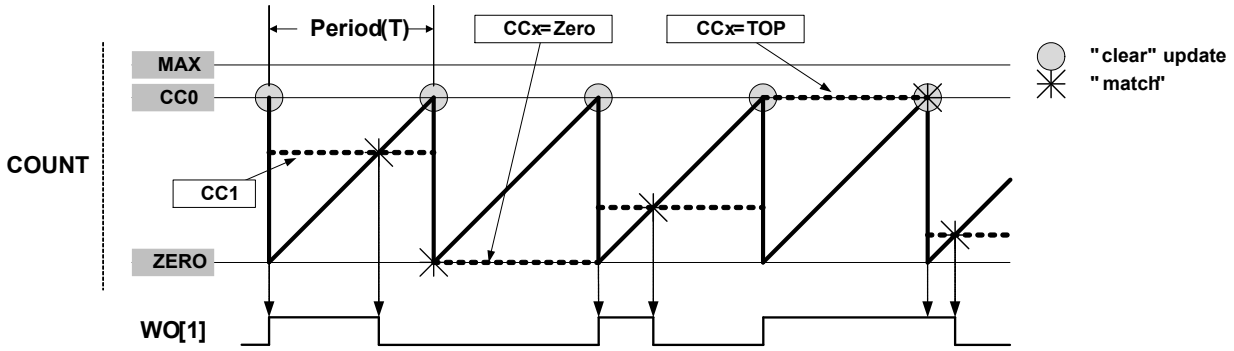

© 2025 Microchip Technology Inc. and its subsidiaries

The table below shows the update counter and overflow event/interrupt generation conditions in different operation modes.

Table 26-3. Counter Update and Overflow Event/interrupt Conditions in TC

Name	Operation	TOP	Update	Output Waveform		OVFIF/Event	
				On Match	On Update	Up	Down
NFRQ	Normal Frequency	PER	TOP/ ZERO	Toggle	Stable	TOP	ZERO
MFRQ	Match Frequency	CC0	TOP/ ZERO	Toggle	Stable	TOP	ZERO
NPWM	Single-slope PWM	PER	TOP/ ZERO	See description above.		TOP	ZERO
MPWM	Single-slope PWM	CC0	TOP/ ZERO	Toggle	Toggle	TOP	ZERO

26.6.2.6.4. Changing the Top Value

The counter period is changed by writing a new TOP value to the Period register (PER or CC0, depending on the Waveform Generation mode). If a new TOP value is written when the counter value is close to zero and counting down, the counter can be reloaded with the previous TOP value, due to synchronization delays. Then, the counter will count one extra cycle before the new TOP value is used.

COUNT and TOP are continuously compared, so when a new TOP value that is lower than current COUNT is written to TOP, COUNT will wrap before a compare match.

A counter wraparound can occur in any operation mode when up-counting without buffering, see the figure below.

Figure 26-7. Changing the Top value with Up-Counting Operation

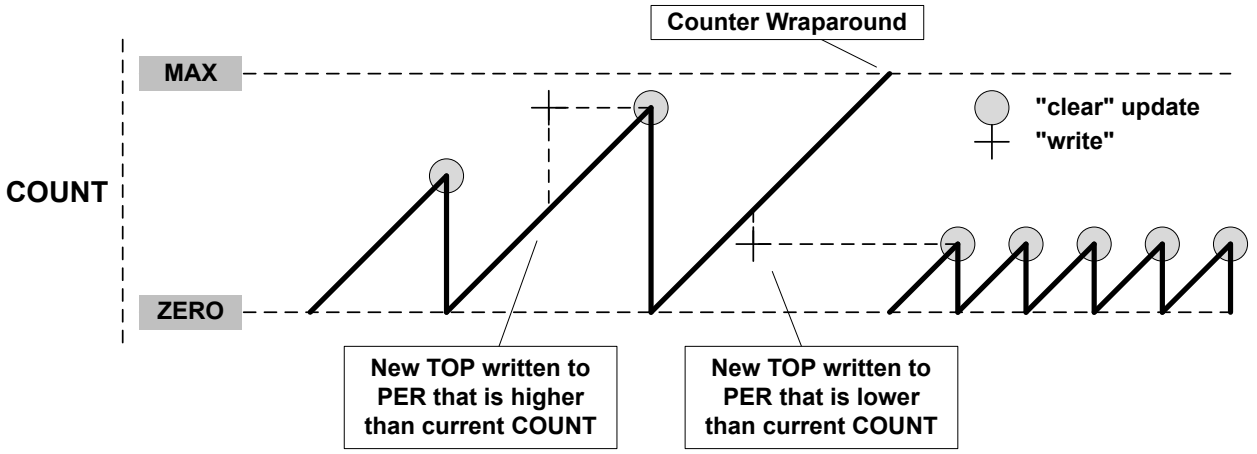

© 2025 Microchip Technology Inc. and its subsidiaries

Figure 26-8. Changing the Top Value with Down-Counting Operation

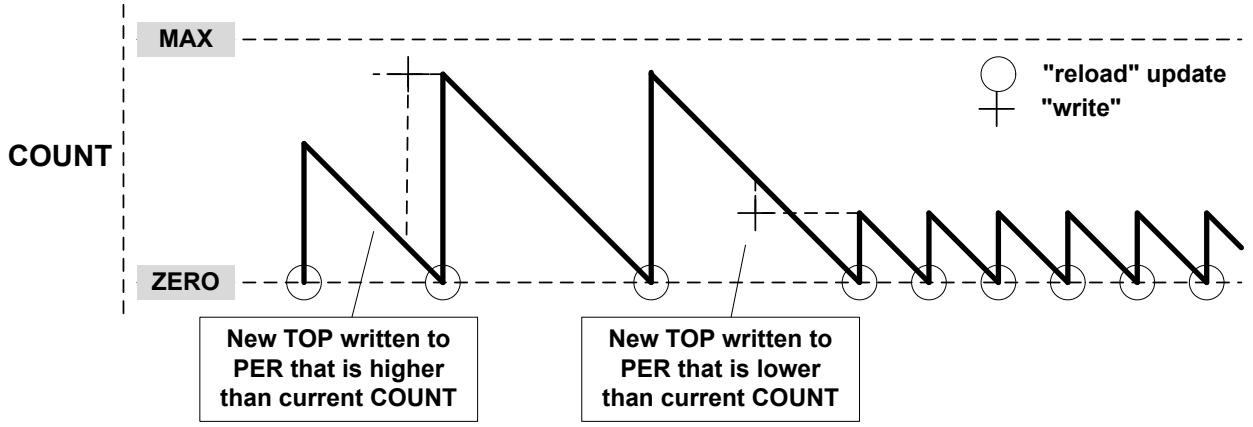

26.6.2.7. Capture Operations

To enable and use capture operations, the event line into the TC must be enabled using the TC Event Input bit in the Event Control register (EVCTRL.TCEI). The capture channels to be used must also be enabled in the Capture Channel x Enable bit group in the Control C register (CTRLC.CPTENx) before capture can be performed.

To enable and use capture operations, the corresponding Capture Channel x Enable bit in the Control C register (CTRLC.CAPTENx) must be written to '1'.

Note: The RETRIGGER, COUNT and START event actions are available only on an event from the Event System.

26.6.2.7.1. Event Capture Action on Events or I/Os

The compare and capture channels can be used as input capture channels to capture events from the Event System or I/O pins and give them a timestamp. This mode is selected when EVTCTRL.EVACT is configured either as OFF, RETRIGGER, COUNT or START. The following figure shows four capture events for one capture channel.

Figure 26-9. Input Capture Timing

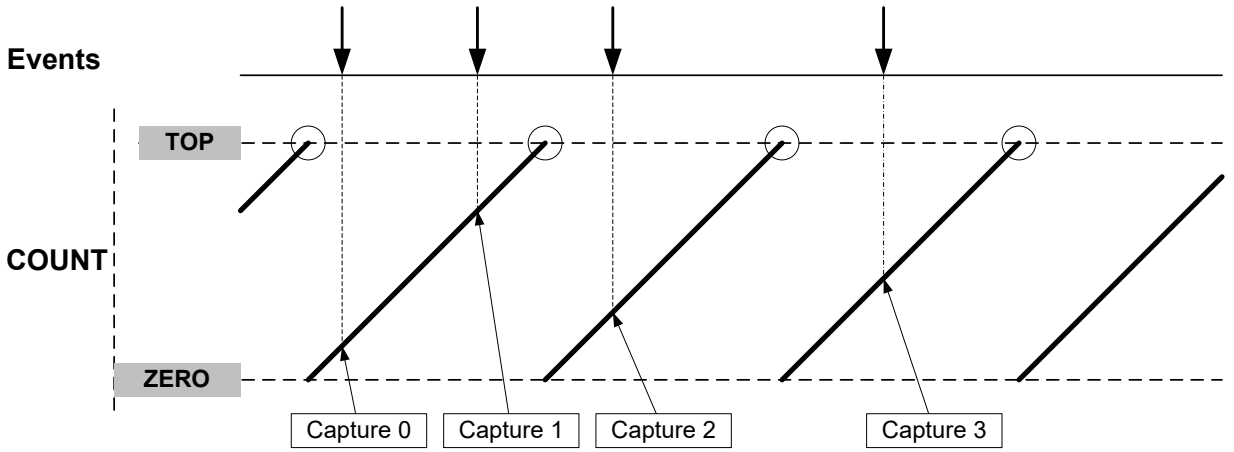

The TC can detect capture overflow of the input capture channels: When a new capture event is detected while the Capture Interrupt flag (INTFLAG.MCx) is still set, the new timestamp will not be stored and INTFLAG.ERR will be set.

© 2025 Microchip Technology Inc. and its subsidiaries

26.6.2.7.2. Period and Pulse-Width (PPW) Capture Action

The TC can perform two input captures and restart the counter on one of the edges. This enables the TC to measure the pulse width and period and to characterize the frequency *f* and duty cycle of an input signal:

$$f = \frac{1}{T} \qquad \text{dutyCycle} = \frac{t_p}{T}$$

Selecting PWP (pulse-width, period) in the Event Action bit group in the Event Control register (EVCTRL.EVACT) enables the TC to perform one capture action on the rising edge and the other one on the falling edge. The period *T* will be captured into CC1 and the pulse width t_p in CC0. EVCTRL.EVACT=PPW (period and pulse-width)offers identical functionality, but will capture *T* into CC0 and t_p into CC1.

The TC Event Input Invert Enable bit in the Event Control register (EVCTRL.TCINV) is used to select whether the wraparound should occur on the rising edge or the falling edge. If EVCTRL.TCINV=1, the wraparound will happen on the falling edge.

To fully characterize the frequency and duty cycle of the input signal, activate capture on CC0 and CC1 by writing 0x3 to the Capture Channel x Enable bit group in the Control C register (CTRLC.CPTEN). When only one of these measurements is required, the second channel can be used for other purposes.

The TC can detect capture overflow of the input capture channels: When a new capture event is detected while the Capture Interrupt flag (INTFLAG.MCx) is still set, the new timestamp will not be stored and INTFLAG.ERR will be set.

Figure 26-10. PWP Capture

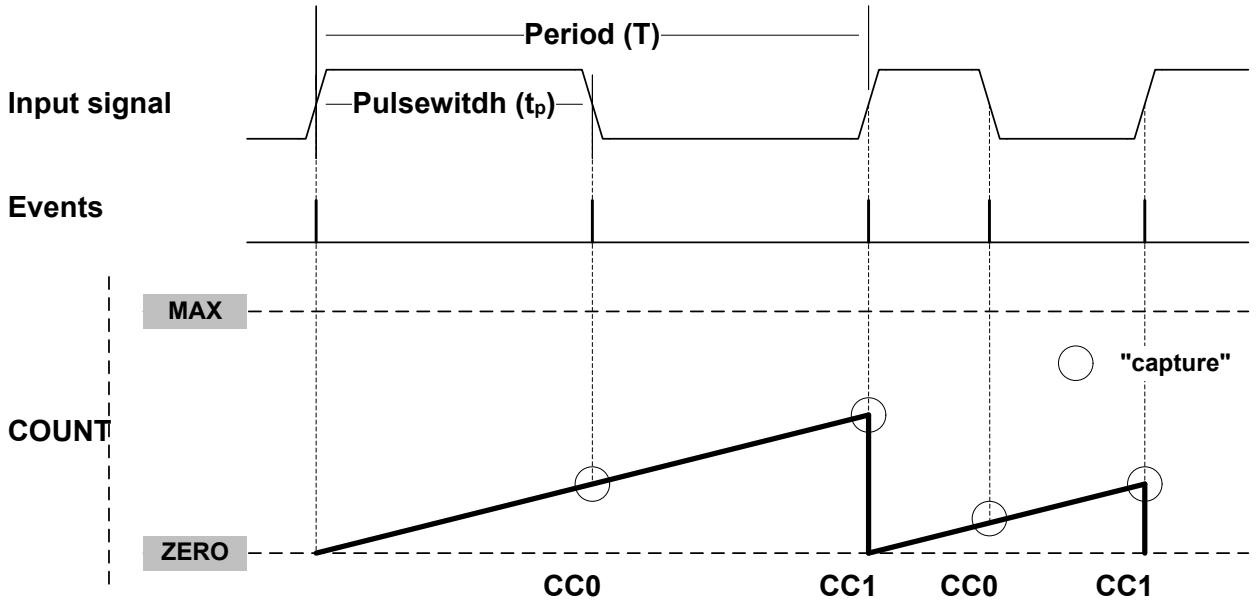

26.6.3. Additional Features

26.6.3.1. One-Shot Operation

When one-shot is enabled, the counter automatically stops on the next Counter Overflow or Underflow condition. When the counter is stopped, the Stop bit in the Status register (STATUS.STOP) is automatically set and the waveform outputs are set to zero.

© 2025 Microchip Technology Inc. and its subsidiaries

One-shot operation is enabled by writing a '1' to the One-Shot bit in the Control B Set register (CTRLBSET.ONESHOT), and disabled by writing a '1' to CTRLBCLR.ONESHOT. When enabled, the TC will count until an overflow or underflow occurs and stops counting operation. The one-shot operation can be restarted by a re-trigger software command, a re-trigger event, or a start event. When the counter restarts its operation, STATUS.STOP is automatically cleared.

26.6.4. Sleep Mode Operation

The TC can be configured to operate in any Sleep mode. To be able to run in standby, the RUNSTDBY bit in the Control A register (CTRLA.RUNSTDBY) must be written to one. The TC can wake-up the device using interrupts from any Sleep mode or perform actions through the Event System.

26.6.5. Synchronization

Due to asynchronicity between the main clock domain and the peripheral clock domains, some registers need to be synchronized when written or read.

The following bits are synchronized when written:

- Software Reset bit in the Control A register (CTRLA.SWRST)
- Enable bit in the Control A register (CTRLA.ENABLE)

Required write synchronization is denoted by the "Write-Synchronized" property in the register description.

The following registers are synchronized when written:

- Control B Clear register (CTRLBCLR)
- Control B Set register (CTRLBSET)
- Control C register (CTRLC)
- Count Value register (COUNT)
- Period Value register (PER)
- Compare/Capture Value registers (CCx)

Required write synchronization is denoted by the "Write-Synchronized" property in the register description.

The following registers are synchronized when read:

- Control B Clear register (CTRLBCLR)
- Control B Set register (CTRLBSET)
- Control C register (CTRLC)
- Count Value register (COUNT)
- Period Value register (PER)
- Compare/Capture Value registers (CCx)

Required read synchronization is denoted by the "Read-Synchronized" property in the register description.

© 2025 Microchip Technology Inc. and its subsidiaries

26.7. Register Summary for 8-bit Registers

Offset	Name	Bit Pos.	7	6	5	4	3	2	1	0
0x00	CTRLA	7:0		WAVEGEN[1:0]			MODE[1:0]		ENABLE	SWRST
		15:8			PRESCSYNC[1:0]		RUNSTDBY	PRESCALER[2:0]		
0x02	READREQ	7:0				ADDR[4:0]				
		15:8	RREQ	RCONT						
0x04	CTRLBCLR	7:0	CMD[1:0]					ONESHOT		DIR
0x05	CTRLBSET	7:0	CMD[1:0]					ONESHOT		DIR
0x06	CTRLC	7:0			CPTEN1	CPTEN0			INVEN1	INVEN0
0x07	Reserved									
0x08	DBGCTRL	7:0								DBGRUN
0x09	Reserved									
0x0A	EVCTRL	7:0			TCEI	TCINV		EVACT[2:0]		
		15:8			MCEO1	MCEO0				OVFEO
0x0C	INTENCLR	7:0			MC1	MC0	SYNCRDY		ERR	OVF
0x0D	INTENSET	7:0			MC1	MC0	SYNCRDY		ERR	OVF
0x0E	INTFLAG	7:0			MC1	MC0	SYNCRDY		ERR	OVF
0x0F	STATUS	7:0	SYNCBUSY			SLAVE	STOP			
0x10	COUNT	7:0	COUNT[7:0]							
0x11 ... 0x13	Reserved									
0x14	PER	7:0	PER[7:0]							
0x15 ... 0x17	Reserved									
0x18	CC0	7:0	CC[7:0]							
0x19	CC1	7:0	CC[7:0]							

© 2025 Microchip Technology Inc. and its subsidiaries

26.7.1. Control A

Name: CTRLA
Offset: 0x00
Reset: 0x00000000
Property: PAC Write-Protection, Write-Synchronized bits, Enable-Protected bits

Table 26-4. Register Bit Attribute Legend

Symbol	Description	Symbol	Description	Symbol	Description
R	Readable bit	**HC**	Cleared by Hardware	(Grey cell)	Unimplemented
W	Writable bit	**HS**	Set by Hardware	**X**	Bit is unknown at Reset
K	Write to clear	**S**	Software settable bit	—	—

Bit	15	14	13	12	11	10	9	8
			PRESCSYNC[1:0]		RUNSTDBY	PRESCALER[2:0]		
Access			R/W	R/W	R/W	R/W	R/W	R/W
Reset			0	0	0	0	0	0

Bit	7	6	5	4	3	2	1	0
		WAVEGEN[1:0]			MODE[1:0]		ENABLE	SWRST
Access		R/W	R/W		R/W	R/W	R/W	R/W
Reset		0	0		0	0	0	0

Bits 13:12 – PRESCSYNC[1:0] Prescaler and Counter Synchronization
These bits select whether the counter should wrap around on the next GCLK_TCx clock or the next prescaled GCLK_TCx clock. It also makes it possible to reset the prescaler.
These bits are not write-synchronized, but are enable-protected.

Value	Name	Description
0x0	GCLK	Reload or reset the counter on next generic clock
0x1	PRESC	Reload or reset the counter on next prescaler clock
0x2	RESYNC	Reload or reset the counter on next generic clock. Reset the prescaler counter
0x3	-	Reserved

Bit 11 – RUNSTDBY Run in Standby
This bit is used to keep the TC running in Standby mode.
This bit is not write-synchronized, but is enable-protected.

Value	Description
0	The TC is halted in standby.
1	The TC continues to run in standby.

Bits 10:8 – PRESCALER[2:0] Prescaler
These bits select the counter prescaler factor.
These bits are not write-synchronized, but are enable protected.

Value	Name	Description
0x0	DIV1	Prescaler: GCLK_TC
0x1	DIV2	Prescaler: GCLK_TC/2
0x2	DIV4	Prescaler: GCLK_TC/4
0x3	DIV8	Prescaler: GCLK_TC/8
0x4	DIV16	Prescaler: GCLK_TC/16
0x5	DIV64	Prescaler: GCLK_TC/64
0x6	DIV256	Prescaler: GCLK_TC/256
0x7	DIV1024	Prescaler: GCLK_TC/1024

© 2025 Microchip Technology Inc. and its subsidiaries

Bits 6:5 – WAVEGEN[1:0] Waveform Generation Operation

These bits select the waveform generation operation. They affect the top value, as shown in "Waveform Output Operations". It also controls whether frequency or PWM waveform generation should be used. How these modes differ can also be seen from "Waveform Output Operations". These bits are not write-synchronized, but are enable-protected.

Table 26-5. Waveform Generation Operation

Value	Name	Operation	Top Value	Waveform Output on Match	Waveform Output on Wraparound
0x0	NFRQ	Normal frequency	PER(1)/Max	Toggle	No action
0x1	MFRQ	Match frequency	CC0	Toggle	No action
0x2	NPWM	Normal PWM	PER(1)/Max	Clear when counting up Set when counting down	Set when counting up Clear when counting down
0x3	MPWM	Match PWM	CC0	Clear when counting up Set when counting down	Set when counting up Clear when counting down

Note:

1. This depends on the TC mode. In 8-bit mode, the top value is the Period Value register (PER). In 16-bit and 32-bit modes it is the maximum value.

Bits 3:2 – MODE[1:0] Timer Counter Mode

These bits select the Counter mode.
These bits are not write-synchronized, but are enable protected.

Value	Name	Description
0x0	COUNT16	Counter in 16-bit mode
0x1	COUNT8	Counter in 8-bit mode
0x2	COUNT32	Counter in 32-bit mode
0x3	-	Reserved

Bit 1 – ENABLE Enable

Due to synchronization, there is delay from writing CTRLA.ENABLE until the peripheral is enabled/disabled. The value written to CTRLA.ENABLE will read back immediately, and the ENABLE Synchronization Busy bit in the SYNCBUSY register (SYNCBUSY.ENABLE) will be set. SYNCBUSY.ENABLE will be cleared when the operation is complete.
This bit is not enable protected.

Value	Description
0	The peripheral is disabled.
1	The peripheral is enabled.

Bit 0 – SWRST Software Reset

Writing a '0' to this bit has no effect.
Writing a '1' to this bit resets all registers in the TC, except DBGCTRL, to their initial state, and the TC will be disabled.
Writing a '1' to CTRLA.SWRST will always take precedence; all other writes in the same write-operation will be discarded.
Due to synchronization there is a delay from writing CTRLA.SWRST until the reset is complete. CTRLA.SWRST and SYNCBUSY.SWRST will both be cleared when the reset is complete.
This bit is not enable protected.

Value	Description
0	There is no reset operation ongoing.

© 2025 Microchip Technology Inc. and its subsidiaries

Value	Description
1	The reset operation is ongoing.

© 2025 Microchip Technology Inc. and its subsidiaries

26.7.2. Read Request

Name: READREQ
Offset: 0x02
Reset: 0x0000

Table 26-6. Register Bit Attribute Legend

Symbol	Description	Symbol	Description	Symbol	Description
R	Readable bit	**HC**	Cleared by Hardware	(Grey cell)	Unimplemented
W	Writable bit	**HS**	Set by Hardware	**X**	Bit is unknown at Reset
K	Write to clear	**S**	Software settable bit	—	—

Bit	15	14	13	12	11	10	9	8
	RREQ	RCONT						
Access	W	R/W						
Reset	0	0						

Bit	7	6	5	4	3	2	1	0
				ADDR[4:0]				
Access				R/W	R/W	R/W	R/W	R/W
Reset				0	0	0	0	0

Bit 15 – RREQ Read Request
Writing a zero to this bit has no effect.
This bit will always read as zero.
Writing a one to this bit requests synchronization of the register pointed to by the Address bit group (READREQ. ADDR) and sets the Synchronization Busy bit in the Status register (STATUS.SYNCBUSY).

Bit 14 – RCONT Read Continuously
When continuous synchronization is enabled, the register pointed to by the Address bit group (READREQ.ADDR) will be synchronized automatically every time the register is updated. READREQ.RCONT prevents READREQ.RREQ from clearing automatically. For the continuous read mode, RREQ bit is required to be set once the RCONT bit is set.
Note: Once the continuous synchronization is enabled, the first write in the COUNT/CLOCK register will be stalled for a maximum of 6 APB + 6 TC clock cycles (the time for the on-going read synchronization to complete).

Value	Description
0	Continuous synchronization is disabled.
1	Continuous synchronization is enabled.

Bits 4:0 – ADDR[4:0] Address
These bits select the offset of the register that needs read synchronization. In the TC, only COUNT and CCx are available for read synchronization.

© 2025 Microchip Technology Inc. and its subsidiaries

26.7.3. Control B Clear

Name: CTRLBCLR
Offset: 0x04
Reset: 0x00
Property: PAC Write-Protection, Read-Synchronized, Write-Synchronized

This register allows the user to clear bits in the CTRLB register without doing a read-modify-write operation. Changes in this register will also be reflected in the Control B Set register (CTRLBSET).

Table 26-7. Register Bit Attribute Legend

Symbol	Description	Symbol	Description	Symbol	Description
R	Readable bit	**HC**	Cleared by Hardware	(Grey cell)	Unimplemented
W	Writable bit	**HS**	Set by Hardware	**X**	Bit is unknown at Reset
K	Write to clear	**S**	Software settable bit	—	—

Bit	7	6	5	4	3	2	1	0
	CMD[1:0]					ONESHOT		DIR
Access	R/W	R/W				R/W		R/W
Reset	0	0				0		0

Bits 7:6 – CMD[1:0] Command
These bits are used for software control of the TC. The commands are executed on the next prescaled GCLK_TC clock cycle. When a command has been executed, the CMD bit group will be read back as zero.
Writing 0x0 to these bits has no effect.
Writing a '1' to any of these bits will clear the pending command.

Table 26-8. Command

Value	Name	Description
0x0	NONE	No action
0x1	RETRIGGER	Force a start, restart or retrigger
0x2	STOP	Force a stop
0x3	-	Reserved

Bit 2 – ONESHOT One-Shot on Counter
This bit controls one-shot operation of the TC.
Writing a '0' to this bit has no effect
Writing a '1' to this bit will disable one-shot operation.

Value	Description
0	The TC will wrap around and continue counting on an Overflow/Underflow condition.
1	The TC will wrap around and stop on the next Underflow/Overflow condition.

Bit 0 – DIR Counter Direction
This bit is used to change the direction of the counter.
Writing a '0' to this bit has no effect.
Writing a '1' to this bit will clear the bit and make the counter count up.

Value	Description
0	The timer/counter is counting up (incrementing).
1	The timer/counter is counting down (decrementing).

© 2025 Microchip Technology Inc. and its subsidiaries

26.7.4. Control B Set

Name: CTRLBSET
Offset: 0x05
Reset: 0x00
Property: PAC Write-Protection, Read-synchronized, Write-Synchronized

This register allows the user to set bits in the CTRLB register without doing a read-modify-write operation. Changes in this register will also be reflected in the Control B Clear register (CTRLBCLR).

Table 26-9. Register Bit Attribute Legend

Symbol	Description	Symbol	Description	Symbol	Description
R	Readable bit	**HC**	Cleared by Hardware	(Grey cell)	Unimplemented
W	Writable bit	**HS**	Set by Hardware	**X**	Bit is unknown at Reset
K	Write to clear	**S**	Software settable bit	—	—

Bit	7	6	5	4	3	2	1	0
	CMD[1:0]					ONESHOT		DIR
Access	R/W	R/W				R/W		R/W
Reset	0	0				0		0

Bits 7:6 – CMD[1:0] Command
These bits are used for software control of the TC. The commands are executed on the next prescaled GCLK_TC clock cycle. When a command has been executed, the CMD bit group will be read back as zero.
Writing 0x0 to these bits has no effect.
Writing a '1' to one of these bits will set a command.

Table 26-10. Command

Value	Name	Description
0x0	NONE	No action
0x1	RETRIGGER	Force a start, restart or retrigger
0x2	STOP	Force a stop
0x3	-	Reserved

Bit 2 – ONESHOT One-Shot on Counter
This bit controls one-shot operation of the TC.
Writing a '0' to this bit has no effect
Writing a '1' to this bit will enable one-shot operation.

Value	Description
0	The TC will wrap around and continue counting on an Overflow/Underflow condition.
1	The TC will wrap around and stop on the next Underflow/Overflow condition.

Bit 0 – DIR Counter Direction
This bit is used to change the direction of the counter.
Writing a '0' to this bit has no effect.
Writing a '1' to this bit will make the counter count down.

Value	Description
0	The timer/counter is counting up (incrementing).
1	The timer/counter is counting down (decrementing).

© 2025 Microchip Technology Inc. and its subsidiaries

26.7.5. Control C

Name: CTRLC
Offset: 0x06
Reset: 0x00
Property: PAC Write-Protection, Read-synchronized, Write-Synchronized

Table 26-11. Register Bit Attribute Legend

Symbol	Description	Symbol	Description	Symbol	Description
R	Readable bit	**HC**	Cleared by Hardware	(Grey cell)	Unimplemented
W	Writable bit	**HS**	Set by Hardware	**X**	Bit is unknown at Reset
K	Write to clear	**S**	Software settable bit	—	—

Bit	7	6	5	4	3	2	1	0
			CPTEN1	CPTEN0			INVEN1	INVEN0
Access			R/W	R/W			R/W	R/W
Reset			0	0			0	0

Bits 4, 5 – CPTENx Capture Channel x Enable
These bits are used to select the capture or compare operation on channel x.
Writing a '1' to CPTENx enables capture on channel x.
Writing a '0' to CPTENx disables capture on channel x.

Bits 0, 1 – INVENx Waveform Output x Inversion Enable
These bits are used to select inversion on the output of channel x.
Writing a '1' to INVENx inverts output from WO[x].
Writing a '0' to INVENx disables inversion of output from WO[x].

© 2025 Microchip Technology Inc. and its subsidiaries

26.7.6. Debug Control

Name: DBGCTRL
Offset: 0x08
Reset: 0x00
Property: PAC Write-Protection

Table 26-12. Register Bit Attribute Legend

Symbol	Description	Symbol	Description	Symbol	Description
R	Readable bit	**HC**	Cleared by Hardware	(Grey cell)	Unimplemented
W	Writable bit	**HS**	Set by Hardware	**X**	Bit is unknown at Reset
K	Write to clear	**S**	Software settable bit	—	—

Bit	7	6	5	4	3	2	1	0
								DBGRUN
Access								R/W
Reset								0

Bit 0 – DBGRUN Debug Run Mode
This bit is not affected by a software Reset, and should not be changed by software while the TC is enabled.

Value	Description
0	The TC is halted when the device is halted in Debug mode.
1	The TC continues normal operation when the device is halted in Debug mode.

© 2025 Microchip Technology Inc. and its subsidiaries

26.7.7. Event Control

Name: EVCTRL
Offset: 0x0A
Reset: 0x0000
Property: PAC Write-Protection, Enable-Protected

Table 26-13. Register Bit Attribute Legend

Symbol	Description	Symbol	Description	Symbol	Description
R	Readable bit	**HC**	Cleared by Hardware	(Grey cell)	Unimplemented
W	Writable bit	**HS**	Set by Hardware	**X**	Bit is unknown at Reset
K	Write to clear	**S**	Software settable bit	—	—

Bit	15	14	13	12	11	10	9	8
			MCEO1	MCEO0				OVFEO
Access			R/W	R/W				R/W
Reset			0	0				0

Bit	7	6	5	4	3	2	1	0
			TCEI	TCINV		EVACT[2:0]		
Access			R/W	R/W		R/W	R/W	R/W
Reset			0	0		0	0	0

Bits 12, 13 – MCEOx Match or Capture Channel x Event Output Enable [x = 1..0]
These bits enable the generation of an event for every match or capture on channel x.

Value	Description
0	Match/Capture event on channel x is disabled and will not be generated.
1	Match/Capture event on channel x is enabled and will be generated for every compare/capture.

Bit 8 – OVFEO Overflow/Underflow Event Output Enable
This bit enables the Overflow/Underflow event. When enabled, an event will be generated when the counter overflows/underflows.

Value	Description
0	Overflow/Underflow event is disabled and will not be generated.
1	Overflow/Underflow event is enabled and will be generated for every counter overflow/underflow.

Bit 5 – TCEI TC Event Enable
This bit is used to enable asynchronous input events to the TC.

Value	Description
0	Incoming events are disabled.
1	Incoming events are enabled.

Bit 4 – TCINV TC Inverted Event Input Polarity
This bit inverts the asynchronous input event source.

Value	Description
0	Input event source is not inverted.
1	Input event source is inverted.

Bits 2:0 – EVACT[2:0] Event Action
These bits define the event action the TC will perform on an event.

© 2025 Microchip Technology Inc. and its subsidiaries

Value	Name	Description
0x0	OFF	Event action disabled
0x1	RETRIGGER	Start, restart or retrigger TC on event
0x2	COUNT	Count on event
0x3	START	Start TC on event
0x4		
0x5	PPW	Period captured in CC0, pulse width in CC1
0x6	PWP	Period captured in CC1, pulse width in CC0
0x7		

© 2025 Microchip Technology Inc. and its subsidiaries

26.7.8. Interrupt Enable Clear

Name: INTENCLR
Offset: 0x0C
Reset: 0x00
Property: PAC Write-Protection

This register allows the user to disable an interrupt without doing a read-modify-write operation. Changes in this register will also be reflected in the Interrupt Enable Set register (INTENSET).

Table 26-14. Register Bit Attribute Legend

Symbol	Description	Symbol	Description	Symbol	Description
R	Readable bit	**HC**	Cleared by Hardware	(Grey cell)	Unimplemented
W	Writable bit	**HS**	Set by Hardware	**X**	Bit is unknown at Reset
K	Write to clear	**S**	Software settable bit	—	—

Bit	7	6	5	4	3	2	1	0
			MC1	MC0	SYNCRDY		ERR	OVF
Access			R/W	R/W	R/W		R/W	R/W
Reset			0	0	0		0	0

Bits 4, 5 – MCx Match or Capture Channel x Interrupt Enable [x = 1..0]
Writing a '0' to these bits has no effect.
Writing a '1' to MCx will clear the corresponding Match or Capture Channel x Interrupt Enable bit, which disables the Match or Capture Channel x interrupt.

Value	Description
0	The Match or Capture Channel x interrupt is disabled.
1	The Match or Capture Channel x interrupt is enabled.

Bit 3 – SYNCRDY Synchronization Ready Interrupt Enable
Writing a '0' to this bit has no effect.
Writing a one to this bit will clear the Synchronization Ready Interrupt Disable/Enable bit, which disables the Synchronization Ready interrupt.

Value	Description
0	The Synchronization Ready interrupt is disabled.
1	The Synchronization Ready interrupt is enabled.

Bit 1 – ERR Error Interrupt Enable
Writing a '0' to this bit has no effect.
Writing a '1' to this bit will clear the Error Interrupt Enable bit, which disables the Error interrupt.

Value	Description
0	The Error interrupt is disabled.
1	The Error interrupt is enabled.

Bit 0 – OVF Overflow Interrupt Enable
Writing a '0' to this bit has no effect.
Writing a '1' to this bit will clear the Overflow Interrupt Enable bit, which disables the Overflow interrupt request.

Value	Description
0	The Overflow interrupt is disabled.
1	The Overflow interrupt is enabled.

© 2025 Microchip Technology Inc. and its subsidiaries

26.7.9. Interrupt Enable Set

Name: INTENSET
Offset: 0x0D
Reset: 0x00
Property: PAC Write-Protection

This register allows the user to enable an interrupt without doing a read-modify-write operation. Changes in this register will also be reflected in the Interrupt Enable Clear register (INTENCLR).

Table 26-15. Register Bit Attribute Legend

Symbol	Description	Symbol	Description	Symbol	Description
R	Readable bit	**HC**	Cleared by Hardware	(Grey cell)	Unimplemented
W	Writable bit	**HS**	Set by Hardware	**X**	Bit is unknown at Reset
K	Write to clear	**S**	Software settable bit	—	—

Bit	7	6	5	4	3	2	1	0
			MC1	MC0	SYNCRDY		ERR	OVF
Access			R/W	R/W	R/W		R/W	R/W
Reset			0	0	0		0	0

Bits 4, 5 – MCx Match or Capture Channel x Interrupt Enable [x = 1..0]
Writing a '0' to these bits has no effect.
Writing a '1' to MCx will set the corresponding Match or Capture Channel x Interrupt Enable bit, which enables the Match or Capture Channel x interrupt.

Value	Description
0	The Match or Capture Channel x interrupt is disabled.
1	The Match or Capture Channel x interrupt is enabled.

Bit 3 – SYNCRDY Synchronization Ready Interrupt Enable
Writing a '0' to this bit has no effect.
Writing a one to this bit will set the Synchronization Ready Interrupt Disable/Enable bit, which enables the Synchronization Ready interrupt.

Value	Description
0	The Synchronization Ready interrupt is disabled.
1	The Synchronization Ready interrupt is enabled.

Bit 1 – ERR Error Interrupt Enable
Writing a '0' to this bit has no effect.
Writing a '1' to this bit will set the Error Interrupt Enable bit, which enables the Error interrupt.

Value	Description
0	The Error interrupt is disabled.
1	The Error interrupt is enabled.

Bit 0 – OVF Overflow Interrupt Enable
Writing a '0' to this bit has no effect.
Writing a '1' to this bit will set the Overflow Interrupt Enable bit, which enables the Overflow interrupt request.

Value	Description
0	The Overflow interrupt is disabled.
1	The Overflow interrupt is enabled.

© 2025 Microchip Technology Inc. and its subsidiaries

26.7.10. Interrupt Flag Status and Clear

Name: INTFLAG
Offset: 0x0E
Reset: 0x00
Property: -

Table 26-16. Register Bit Attribute Legend

Symbol	Description	Symbol	Description	Symbol	Description
R	Readable bit	**HC**	Cleared by Hardware	(Grey cell)	Unimplemented
W	Writable bit	**HS**	Set by Hardware	**X**	Bit is unknown at Reset
K	Write to clear	**S**	Software settable bit	—	—

Bit	7	6	5	4	3	2	1	0
			MC1	MC0	SYNCRDY		ERR	OVF
Access			R/W	R/W	R/W		R/W	R/W
Reset			0	0	0		0	0

Bits 4, 5 – MCx Match or Capture Channel x [x = 1..0]
This flag is set on a comparison match, or when the corresponding CCx register contains a valid capture value. This flag is set on the next CLK_TC_CNT cycle, and will generate an interrupt request if the corresponding Match or Capture Channel x Interrupt Enable bit in the Interrupt Enable Set register (INTENSET.MCx) is '1'.
Writing a '0' to one of these bits has no effect.
Writing a '1' to one of these bits will clear the corresponding Match or Capture Channel x Interrupt flag
In capture operation, this flag is automatically cleared when CCx register is read.

Bit 3 – SYNCRDY Synchronization Ready Interrupt Enable
Writing a '0' to this bit has no effect.
Writing a one to this bit will clear the Synchronization Ready Interrupt Disable/Enable bit, which disables the Synchronization Ready interrupt.

Value	Description
0	The Synchronization Ready interrupt is disabled.
1	The Synchronization Ready interrupt is enabled.

Bit 1 – ERR Error Interrupt Flag
This flag is set when a new capture occurs on a channel while the corresponding Match or Capture Channel x Interrupt flag is set, in which case there is nowhere to store the new capture.
Writing a '0' to this bit has no effect.
Writing a '1' to this bit clears the Error Interrupt flag.

Bit 0 – OVF Overflow Interrupt Flag
This flag is set on the next CLK_TC_CNT cycle after an Overflow condition occurs, and will generate an interrupt request if INTENCLR.OVF or INTENSET.OVF is '1'.
Writing a '0' to this bit has no effect.
Writing a '1' to this bit clears the Overflow Interrupt flag.

© 2025 Microchip Technology Inc. and its subsidiaries

26.7.11. Status

Name: STATUS
Offset: 0x0F
Reset: 0x08
Property: -

Table 26-17. Register Bit Attribute Legend

Symbol	Description	Symbol	Description	Symbol	Description
R	Readable bit	**HC**	Cleared by Hardware	(Grey cell)	Unimplemented
W	Writable bit	**HS**	Set by Hardware	**X**	Bit is unknown at Reset
K	Write to clear	**S**	Software settable bit	—	—

Bit	7	6	5	4	3	2	1	0
	SYNCBUSY			SLAVE	STOP			
Access	R			R	R			
Reset	0			0	1			

Bit 7 – SYNCBUSY Synchronization Busy
This bit is cleared when the synchronization of registers between the clock domains is complete.
This bit is set when the synchronization of registers between clock domains is started.

Bit 4 – SLAVE Client Status Flag
This bit is only available in 32-bit mode on the Client TC. The bit is set when the associated Host TC is set to run in 32-bit mode.

Bit 3 – STOP Stop Status Flag
This bit is set when the TC is disabled, on a Stop command, or on an overflow/underflow condition when the One-Shot bit in the Control B Set register (CTRLBSET.ONESHOT) is '1'.

Value	Description
0	Counter is running.
1	Counter is stopped.

© 2025 Microchip Technology Inc. and its subsidiaries

26.7.12. Counter Value, 8-bit Mode

Name: COUNT
Offset: 0x10
Reset: 0x00
Property: PAC Write-Protection, Write-Synchronized

Table 26-18. Register Bit Attribute Legend

Symbol	Description	Symbol	Description	Symbol	Description
R	Readable bit	**HC**	Cleared by Hardware	(Grey cell)	Unimplemented
W	Writable bit	**HS**	Set by Hardware	**X**	Bit is unknown at Reset
K	Write to clear	**S**	Software settable bit	—	—

Bit	7	6	5	4	3	2	1	0
	COUNT[7:0]							
Access	R/W	R/W	R/W	R/W	R/W	R/W	R/W	R/W
Reset	0	0	0	0	0	0	0	0

Bits 7:0 – COUNT[7:0] Counter Value
These bits contain the current counter value.
Note: Prior to any read access, this register must be synchronized by the user by writing CTRLA.COUNTSYNC = 1.

© 2025 Microchip Technology Inc. and its subsidiaries

26.7.13. Period Value, 8-bit Mode

Name: PER
Offset: 0x14
Reset: 0xFF
Property: Write-Synchronized

Table 26-19. Register Bit Attribute Legend

Symbol	Description	Symbol	Description	Symbol	Description
R	Readable bit	**HC**	Cleared by Hardware	(Grey cell)	Unimplemented
W	Writable bit	**HS**	Set by Hardware	**X**	Bit is unknown at Reset
K	Write to clear	**S**	Software settable bit	—	—

Bit	7	6	5	4	3	2	1	0
	PER[7:0]							
Access	R/W	R/W	R/W	R/W	R/W	R/W	R/W	R/W
Reset	0	0	0	0	0	0	0	1

Bits 7:0 – PER[7:0] Period Value
These bits hold the value of the Period Buffer register PERBUF. The value is copied to PER register on UPDATE condition.

© 2025 Microchip Technology Inc. and its subsidiaries

26.7.14. Channel x Compare/Capture Value, 8-bit Mode

Name: CCx
Offset: 0x18 + x*0x01 [x=0..1]
Reset: 0x00
Property: Write-Synchronized

Table 26-20. Register Bit Attribute Legend

Symbol	Description	Symbol	Description	Symbol	Description
R	Readable bit	**HC**	Cleared by Hardware	(Grey cell)	Unimplemented
W	Writable bit	**HS**	Set by Hardware	**X**	Bit is unknown at Reset
K	Write to clear	**S**	Software settable bit	—	—

Bit	7	6	5	4	3	2	1	0
	CC[7:0]							
Access	R/W	R/W	R/W	R/W	R/W	R/W	R/W	R/W
Reset	0	0	0	0	0	0	0	0

Bits 7:0 – CC[7:0] Channel x Compare/Capture Value
These bits contain the compare/capture value in 8-bit TC mode. In Match frequency (MFRQ) or Match PWM (MPWM) waveform operation (CTRLA.WAVEGEN), the CC0 register is used as a period register.

© 2025 Microchip Technology Inc. and its subsidiaries

26.8. Register Summary for 16-bit Registers

Offset	Name	Bit Pos.	7	6	5	4	3	2	1	0
0x00	CTRLA	7:0		WAVEGEN[1:0]			MODE[1:0]		ENABLE	SWRST
		15:8			PRESCSYNC[1:0]		RUNSTDBY	PRESCALER[2:0]		
0x02	READREQ	7:0				ADDR[4:0]				
		15:8	RREQ	RCONT						
0x04	CTRLBCLR	7:0	CMD[1:0]					ONESHOT		DIR
0x05	CTRLBSET	7:0	CMD[1:0]					ONESHOT		DIR
0x06	CTRLC	7:0			CPTEN1	CPTEN0			INVEN1	INVEN0
0x07	Reserved									
0x08	DBGCTRL	7:0								DBGRUN
0x09	Reserved									
0x0A	EVCTRL	7:0			TCEI	TCINV		EVACT[2:0]		
		15:8			MCEO1	MCEO0				OVFEO
0x0C	INTENCLR	7:0			MC1	MC0	SYNCRDY		ERR	OVF
0x0D	INTENSET	7:0			MC1	MC0	SYNCRDY		ERR	OVF
0x0E	INTFLAG	7:0			MC1	MC0	SYNCRDY		ERR	OVF
0x0F	STATUS	7:0	SYNCBUSY			SLAVE	STOP			
0x10	COUNT	7:0	COUNT[7:0]							
		15:8	COUNT[15:8]							
0x12 ... 0x17	Reserved									
0x18	CC0	7:0	CC[7:0]							
		15:8	CC[15:8]							
0x1A	CC1	7:0	CC[7:0]							
		15:8	CC[15:8]							

© 2025 Microchip Technology Inc. and its subsidiaries

26.8.1. Control A

Name: CTRLA
Offset: 0x00
Reset: 0x00000000
Property: PAC Write-Protection, Write-Synchronized bits, Enable-Protected bits

Table 26-21. Register Bit Attribute Legend

Symbol	Description	Symbol	Description	Symbol	Description
R	Readable bit	**HC**	Cleared by Hardware	(Grey cell)	Unimplemented
W	Writable bit	**HS**	Set by Hardware	**X**	Bit is unknown at Reset
K	Write to clear	**S**	Software settable bit	—	—

Bit	15	14	13	12	11	10	9	8
			PRESCSYNC[1:0]		RUNSTDBY	PRESCALER[2:0]		
Access			R/W	R/W	R/W	R/W	R/W	R/W
Reset			0	0	0	0	0	0

Bit	7	6	5	4	3	2	1	0
		WAVEGEN[1:0]			MODE[1:0]		ENABLE	SWRST
Access		R/W	R/W		R/W	R/W	R/W	R/W
Reset		0	0		0	0	0	0

Bits 13:12 – PRESCSYNC[1:0] Prescaler and Counter Synchronization
These bits select whether the counter should wrap around on the next GCLK_TCx clock or the next prescaled GCLK_TCx clock. It also makes it possible to reset the prescaler.
These bits are not write-synchronized, but are enable-protected.

Value	Name	Description
0x0	GCLK	Reload or reset the counter on next generic clock
0x1	PRESC	Reload or reset the counter on next prescaler clock
0x2	RESYNC	Reload or reset the counter on next generic clock. Reset the prescaler counter
0x3	-	Reserved

Bit 11 – RUNSTDBY Run in Standby
This bit is used to keep the TC running in Standby mode.
This bit is not write-synchronized, but is enable-protected.

Value	Description
0	The TC is halted in standby.
1	The TC continues to run in standby.

Bits 10:8 – PRESCALER[2:0] Prescaler
These bits select the counter prescaler factor.
These bits are not write-synchronized, but are enable protected.

Value	Name	Description
0x0	DIV1	Prescaler: GCLK_TC
0x1	DIV2	Prescaler: GCLK_TC/2
0x2	DIV4	Prescaler: GCLK_TC/4
0x3	DIV8	Prescaler: GCLK_TC/8
0x4	DIV16	Prescaler: GCLK_TC/16
0x5	DIV64	Prescaler: GCLK_TC/64
0x6	DIV256	Prescaler: GCLK_TC/256
0x7	DIV1024	Prescaler: GCLK_TC/1024

© 2025 Microchip Technology Inc. and its subsidiaries

Bits 6:5 – WAVEGEN[1:0] Waveform Generation Operation

These bits select the waveform generation operation. They affect the top value, as shown in "Waveform Output Operations". It also controls whether frequency or PWM waveform generation should be used. How these modes differ can also be seen from "Waveform Output Operations". These bits are not write-synchronized, but are enable-protected.

Table 26-22. Waveform Generation Operation

Value	Name	Operation	Top Value	Waveform Output on Match	Waveform Output on Wraparound
0x0	NFRQ	Normal frequency	PER(1)/Max	Toggle	No action
0x1	MFRQ	Match frequency	CC0	Toggle	No action
0x2	NPWM	Normal PWM	PER(1)/Max	Clear when counting up Set when counting down	Set when counting up Clear when counting down
0x3	MPWM	Match PWM	CC0	Clear when counting up Set when counting down	Set when counting up Clear when counting down

Note:

1. This depends on the TC mode. In 8-bit mode, the top value is the Period Value register (PER). In 16-bit and 32-bit modes it is the maximum value.

Bits 3:2 – MODE[1:0] Timer Counter Mode

These bits select the Counter mode.
These bits are not write-synchronized, but are enable protected.

Value	Name	Description
0x0	COUNT16	Counter in 16-bit mode
0x1	COUNT8	Counter in 8-bit mode
0x2	COUNT32	Counter in 32-bit mode
0x3	-	Reserved

Bit 1 – ENABLE Enable

Due to synchronization, there is delay from writing CTRLA.ENABLE until the peripheral is enabled/disabled. The value written to CTRLA.ENABLE will read back immediately, and the ENABLE Synchronization Busy bit in the SYNCBUSY register (SYNCBUSY.ENABLE) will be set. SYNCBUSY.ENABLE will be cleared when the operation is complete.
This bit is not enable protected.

Value	Description
0	The peripheral is disabled.
1	The peripheral is enabled.

Bit 0 – SWRST Software Reset

Writing a '0' to this bit has no effect.
Writing a '1' to this bit resets all registers in the TC, except DBGCTRL, to their initial state, and the TC will be disabled.
Writing a '1' to CTRLA.SWRST will always take precedence; all other writes in the same write-operation will be discarded.
Due to synchronization there is a delay from writing CTRLA.SWRST until the reset is complete. CTRLA.SWRST and SYNCBUSY.SWRST will both be cleared when the reset is complete.
This bit is not enable protected.

Value	Description
0	There is no reset operation ongoing.

© 2025 Microchip Technology Inc. and its subsidiaries

Value	Description
1	The reset operation is ongoing.

© 2025 Microchip Technology Inc. and its subsidiaries

26.8.2. Read Request

Name: READREQ
Offset: 0x02
Reset: 0x0000

Table 26-23. Register Bit Attribute Legend

Symbol	Description	Symbol	Description	Symbol	Description
R	Readable bit	**HC**	Cleared by Hardware	(Grey cell)	Unimplemented
W	Writable bit	**HS**	Set by Hardware	**X**	Bit is unknown at Reset
K	Write to clear	**S**	Software settable bit	—	—

Bit	15	14	13	12	11	10	9	8
	RREQ	RCONT						
Access	W	R/W						
Reset	0	0						

Bit	7	6	5	4	3	2	1	0
				ADDR[4:0]				
Access				R/W	R/W	R/W	R/W	R/W
Reset				0	0	0	0	0

Bit 15 – RREQ Read Request
Writing a zero to this bit has no effect.
This bit will always read as zero.
Writing a one to this bit requests synchronization of the register pointed to by the Address bit group (READREQ. ADDR) and sets the Synchronization Busy bit in the Status register (STATUS.SYNCBUSY).

Bit 14 – RCONT Read Continuously
When continuous synchronization is enabled, the register pointed to by the Address bit group (READREQ.ADDR) will be synchronized automatically every time the register is updated. READREQ.RCONT prevents READREQ.RREQ from clearing automatically. For the continuous read mode, RREQ bit is required to be set once the RCONT bit is set.
Note: Once the continuous synchronization is enabled, the first write in the COUNT/CLOCK register will be stalled for a maximum of 6 APB + 6 TC clock cycles (the time for the on-going read synchronization to complete).

Value	Description
0	Continuous synchronization is disabled.
1	Continuous synchronization is enabled.

Bits 4:0 – ADDR[4:0] Address
These bits select the offset of the register that needs read synchronization. In the TC, only COUNT and CCx are available for read synchronization.

© 2025 Microchip Technology Inc. and its subsidiaries

26.8.3. Control B Clear

Name: CTRLBCLR
Offset: 0x04
Reset: 0x00
Property: PAC Write-Protection, Read-Synchronized, Write-Synchronized

This register allows the user to clear bits in the CTRLB register without doing a read-modify-write operation. Changes in this register will also be reflected in the Control B Set register (CTRLBSET).

Table 26-24. Register Bit Attribute Legend

Symbol	Description	Symbol	Description	Symbol	Description
R	Readable bit	**HC**	Cleared by Hardware	(Grey cell)	Unimplemented
W	Writable bit	**HS**	Set by Hardware	**X**	Bit is unknown at Reset
K	Write to clear	**S**	Software settable bit	—	—

Bit	7	6	5	4	3	2	1	0
	CMD[1:0]					ONESHOT		DIR
Access	R/W	R/W				R/W		R/W
Reset	0	0				0		0

Bits 7:6 – CMD[1:0] Command
These bits are used for software control of the TC. The commands are executed on the next prescaled GCLK_TC clock cycle. When a command has been executed, the CMD bit group will be read back as zero.
Writing 0x0 to these bits has no effect.
Writing a '1' to any of these bits will clear the pending command.

Table 26-25. Command

Value	Name	Description
0x0	NONE	No action
0x1	RETRIGGER	Force a start, restart or retrigger
0x2	STOP	Force a stop
0x3	-	Reserved

Bit 2 – ONESHOT One-Shot on Counter
This bit controls one-shot operation of the TC.
Writing a '0' to this bit has no effect
Writing a '1' to this bit will disable one-shot operation.

Value	Description
0	The TC will wrap around and continue counting on an Overflow/Underflow condition.
1	The TC will wrap around and stop on the next Underflow/Overflow condition.

Bit 0 – DIR Counter Direction
This bit is used to change the direction of the counter.
Writing a '0' to this bit has no effect.
Writing a '1' to this bit will clear the bit and make the counter count up.

Value	Description
0	The timer/counter is counting up (incrementing).
1	The timer/counter is counting down (decrementing).

© 2025 Microchip Technology Inc. and its subsidiaries

26.8.4. Control B Set

Name: CTRLBSET
Offset: 0x05
Reset: 0x00
Property: PAC Write-Protection, Read-synchronized, Write-Synchronized

This register allows the user to set bits in the CTRLB register without doing a read-modify-write operation. Changes in this register will also be reflected in the Control B Clear register (CTRLBCLR).

Table 26-26. Register Bit Attribute Legend

Symbol	Description	Symbol	Description	Symbol	Description
R	Readable bit	**HC**	Cleared by Hardware	(Grey cell)	Unimplemented
W	Writable bit	**HS**	Set by Hardware	**X**	Bit is unknown at Reset
K	Write to clear	**S**	Software settable bit	—	—

Bit	7	6	5	4	3	2	1	0
	CMD[1:0]					ONESHOT		DIR
Access	R/W	R/W				R/W		R/W
Reset	0	0				0		0

Bits 7:6 – CMD[1:0] Command
These bits are used for software control of the TC. The commands are executed on the next prescaled GCLK_TC clock cycle. When a command has been executed, the CMD bit group will be read back as zero.
Writing 0x0 to these bits has no effect.
Writing a '1' to one of these bits will set a command.

Table 26-27. Command

Value	Name	Description
0x0	NONE	No action
0x1	RETRIGGER	Force a start, restart or retrigger
0x2	STOP	Force a stop
0x3	-	Reserved

Bit 2 – ONESHOT One-Shot on Counter
This bit controls one-shot operation of the TC.
Writing a '0' to this bit has no effect
Writing a '1' to this bit will enable one-shot operation.

Value	Description
0	The TC will wrap around and continue counting on an Overflow/Underflow condition.
1	The TC will wrap around and stop on the next Underflow/Overflow condition.

Bit 0 – DIR Counter Direction
This bit is used to change the direction of the counter.
Writing a '0' to this bit has no effect.
Writing a '1' to this bit will make the counter count down.

Value	Description
0	The timer/counter is counting up (incrementing).
1	The timer/counter is counting down (decrementing).

© 2025 Microchip Technology Inc. and its subsidiaries

26.8.5. Control C

Name: CTRLC
Offset: 0x06
Reset: 0x00
Property: PAC Write-Protection, Read-synchronized, Write-Synchronized

Table 26-28. Register Bit Attribute Legend

Symbol	Description	Symbol	Description	Symbol	Description
R	Readable bit	**HC**	Cleared by Hardware	(Grey cell)	Unimplemented
W	Writable bit	**HS**	Set by Hardware	**X**	Bit is unknown at Reset
K	Write to clear	**S**	Software settable bit	—	—

Bit	7	6	5	4	3	2	1	0
			CPTEN1	CPTEN0			INVEN1	INVEN0
Access			R/W	R/W			R/W	R/W
Reset			0	0			0	0

Bits 4, 5 – CPTENx Capture Channel x Enable
These bits are used to select the capture or compare operation on channel x.
Writing a '1' to CPTENx enables capture on channel x.
Writing a '0' to CPTENx disables capture on channel x.

Bits 0, 1 – INVENx Waveform Output x Inversion Enable
These bits are used to select inversion on the output of channel x.
Writing a '1' to INVENx inverts output from WO[x].
Writing a '0' to INVENx disables inversion of output from WO[x].

© 2025 Microchip Technology Inc. and its subsidiaries

26.8.6. Debug Control

Name: DBGCTRL
Offset: 0x08
Reset: 0x00
Property: PAC Write-Protection

Table 26-29. Register Bit Attribute Legend

Symbol	Description	Symbol	Description	Symbol	Description
R	Readable bit	**HC**	Cleared by Hardware	(Grey cell)	Unimplemented
W	Writable bit	**HS**	Set by Hardware	**X**	Bit is unknown at Reset
K	Write to clear	**S**	Software settable bit	—	—

Bit	7	6	5	4	3	2	1	0
								DBGRUN
Access								R/W
Reset								0

Bit 0 – DBGRUN Debug Run Mode
This bit is not affected by a software Reset, and should not be changed by software while the TC is enabled.

Value	Description
0	The TC is halted when the device is halted in Debug mode.
1	The TC continues normal operation when the device is halted in Debug mode.

© 2025 Microchip Technology Inc. and its subsidiaries

26.8.7. Event Control

Name: EVCTRL
Offset: 0x0A
Reset: 0x0000
Property: PAC Write-Protection, Enable-Protected

Table 26-30. Register Bit Attribute Legend

Symbol	Description	Symbol	Description	Symbol	Description
R	Readable bit	**HC**	Cleared by Hardware	(Grey cell)	Unimplemented
W	Writable bit	**HS**	Set by Hardware	**X**	Bit is unknown at Reset
K	Write to clear	**S**	Software settable bit	—	—

Bit	15	14	13	12	11	10	9	8
			MCEO1	MCEO0				OVFEO
Access			R/W	R/W				R/W
Reset			0	0				0

Bit	7	6	5	4	3	2	1	0
			TCEI	TCINV		EVACT[2:0]		
Access			R/W	R/W		R/W	R/W	R/W
Reset			0	0		0	0	0

Bits 12, 13 – MCEOx Match or Capture Channel x Event Output Enable [x = 1..0]
These bits enable the generation of an event for every match or capture on channel x.

Value	Description
0	Match/Capture event on channel x is disabled and will not be generated.
1	Match/Capture event on channel x is enabled and will be generated for every compare/capture.

Bit 8 – OVFEO Overflow/Underflow Event Output Enable
This bit enables the Overflow/Underflow event. When enabled, an event will be generated when the counter overflows/underflows.

Value	Description
0	Overflow/Underflow event is disabled and will not be generated.
1	Overflow/Underflow event is enabled and will be generated for every counter overflow/underflow.

Bit 5 – TCEI TC Event Enable
This bit is used to enable asynchronous input events to the TC.

Value	Description
0	Incoming events are disabled.
1	Incoming events are enabled.

Bit 4 – TCINV TC Inverted Event Input Polarity
This bit inverts the asynchronous input event source.

Value	Description
0	Input event source is not inverted.
1	Input event source is inverted.

Bits 2:0 – EVACT[2:0] Event Action
These bits define the event action the TC will perform on an event.

© 2025 Microchip Technology Inc. and its subsidiaries

Value	Name	Description
0x0	OFF	Event action disabled
0x1	RETRIGGER	Start, restart or retrigger TC on event
0x2	COUNT	Count on event
0x3	START	Start TC on event
0x4		
0x5	PPW	Period captured in CC0, pulse width in CC1
0x6	PWP	Period captured in CC1, pulse width in CC0
0x7		

© 2025 Microchip Technology Inc. and its subsidiaries

26.8.8. Interrupt Enable Clear

Name: INTENCLR
Offset: 0x0C
Reset: 0x00
Property: PAC Write-Protection

This register allows the user to disable an interrupt without doing a read-modify-write operation. Changes in this register will also be reflected in the Interrupt Enable Set register (INTENSET).

Table 26-31. Register Bit Attribute Legend

Symbol	Description	Symbol	Description	Symbol	Description
R	Readable bit	**HC**	Cleared by Hardware	(Grey cell)	Unimplemented
W	Writable bit	**HS**	Set by Hardware	**X**	Bit is unknown at Reset
K	Write to clear	**S**	Software settable bit	—	—

Bit	7	6	5	4	3	2	1	0
			MC1	MC0	SYNCRDY		ERR	OVF
Access			R/W	R/W	R/W		R/W	R/W
Reset			0	0	0		0	0

Bits 4, 5 – MCx Match or Capture Channel x Interrupt Enable [x = 1..0]
Writing a '0' to these bits has no effect.
Writing a '1' to MCx will clear the corresponding Match or Capture Channel x Interrupt Enable bit, which disables the Match or Capture Channel x interrupt.

Value	Description
0	The Match or Capture Channel x interrupt is disabled.
1	The Match or Capture Channel x interrupt is enabled.

Bit 3 – SYNCRDY Synchronization Ready Interrupt Enable
Writing a '0' to this bit has no effect.
Writing a one to this bit will clear the Synchronization Ready Interrupt Disable/Enable bit, which disables the Synchronization Ready interrupt.

Value	Description
0	The Synchronization Ready interrupt is disabled.
1	The Synchronization Ready interrupt is enabled.

Bit 1 – ERR Error Interrupt Enable
Writing a '0' to this bit has no effect.
Writing a '1' to this bit will clear the Error Interrupt Enable bit, which disables the Error interrupt.

Value	Description
0	The Error interrupt is disabled.
1	The Error interrupt is enabled.

Bit 0 – OVF Overflow Interrupt Enable
Writing a '0' to this bit has no effect.
Writing a '1' to this bit will clear the Overflow Interrupt Enable bit, which disables the Overflow interrupt request.

Value	Description
0	The Overflow interrupt is disabled.
1	The Overflow interrupt is enabled.

© 2025 Microchip Technology Inc. and its subsidiaries

26.8.9. Interrupt Enable Set

Name: INTENSET
Offset: 0x0D
Reset: 0x00
Property: PAC Write-Protection

This register allows the user to enable an interrupt without doing a read-modify-write operation. Changes in this register will also be reflected in the Interrupt Enable Clear register (INTENCLR).

Table 26-32. Register Bit Attribute Legend

Symbol	Description	Symbol	Description	Symbol	Description
R	Readable bit	**HC**	Cleared by Hardware	(Grey cell)	Unimplemented
W	Writable bit	**HS**	Set by Hardware	**X**	Bit is unknown at Reset
K	Write to clear	**S**	Software settable bit	—	—

Bit	7	6	5	4	3	2	1	0
			MC1	MC0	SYNCRDY		ERR	OVF
Access			R/W	R/W	R/W		R/W	R/W
Reset			0	0	0		0	0

Bits 4, 5 – MCx Match or Capture Channel x Interrupt Enable [x = 1..0]
Writing a '0' to these bits has no effect.
Writing a '1' to MCx will set the corresponding Match or Capture Channel x Interrupt Enable bit, which enables the Match or Capture Channel x interrupt.

Value	Description
0	The Match or Capture Channel x interrupt is disabled.
1	The Match or Capture Channel x interrupt is enabled.

Bit 3 – SYNCRDY Synchronization Ready Interrupt Enable
Writing a '0' to this bit has no effect.
Writing a one to this bit will set the Synchronization Ready Interrupt Disable/Enable bit, which enables the Synchronization Ready interrupt.

Value	Description
0	The Synchronization Ready interrupt is disabled.
1	The Synchronization Ready interrupt is enabled.

Bit 1 – ERR Error Interrupt Enable
Writing a '0' to this bit has no effect.
Writing a '1' to this bit will set the Error Interrupt Enable bit, which enables the Error interrupt.

Value	Description
0	The Error interrupt is disabled.
1	The Error interrupt is enabled.

Bit 0 – OVF Overflow Interrupt Enable
Writing a '0' to this bit has no effect.
Writing a '1' to this bit will set the Overflow Interrupt Enable bit, which enables the Overflow interrupt request.

Value	Description
0	The Overflow interrupt is disabled.
1	The Overflow interrupt is enabled.

© 2025 Microchip Technology Inc. and its subsidiaries

26.8.10. Interrupt Flag Status and Clear

Name: INTFLAG
Offset: 0x0E
Reset: 0x00
Property: -

Table 26-33. Register Bit Attribute Legend

Symbol	Description	Symbol	Description	Symbol	Description
R	Readable bit	**HC**	Cleared by Hardware	(Grey cell)	Unimplemented
W	Writable bit	**HS**	Set by Hardware	**X**	Bit is unknown at Reset
K	Write to clear	**S**	Software settable bit	—	—

Bit	7	6	5	4	3	2	1	0
			MC1	MC0	SYNCRDY		ERR	OVF
Access			R/W	R/W	R/W		R/W	R/W
Reset			0	0	0		0	0

Bits 4, 5 – MCx Match or Capture Channel x [x = 1..0]
This flag is set on a comparison match, or when the corresponding CCx register contains a valid capture value. This flag is set on the next CLK_TC_CNT cycle, and will generate an interrupt request if the corresponding Match or Capture Channel x Interrupt Enable bit in the Interrupt Enable Set register (INTENSET.MCx) is '1'.
Writing a '0' to one of these bits has no effect.
Writing a '1' to one of these bits will clear the corresponding Match or Capture Channel x Interrupt flag
In capture operation, this flag is automatically cleared when CCx register is read.

Bit 3 – SYNCRDY Synchronization Ready Interrupt Enable
Writing a '0' to this bit has no effect.
Writing a one to this bit will clear the Synchronization Ready Interrupt Disable/Enable bit, which disables the Synchronization Ready interrupt.

Value	Description
0	The Synchronization Ready interrupt is disabled.
1	The Synchronization Ready interrupt is enabled.

Bit 1 – ERR Error Interrupt Flag
This flag is set when a new capture occurs on a channel while the corresponding Match or Capture Channel x Interrupt flag is set, in which case there is nowhere to store the new capture.
Writing a '0' to this bit has no effect.
Writing a '1' to this bit clears the Error Interrupt flag.

Bit 0 – OVF Overflow Interrupt Flag
This flag is set on the next CLK_TC_CNT cycle after an Overflow condition occurs, and will generate an interrupt request if INTENCLR.OVF or INTENSET.OVF is '1'.
Writing a '0' to this bit has no effect.
Writing a '1' to this bit clears the Overflow Interrupt flag.

© 2025 Microchip Technology Inc. and its subsidiaries

26.8.11. Status

Name: STATUS
Offset: 0x0F
Reset: 0x08
Property: -

Table 26-34. Register Bit Attribute Legend

Symbol	Description	Symbol	Description	Symbol	Description
R	Readable bit	**HC**	Cleared by Hardware	(Grey cell)	Unimplemented
W	Writable bit	**HS**	Set by Hardware	**X**	Bit is unknown at Reset
K	Write to clear	**S**	Software settable bit	—	—

Bit	7	6	5	4	3	2	1	0
	SYNCBUSY			SLAVE	STOP			
Access	R			R	R			
Reset	0			0	1			

Bit 7 – SYNCBUSY Synchronization Busy
This bit is cleared when the synchronization of registers between the clock domains is complete.
This bit is set when the synchronization of registers between clock domains is started.

Bit 4 – SLAVE Client Status Flag
This bit is only available in 32-bit mode on the Client TC. The bit is set when the associated Host TC is set to run in 32-bit mode.

Bit 3 – STOP Stop Status Flag
This bit is set when the TC is disabled, on a Stop command, or on an overflow/underflow condition when the One-Shot bit in the Control B Set register (CTRLBSET.ONESHOT) is '1'.

Value	Description
0	Counter is running.
1	Counter is stopped.

© 2025 Microchip Technology Inc. and its subsidiaries

26.8.12. Counter Value, 16-bit Mode

Name: COUNT
Offset: 0x10
Reset: 0x00
Property: PAC Write-Protection, Write-Synchronized

Table 26-35. Register Bit Attribute Legend

Symbol	Description	Symbol	Description	Symbol	Description
R	Readable bit	**HC**	Cleared by Hardware	(Grey cell)	Unimplemented
W	Writable bit	**HS**	Set by Hardware	**X**	Bit is unknown at Reset
K	Write to clear	**S**	Software settable bit	—	—

Bit	15	14	13	12	11	10	9	8
	COUNT[15:8]							
Access	R/W	R/W	R/W	R/W	R/W	R/W	R/W	R/W
Reset	0	0	0	0	0	0	0	0

Bit	7	6	5	4	3	2	1	0
	COUNT[7:0]							
Access	R/W	R/W	R/W	R/W	R/W	R/W	R/W	R/W
Reset	0	0	0	0	0	0	0	0

Bits 15:0 – COUNT[15:0] Counter Value
These bits contain the current counter value.
Note: Prior to any read access, this register must be synchronized by the user by writing CTRLA.COUNTSYNC = 1.

© 2025 Microchip Technology Inc. and its subsidiaries

26.8.13. Channel x Compare/Capture Value, 16-bit Mode

Name: CCx
Offset: 0x18 + x*0x02 [x=0..1]
Reset: 0x0000
Property: Write-Synchronized

Table 26-36. Register Bit Attribute Legend

Symbol	Description	Symbol	Description	Symbol	Description
R	Readable bit	**HC**	Cleared by Hardware	(Grey cell)	Unimplemented
W	Writable bit	**HS**	Set by Hardware	**X**	Bit is unknown at Reset
K	Write to clear	**S**	Software settable bit	—	—

Bit	15	14	13	12	11	10	9	8
	CC[15:8]							
Access	R/W	R/W	R/W	R/W	R/W	R/W	R/W	R/W
Reset	0	0	0	0	0	0	0	0

Bit	7	6	5	4	3	2	1	0
	CC[7:0]							
Access	R/W	R/W	R/W	R/W	R/W	R/W	R/W	R/W
Reset	0	0	0	0	0	0	0	0

Bits 15:0 – CC[15:0] Channel x Compare/Capture Value
These bits contain the compare/capture value in 16-bit TC mode. In Match frequency (MFRQ) or Match PWM (MPWM) waveform operation (CTRLA.WAVEGEN), the CC0 register is used as a period register.

© 2025 Microchip Technology Inc. and its subsidiaries

26.9. Register Summary for 32-bit Registers

Offset	Name	Bit Pos.	7	6	5	4	3	2	1	0
0x00	CTRLA	7:0		WAVEGEN[1:0]			MODE[1:0]		ENABLE	SWRST
		15:8			PRESCSYNC[1:0]		RUNSTDBY	PRESCALER[2:0]		
0x02	READREQ	7:0				ADDR[4:0]				
		15:8	RREQ	RCONT						
0x04	CTRLBCLR	7:0	CMD[1:0]					ONESHOT		DIR
0x05	CTRLBSET	7:0	CMD[1:0]					ONESHOT		DIR
0x06	CTRLC	7:0			CPTEN1	CPTEN0			INVEN1	INVEN0
0x07	Reserved									
0x08	DBGCTRL	7:0								DBGRUN
0x09	Reserved									
0x0A	EVCTRL	7:0			TCEI	TCINV		EVACT[2:0]		
		15:8			MCEO1	MCEO0				OVFEO
0x0C	INTENCLR	7:0			MC1	MC0	SYNCRDY		ERR	OVF
0x0D	INTENSET	7:0			MC1	MC0	SYNCRDY		ERR	OVF
0x0E	INTFLAG	7:0			MC1	MC0	SYNCRDY		ERR	OVF
0x0F	STATUS	7:0	SYNCBUSY			SLAVE	STOP			
0x10	COUNT	7:0	COUNT[7:0]							
		15:8	COUNT[15:8]							
		23:16	COUNT[23:16]							
		31:24	COUNT[31:24]							
0x14 ... 0x17	Reserved									
0x18	CC0	7:0	CC[7:0]							
		15:8	CC[15:8]							
		23:16	CC[23:16]							
		31:24	CC[31:24]							
0x1C	CC1	7:0	CC[7:0]							
		15:8	CC[15:8]							
		23:16	CC[23:16]							
		31:24	CC[31:24]							

© 2025 Microchip Technology Inc. and its subsidiaries

26.9.1. Control A

Name: CTRLA
Offset: 0x00
Reset: 0x00000000
Property: PAC Write-Protection, Write-Synchronized bits, Enable-Protected bits

Table 26-37. Register Bit Attribute Legend

Symbol	Description	Symbol	Description	Symbol	Description
R	Readable bit	**HC**	Cleared by Hardware	(Grey cell)	Unimplemented
W	Writable bit	**HS**	Set by Hardware	**X**	Bit is unknown at Reset
K	Write to clear	**S**	Software settable bit	—	—

Bit	15	14	13	12	11	10	9	8
			PRESCSYNC[1:0]		RUNSTDBY	PRESCALER[2:0]		
Access			R/W	R/W	R/W	R/W	R/W	R/W
Reset			0	0	0	0	0	0

Bit	7	6	5	4	3	2	1	0
		WAVEGEN[1:0]			MODE[1:0]		ENABLE	SWRST
Access		R/W	R/W		R/W	R/W	R/W	R/W
Reset		0	0		0	0	0	0

Bits 13:12 – PRESCSYNC[1:0] Prescaler and Counter Synchronization
These bits select whether the counter should wrap around on the next GCLK_TCx clock or the next prescaled GCLK_TCx clock. It also makes it possible to reset the prescaler.
These bits are not write-synchronized, but are enable-protected.

Value	Name	Description
0x0	GCLK	Reload or reset the counter on next generic clock
0x1	PRESC	Reload or reset the counter on next prescaler clock
0x2	RESYNC	Reload or reset the counter on next generic clock. Reset the prescaler counter
0x3	-	Reserved

Bit 11 – RUNSTDBY Run in Standby
This bit is used to keep the TC running in Standby mode.
This bit is not write-synchronized, but is enable-protected.

Value	Description
0	The TC is halted in standby.
1	The TC continues to run in standby.

Bits 10:8 – PRESCALER[2:0] Prescaler
These bits select the counter prescaler factor.
These bits are not write-synchronized, but are enable protected.

Value	Name	Description
0x0	DIV1	Prescaler: GCLK_TC
0x1	DIV2	Prescaler: GCLK_TC/2
0x2	DIV4	Prescaler: GCLK_TC/4
0x3	DIV8	Prescaler: GCLK_TC/8
0x4	DIV16	Prescaler: GCLK_TC/16
0x5	DIV64	Prescaler: GCLK_TC/64
0x6	DIV256	Prescaler: GCLK_TC/256
0x7	DIV1024	Prescaler: GCLK_TC/1024

© 2025 Microchip Technology Inc. and its subsidiaries

Bits 6:5 – WAVEGEN[1:0] Waveform Generation Operation

These bits select the waveform generation operation. They affect the top value, as shown in "Waveform Output Operations". It also controls whether frequency or PWM waveform generation should be used. How these modes differ can also be seen from "Waveform Output Operations". These bits are not write-synchronized, but are enable-protected.

Table 26-38. Waveform Generation Operation

Value	Name	Operation	Top Value	Waveform Output on Match	Waveform Output on Wraparound
0x0	NFRQ	Normal frequency	PER(1)/Max	Toggle	No action
0x1	MFRQ	Match frequency	CC0	Toggle	No action
0x2	NPWM	Normal PWM	PER(1)/Max	Clear when counting up Set when counting down	Set when counting up Clear when counting down
0x3	MPWM	Match PWM	CC0	Clear when counting up Set when counting down	Set when counting up Clear when counting down

Note:

1. This depends on the TC mode. In 8-bit mode, the top value is the Period Value register (PER). In 16-bit and 32-bit modes it is the maximum value.

Bits 3:2 – MODE[1:0] Timer Counter Mode

These bits select the Counter mode.
These bits are not write-synchronized, but are enable protected.

Value	Name	Description
0x0	COUNT16	Counter in 16-bit mode
0x1	COUNT8	Counter in 8-bit mode
0x2	COUNT32	Counter in 32-bit mode
0x3	-	Reserved

Bit 1 – ENABLE Enable

Due to synchronization, there is delay from writing CTRLA.ENABLE until the peripheral is enabled/disabled. The value written to CTRLA.ENABLE will read back immediately, and the ENABLE Synchronization Busy bit in the SYNCBUSY register (SYNCBUSY.ENABLE) will be set. SYNCBUSY.ENABLE will be cleared when the operation is complete.
This bit is not enable protected.

Value	Description
0	The peripheral is disabled.
1	The peripheral is enabled.

Bit 0 – SWRST Software Reset

Writing a '0' to this bit has no effect.
Writing a '1' to this bit resets all registers in the TC, except DBGCTRL, to their initial state, and the TC will be disabled.
Writing a '1' to CTRLA.SWRST will always take precedence; all other writes in the same write-operation will be discarded.
Due to synchronization there is a delay from writing CTRLA.SWRST until the reset is complete. CTRLA.SWRST and SYNCBUSY.SWRST will both be cleared when the reset is complete.
This bit is not enable protected.

Value	Description
0	There is no reset operation ongoing.

© 2025 Microchip Technology Inc. and its subsidiaries

Value	Description
1	The reset operation is ongoing.

© 2025 Microchip Technology Inc. and its subsidiaries

26.9.2. Read Request

Name: READREQ
Offset: 0x02
Reset: 0x0000

Table 26-39. Register Bit Attribute Legend

Symbol	Description	Symbol	Description	Symbol	Description
R	Readable bit	**HC**	Cleared by Hardware	(Grey cell)	Unimplemented
W	Writable bit	**HS**	Set by Hardware	**X**	Bit is unknown at Reset
K	Write to clear	**S**	Software settable bit	—	—

Bit	15	14	13	12	11	10	9	8
	RREQ	RCONT						
Access	W	R/W						
Reset	0	0						

Bit	7	6	5	4	3	2	1	0
				ADDR[4:0]				
Access				R/W	R/W	R/W	R/W	R/W
Reset				0	0	0	0	0

Bit 15 – RREQ Read Request
Writing a zero to this bit has no effect.
This bit will always read as zero.
Writing a one to this bit requests synchronization of the register pointed to by the Address bit group (READREQ. ADDR) and sets the Synchronization Busy bit in the Status register (STATUS.SYNCBUSY).

Bit 14 – RCONT Read Continuously
When continuous synchronization is enabled, the register pointed to by the Address bit group (READREQ.ADDR) will be synchronized automatically every time the register is updated. READREQ.RCONT prevents READREQ.RREQ from clearing automatically. For the continuous read mode, RREQ bit is required to be set once the RCONT bit is set.
Note: Once the continuous synchronization is enabled, the first write in the COUNT/CLOCK register will be stalled for a maximum of 6 APB + 6 TC clock cycles (the time for the on-going read synchronization to complete).

Value	Description
0	Continuous synchronization is disabled.
1	Continuous synchronization is enabled.

Bits 4:0 – ADDR[4:0] Address
These bits select the offset of the register that needs read synchronization. In the TC, only COUNT and CCx are available for read synchronization.

© 2025 Microchip Technology Inc. and its subsidiaries

26.9.3. Control B Clear

Name: CTRLBCLR
Offset: 0x04
Reset: 0x00
Property: PAC Write-Protection, Read-Synchronized, Write-Synchronized

This register allows the user to clear bits in the CTRLB register without doing a read-modify-write operation. Changes in this register will also be reflected in the Control B Set register (CTRLBSET).

Table 26-40. Register Bit Attribute Legend

Symbol	Description	Symbol	Description	Symbol	Description
R	Readable bit	**HC**	Cleared by Hardware	(Grey cell)	Unimplemented
W	Writable bit	**HS**	Set by Hardware	**X**	Bit is unknown at Reset
K	Write to clear	**S**	Software settable bit	—	—

Bit	7	6	5	4	3	2	1	0
	CMD[1:0]					ONESHOT		DIR
Access	R/W	R/W				R/W		R/W
Reset	0	0				0		0

Bits 7:6 – CMD[1:0] Command
These bits are used for software control of the TC. The commands are executed on the next prescaled GCLK_TC clock cycle. When a command has been executed, the CMD bit group will be read back as zero.
Writing 0x0 to these bits has no effect.
Writing a '1' to any of these bits will clear the pending command.

Table 26-41. Command

Value	Name	Description
0x0	NONE	No action
0x1	RETRIGGER	Force a start, restart or retrigger
0x2	STOP	Force a stop
0x3	-	Reserved

Bit 2 – ONESHOT One-Shot on Counter
This bit controls one-shot operation of the TC.
Writing a '0' to this bit has no effect
Writing a '1' to this bit will disable one-shot operation.

Value	Description
0	The TC will wrap around and continue counting on an Overflow/Underflow condition.
1	The TC will wrap around and stop on the next Underflow/Overflow condition.

Bit 0 – DIR Counter Direction
This bit is used to change the direction of the counter.
Writing a '0' to this bit has no effect.
Writing a '1' to this bit will clear the bit and make the counter count up.

Value	Description
0	The timer/counter is counting up (incrementing).
1	The timer/counter is counting down (decrementing).

© 2025 Microchip Technology Inc. and its subsidiaries

26.9.4. Control B Set

Name: CTRLBSET
Offset: 0x05
Reset: 0x00
Property: PAC Write-Protection, Read-synchronized, Write-Synchronized

This register allows the user to set bits in the CTRLB register without doing a read-modify-write operation. Changes in this register will also be reflected in the Control B Clear register (CTRLBCLR).

Table 26-42. Register Bit Attribute Legend

Symbol	Description	Symbol	Description	Symbol	Description
R	Readable bit	**HC**	Cleared by Hardware	(Grey cell)	Unimplemented
W	Writable bit	**HS**	Set by Hardware	**X**	Bit is unknown at Reset
K	Write to clear	**S**	Software settable bit	—	—

Bit	7	6	5	4	3	2	1	0
	CMD[1:0]					ONESHOT		DIR
Access	R/W	R/W				R/W		R/W
Reset	0	0				0		0

Bits 7:6 – CMD[1:0] Command
These bits are used for software control of the TC. The commands are executed on the next prescaled GCLK_TC clock cycle. When a command has been executed, the CMD bit group will be read back as zero.
Writing 0x0 to these bits has no effect.
Writing a '1' to one of these bits will set a command.

Table 26-43. Command

Value	Name	Description
0x0	NONE	No action
0x1	RETRIGGER	Force a start, restart or retrigger
0x2	STOP	Force a stop
0x3	-	Reserved

Bit 2 – ONESHOT One-Shot on Counter
This bit controls one-shot operation of the TC.
Writing a '0' to this bit has no effect
Writing a '1' to this bit will enable one-shot operation.

Value	Description
0	The TC will wrap around and continue counting on an Overflow/Underflow condition.
1	The TC will wrap around and stop on the next Underflow/Overflow condition.

Bit 0 – DIR Counter Direction
This bit is used to change the direction of the counter.
Writing a '0' to this bit has no effect.
Writing a '1' to this bit will make the counter count down.

Value	Description
0	The timer/counter is counting up (incrementing).
1	The timer/counter is counting down (decrementing).

© 2025 Microchip Technology Inc. and its subsidiaries

26.9.5. Control C

Name: CTRLC
Offset: 0x06
Reset: 0x00
Property: PAC Write-Protection, Read-synchronized, Write-Synchronized

Table 26-44. Register Bit Attribute Legend

Symbol	Description	Symbol	Description	Symbol	Description
R	Readable bit	**HC**	Cleared by Hardware	(Grey cell)	Unimplemented
W	Writable bit	**HS**	Set by Hardware	**X**	Bit is unknown at Reset
K	Write to clear	**S**	Software settable bit	—	—

Bit	7	6	5	4	3	2	1	0
			CPTEN1	CPTEN0			INVEN1	INVEN0
Access			R/W	R/W			R/W	R/W
Reset			0	0			0	0

Bits 4, 5 – CPTENx Capture Channel x Enable
These bits are used to select the capture or compare operation on channel x.
Writing a '1' to CPTENx enables capture on channel x.
Writing a '0' to CPTENx disables capture on channel x.

Bits 0, 1 – INVENx Waveform Output x Inversion Enable
These bits are used to select inversion on the output of channel x.
Writing a '1' to INVENx inverts output from WO[x].
Writing a '0' to INVENx disables inversion of output from WO[x].

© 2025 Microchip Technology Inc. and its subsidiaries

26.9.6. Debug Control

Name: DBGCTRL
Offset: 0x08
Reset: 0x00
Property: PAC Write-Protection

Table 26-45. Register Bit Attribute Legend

Symbol	Description	Symbol	Description	Symbol	Description
R	Readable bit	**HC**	Cleared by Hardware	(Grey cell)	Unimplemented
W	Writable bit	**HS**	Set by Hardware	**X**	Bit is unknown at Reset
K	Write to clear	**S**	Software settable bit	—	—

Bit	7	6	5	4	3	2	1	0
								DBGRUN
Access								R/W
Reset								0

Bit 0 – DBGRUN Debug Run Mode
This bit is not affected by a software Reset, and should not be changed by software while the TC is enabled.

Value	Description
0	The TC is halted when the device is halted in Debug mode.
1	The TC continues normal operation when the device is halted in Debug mode.

© 2025 Microchip Technology Inc. and its subsidiaries

26.9.7. Event Control

Name: EVCTRL
Offset: 0x0A
Reset: 0x0000
Property: PAC Write-Protection, Enable-Protected

Table 26-46. Register Bit Attribute Legend

Symbol	Description	Symbol	Description	Symbol	Description
R	Readable bit	**HC**	Cleared by Hardware	(Grey cell)	Unimplemented
W	Writable bit	**HS**	Set by Hardware	**X**	Bit is unknown at Reset
K	Write to clear	**S**	Software settable bit	—	—

Bit	15	14	13	12	11	10	9	8
			MCEO1	MCEO0				OVFEO
Access			R/W	R/W				R/W
Reset			0	0				0

Bit	7	6	5	4	3	2	1	0
			TCEI	TCINV		EVACT[2:0]		
Access			R/W	R/W		R/W	R/W	R/W
Reset			0	0		0	0	0

Bits 12, 13 – MCEOx Match or Capture Channel x Event Output Enable [x = 1..0]
These bits enable the generation of an event for every match or capture on channel x.

Value	Description
0	Match/Capture event on channel x is disabled and will not be generated.
1	Match/Capture event on channel x is enabled and will be generated for every compare/capture.

Bit 8 – OVFEO Overflow/Underflow Event Output Enable
This bit enables the Overflow/Underflow event. When enabled, an event will be generated when the counter overflows/underflows.

Value	Description
0	Overflow/Underflow event is disabled and will not be generated.
1	Overflow/Underflow event is enabled and will be generated for every counter overflow/underflow.

Bit 5 – TCEI TC Event Enable
This bit is used to enable asynchronous input events to the TC.

Value	Description
0	Incoming events are disabled.
1	Incoming events are enabled.

Bit 4 – TCINV TC Inverted Event Input Polarity
This bit inverts the asynchronous input event source.

Value	Description
0	Input event source is not inverted.
1	Input event source is inverted.

Bits 2:0 – EVACT[2:0] Event Action
These bits define the event action the TC will perform on an event.

© 2025 Microchip Technology Inc. and its subsidiaries

Value	Name	Description
0x0	OFF	Event action disabled
0x1	RETRIGGER	Start, restart or retrigger TC on event
0x2	COUNT	Count on event
0x3	START	Start TC on event
0x4		
0x5	PPW	Period captured in CC0, pulse width in CC1
0x6	PWP	Period captured in CC1, pulse width in CC0
0x7		

© 2025 Microchip Technology Inc. and its subsidiaries

26.9.8. Interrupt Enable Clear

Name: INTENCLR
Offset: 0x0C
Reset: 0x00
Property: PAC Write-Protection

This register allows the user to disable an interrupt without doing a read-modify-write operation. Changes in this register will also be reflected in the Interrupt Enable Set register (INTENSET).

Table 26-47. Register Bit Attribute Legend

Symbol	Description	Symbol	Description	Symbol	Description
R	Readable bit	**HC**	Cleared by Hardware	(Grey cell)	Unimplemented
W	Writable bit	**HS**	Set by Hardware	**X**	Bit is unknown at Reset
K	Write to clear	**S**	Software settable bit	—	—

Bit	7	6	5	4	3	2	1	0
			MC1	MC0	SYNCRDY		ERR	OVF
Access			R/W	R/W	R/W		R/W	R/W
Reset			0	0	0		0	0

Bits 4, 5 – MCx Match or Capture Channel x Interrupt Enable [x = 1..0]
Writing a '0' to these bits has no effect.
Writing a '1' to MCx will clear the corresponding Match or Capture Channel x Interrupt Enable bit, which disables the Match or Capture Channel x interrupt.

Value	Description
0	The Match or Capture Channel x interrupt is disabled.
1	The Match or Capture Channel x interrupt is enabled.

Bit 3 – SYNCRDY Synchronization Ready Interrupt Enable
Writing a '0' to this bit has no effect.
Writing a one to this bit will clear the Synchronization Ready Interrupt Disable/Enable bit, which disables the Synchronization Ready interrupt.

Value	Description
0	The Synchronization Ready interrupt is disabled.
1	The Synchronization Ready interrupt is enabled.

Bit 1 – ERR Error Interrupt Enable
Writing a '0' to this bit has no effect.
Writing a '1' to this bit will clear the Error Interrupt Enable bit, which disables the Error interrupt.

Value	Description
0	The Error interrupt is disabled.
1	The Error interrupt is enabled.

Bit 0 – OVF Overflow Interrupt Enable
Writing a '0' to this bit has no effect.
Writing a '1' to this bit will clear the Overflow Interrupt Enable bit, which disables the Overflow interrupt request.

Value	Description
0	The Overflow interrupt is disabled.
1	The Overflow interrupt is enabled.

© 2025 Microchip Technology Inc. and its subsidiaries

26.9.9. Interrupt Enable Set

Name: INTENSET
Offset: 0x0D
Reset: 0x00
Property: PAC Write-Protection

This register allows the user to enable an interrupt without doing a read-modify-write operation. Changes in this register will also be reflected in the Interrupt Enable Clear register (INTENCLR).

Table 26-48. Register Bit Attribute Legend

Symbol	Description	Symbol	Description	Symbol	Description
R	Readable bit	**HC**	Cleared by Hardware	(Grey cell)	Unimplemented
W	Writable bit	**HS**	Set by Hardware	**X**	Bit is unknown at Reset
K	Write to clear	**S**	Software settable bit	—	—

Bit	7	6	5	4	3	2	1	0
			MC1	MC0	SYNCRDY		ERR	OVF
Access			R/W	R/W	R/W		R/W	R/W
Reset			0	0	0		0	0

Bits 4, 5 – MCx Match or Capture Channel x Interrupt Enable [x = 1..0]
Writing a '0' to these bits has no effect.
Writing a '1' to MCx will set the corresponding Match or Capture Channel x Interrupt Enable bit, which enables the Match or Capture Channel x interrupt.

Value	Description
0	The Match or Capture Channel x interrupt is disabled.
1	The Match or Capture Channel x interrupt is enabled.

Bit 3 – SYNCRDY Synchronization Ready Interrupt Enable
Writing a '0' to this bit has no effect.
Writing a one to this bit will set the Synchronization Ready Interrupt Disable/Enable bit, which enables the Synchronization Ready interrupt.

Value	Description
0	The Synchronization Ready interrupt is disabled.
1	The Synchronization Ready interrupt is enabled.

Bit 1 – ERR Error Interrupt Enable
Writing a '0' to this bit has no effect.
Writing a '1' to this bit will set the Error Interrupt Enable bit, which enables the Error interrupt.

Value	Description
0	The Error interrupt is disabled.
1	The Error interrupt is enabled.

Bit 0 – OVF Overflow Interrupt Enable
Writing a '0' to this bit has no effect.
Writing a '1' to this bit will set the Overflow Interrupt Enable bit, which enables the Overflow interrupt request.

Value	Description
0	The Overflow interrupt is disabled.
1	The Overflow interrupt is enabled.

© 2025 Microchip Technology Inc. and its subsidiaries

26.9.10. Interrupt Flag Status and Clear

Name: INTFLAG
Offset: 0x0E
Reset: 0x00
Property: -

Table 26-49. Register Bit Attribute Legend

Symbol	Description	Symbol	Description	Symbol	Description
R	Readable bit	**HC**	Cleared by Hardware	(Grey cell)	Unimplemented
W	Writable bit	**HS**	Set by Hardware	**X**	Bit is unknown at Reset
K	Write to clear	**S**	Software settable bit	—	—

Bit	7	6	5	4	3	2	1	0
			MC1	MC0	SYNCRDY		ERR	OVF
Access			R/W	R/W	R/W		R/W	R/W
Reset			0	0	0		0	0

Bits 4, 5 – MCx Match or Capture Channel x [x = 1..0]
This flag is set on a comparison match, or when the corresponding CCx register contains a valid capture value. This flag is set on the next CLK_TC_CNT cycle, and will generate an interrupt request if the corresponding Match or Capture Channel x Interrupt Enable bit in the Interrupt Enable Set register (INTENSET.MCx) is '1'.
Writing a '0' to one of these bits has no effect.
Writing a '1' to one of these bits will clear the corresponding Match or Capture Channel x Interrupt flag
In capture operation, this flag is automatically cleared when CCx register is read.

Bit 3 – SYNCRDY Synchronization Ready Interrupt Enable
Writing a '0' to this bit has no effect.
Writing a one to this bit will clear the Synchronization Ready Interrupt Disable/Enable bit, which disables the Synchronization Ready interrupt.

Value	Description
0	The Synchronization Ready interrupt is disabled.
1	The Synchronization Ready interrupt is enabled.

Bit 1 – ERR Error Interrupt Flag
This flag is set when a new capture occurs on a channel while the corresponding Match or Capture Channel x Interrupt flag is set, in which case there is nowhere to store the new capture.
Writing a '0' to this bit has no effect.
Writing a '1' to this bit clears the Error Interrupt flag.

Bit 0 – OVF Overflow Interrupt Flag
This flag is set on the next CLK_TC_CNT cycle after an Overflow condition occurs, and will generate an interrupt request if INTENCLR.OVF or INTENSET.OVF is '1'.
Writing a '0' to this bit has no effect.
Writing a '1' to this bit clears the Overflow Interrupt flag.

© 2025 Microchip Technology Inc. and its subsidiaries

26.9.11. Status

Name: STATUS
Offset: 0x0F
Reset: 0x08
Property: -

Table 26-50. Register Bit Attribute Legend

Symbol	Description	Symbol	Description	Symbol	Description
R	Readable bit	**HC**	Cleared by Hardware	(Grey cell)	Unimplemented
W	Writable bit	**HS**	Set by Hardware	**X**	Bit is unknown at Reset
K	Write to clear	**S**	Software settable bit	—	—

Bit	7	6	5	4	3	2	1	0
	SYNCBUSY			SLAVE	STOP			
Access	R			R	R			
Reset	0			0	1			

Bit 7 – SYNCBUSY Synchronization Busy
This bit is cleared when the synchronization of registers between the clock domains is complete.
This bit is set when the synchronization of registers between clock domains is started.

Bit 4 – SLAVE Client Status Flag
This bit is only available in 32-bit mode on the Client TC. The bit is set when the associated Host TC is set to run in 32-bit mode.

Bit 3 – STOP Stop Status Flag
This bit is set when the TC is disabled, on a Stop command, or on an overflow/underflow condition when the One-Shot bit in the Control B Set register (CTRLBSET.ONESHOT) is '1'.

Value	Description
0	Counter is running.
1	Counter is stopped.

© 2025 Microchip Technology Inc. and its subsidiaries

26.9.12. Counter Value, 32-bit Mode

Name: COUNT
Offset: 0x10
Reset: 0x00
Property: PAC Write-Protection, Write-Synchronized

Table 26-51. Register Bit Attribute Legend

Symbol	Description	Symbol	Description	Symbol	Description
R	Readable bit	**HC**	Cleared by Hardware	(Grey cell)	Unimplemented
W	Writable bit	**HS**	Set by Hardware	**X**	Bit is unknown at Reset
K	Write to clear	**S**	Software settable bit	—	—

Bit	31	30	29	28	27	26	25	24
	COUNT[31:24]							
Access	R/W	R/W	R/W	R/W	R/W	R/W	R/W	R/W
Reset	0	0	0	0	0	0	0	0

Bit	23	22	21	20	19	18	17	16
	COUNT[23:16]							
Access	R/W	R/W	R/W	R/W	R/W	R/W	R/W	R/W
Reset	0	0	0	0	0	0	0	0

Bit	15	14	13	12	11	10	9	8
	COUNT[15:8]							
Access	R/W	R/W	R/W	R/W	R/W	R/W	R/W	R/W
Reset	0	0	0	0	0	0	0	0

Bit	7	6	5	4	3	2	1	0
	COUNT[7:0]							
Access	R/W	R/W	R/W	R/W	R/W	R/W	R/W	R/W
Reset	0	0	0	0	0	0	0	0

Bits 31:0 – COUNT[31:0] Counter Value
These bits contain the current counter value.
Note: Prior to any read access, this register must be synchronized by the user by writing CTRLA.COUNTSYNC=1.

© 2025 Microchip Technology Inc. and its subsidiaries

26.9.13. Channel x Compare/Capture Value, 32-bit Mode

Name: CCx
Offset: 0x18 + x*0x04 [x=0..1]
Reset: 0x00000000
Property: Write-Synchronized

Table 26-52. Register Bit Attribute Legend

Symbol	Description	Symbol	Description	Symbol	Description
R	Readable bit	**HC**	Cleared by Hardware	(Grey cell)	Unimplemented
W	Writable bit	**HS**	Set by Hardware	**X**	Bit is unknown at Reset
K	Write to clear	**S**	Software settable bit	—	—

Bit	31	30	29	28	27	26	25	24
	CC[31:24]							
Access	R/W	R/W	R/W	R/W	R/W	R/W	R/W	R/W
Reset	0	0	0	0	0	0	0	0

Bit	23	22	21	20	19	18	17	16
	CC[23:16]							
Access	R/W	R/W	R/W	R/W	R/W	R/W	R/W	R/W
Reset	0	0	0	0	0	0	0	0

Bit	15	14	13	12	11	10	9	8
	CC[15:8]							
Access	R/W	R/W	R/W	R/W	R/W	R/W	R/W	R/W
Reset	0	0	0	0	0	0	0	0

Bit	7	6	5	4	3	2	1	0
	CC[7:0]							
Access	R/W	R/W	R/W	R/W	R/W	R/W	R/W	R/W
Reset	0	0	0	0	0	0	0	0

Bits 31:0 – CC[31:0] Channel x Compare/Capture Value
These bits contain the compare/capture value in 32-bit TC mode. In Match frequency (MFRQ) or Match PWM (MPWM) waveform operation (CTRLA.WAVEGEN), the CC0 register is used as a period register.

© 2025 Microchip Technology Inc. and its subsidiaries

27. ADC - Analog-to-Digital Converter

27.1. Overview

The ADC converts analog signals to digital values. The ADC has 12-bit resolution and is capable of converting up to 350 ksps. The input selection is flexible as both differential and single-ended measurements can be performed. An optional gain stage is available to increase the dynamic range. In addition, several internal signal inputs are available. The ADC can provide both signed and unsigned results.

ADC measurements can be started by either application software or an incoming event from another peripheral in the device. ADC measurements can be started with predictable timing and without software intervention.

Both internal and external reference voltages can be used.

An integrated temperature sensor is available for use with the ADC. The bandgap voltage as well as the scaled I/O and core voltages can also be measured by the ADC.

The ADC has a compare function for accurate monitoring of user-defined thresholds with minimum software intervention required.

The ADC can be configured for 8-bit, 10-bit, or 12-bit results, reducing the conversion time. ADC conversion results are provided left or right adjusted, which eases calculation when the result is represented as a signed value.

27.2. Features

The following are key features of the ADC module:

- 8-bit, 10-bit, or 12-bit resolution
- Up to 350,000 samples per second (350 ksps)
- Differential and single-ended inputs:
  - Up to 32 analog input
  - 25 positive and 10 negative, including internal and external
- Five internal inputs
  - Bandgap
  - Temperature sensor
  - DAC
  - Scaled core supply
  - Scaled I/O supply
- 1/2x to 16x gain
- Single, Continuous and Pin-scan Conversion Options
- Windowing Monitor with Selectable Channel
- Conversion Range:
  - V_{ref} [1v to AVDD - 0.6V]
  - ADCx * GAIN [0V to -V_{ref}]
- Built-in Internal Reference and External Reference Options:
  - Four bits for reference selection
- Event-triggered Conversion for Accurate Timing (One Event Input)
- Hardware Gain and Offset Compensation

© 2025 Microchip Technology Inc. and its subsidiaries

- Averaging and Oversampling with Decimation to Support, up to 16-bit Result
- Selectable Sampling Time

27.3. Block Diagram

Figure 27-1. ADC Block Diagram

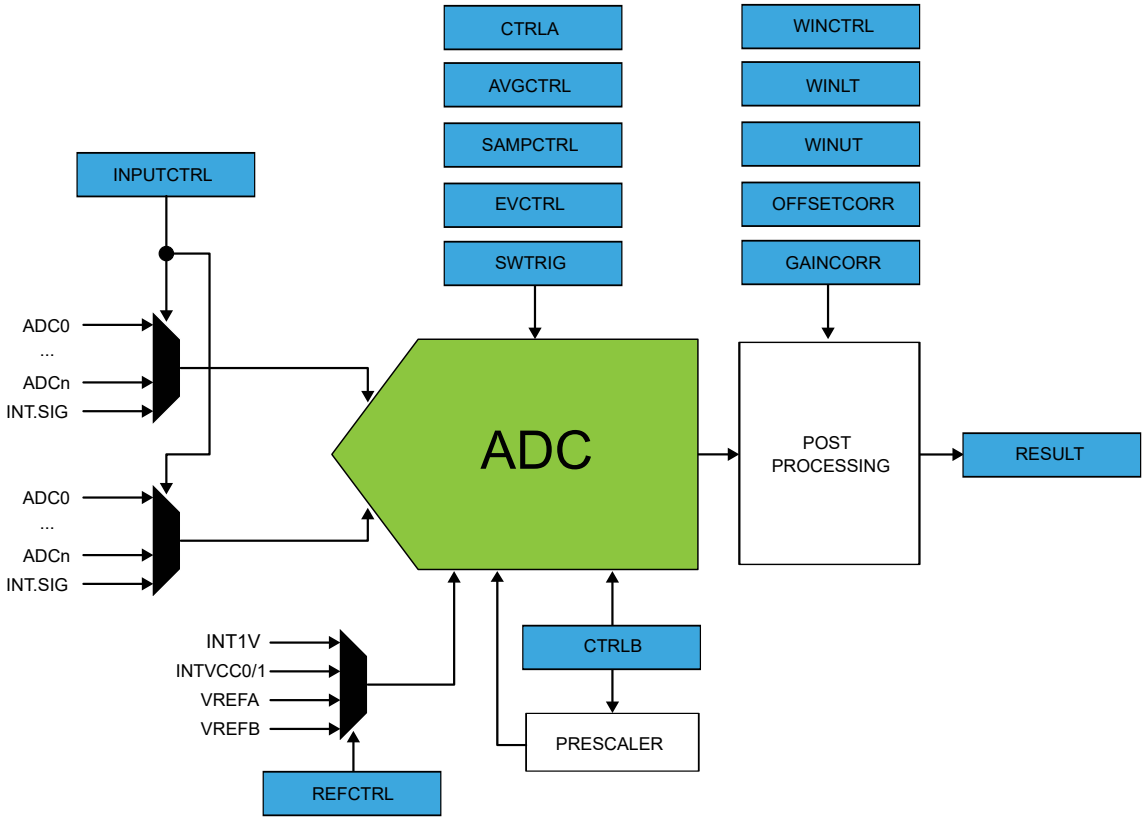

Note: INT1V is the buffered internal reference of 1.0V, derived from the internal 1.1V bandgap reference.

27.4. Signal Description

Signal Name	Type	Description
VREFA	Analog input	External reference voltage A
VREFB	Analog input	External reference voltage B
ADC[19..0][(1)]	Analog input	Analog input channels

Note: Refer to *Configuration Summary* for details on exact number of analog input channels.

Note: Refer to *I/O Multiplexing and Considerations* for details on the pin mapping for this peripheral. One signal can be mapped on several pins.

© 2025 Microchip Technology Inc. and its subsidiaries

27.5. Peripheral Dependencies

Table 27-1. Peripherals Configuration Summary

Peripheral Name	Base Address	IRQ Line	AHB Clock		APB Clock		Generic Clock	PAC		Events		
			Index	Enabled at Reset	Index	Enabled at Reset	Index	Index	Prot at Reset	User	Generator	SleepWalking
ADC	0x42004000	21			16	Y	23	16	N	8: START 9: SYNC	52: RESRDY 53: WINMON	Y

27.5.1. I/O Lines

Using the ADC's I/O lines requires the I/O pins to be configured using the port configuration (PORT).

27.5.2. Power Management

The ADC will continue to operate in any Sleep mode where the selected source clock is running. The ADC's interrupts, except the OVERRUN interrupt, can be used to wake up the device from sleep modes. Events connected to the event system can trigger other operations in the system without exiting sleep modes.

27.5.3. Clocks

The ADC can be enabled in the Main Clock, which also defines the default state.

This clock must be configured and enabled in the Generic Clock Controller (GCLK) before using the ADC.

A generic clock is asynchronous to the bus clock. Due to this asynchronicity, writes to certain registers will require synchronization between the clock domains. Refer to the section "Synchronization" for additional information.

27.5.4. Interrupts

The interrupt request line is connected to the interrupt controller. Using the ADC interrupt requires the interrupt controller to be configured first.

27.5.5. Events

The events are connected to the Event System.

27.5.6. Debug Operation

When the CPU is halted in Debug mode the ADC will halt normal operation. The ADC can be forced to continue operation during debugging.

27.5.7. Register Access Protection

All registers with write-access are optionally write-protected by the Peripheral Access Controller (PAC), except the following register:

- Interrupt Flag Status and Clear (INTFLAG) register

Optional write protection by the Peripheral Access Controller (PAC) is denoted by the "PAC Write Protection" property in each individual register description.

PAC write protection does not apply to accesses through an external debugger.

27.5.8. Analog Connections

I/O-pins AIN0 to AIN19 as well as the VREFA/VREFB reference voltage pin are analog inputs to the ADC.

© 2025 Microchip Technology Inc. and its subsidiaries

27.5.9. Calibration

The values BIAS_CAL and LINEARITY_CAL from the production test must be loaded from the NVM Software Calibration Area into the ADC Calibration register (CALIB) by software to achieve specified accuracy.

27.6. Functional Description

27.6.1. Principle of Operation

By default, the ADC provides results with 12-bit resolution. The 8-bit or 10-bit results can be selected in order to reduce the conversion time.

The ADC has an oversampling with decimation option that can extend the resolution to 16-bits. The input values can be either internal (e.g., internal temperature sensor) or external (connected I/O pins). The user can also configure whether the conversion should be single-ended or differential.

27.6.2. Basic Operation

27.6.2.1. Initialization

Before enabling the ADC, the asynchronous clock source must be selected and enabled, and the ADC reference must be configured. The first conversion after the reference is changed must not be used. All other configuration registers must be stable during the conversion. The source for GCLK_ADC is selected and enabled in the System Controller (SYSCTRL). Refer to *SYSCTRL – System Controller* for more details.

When GCLK_ADC is enabled, the ADC can be enabled by writing a one to the Enable bit in the Control Register A (CTRLA.ENABLE).

27.6.2.2. Enabling, Disabling and Reset

The ADC is enabled by writing a '1' to the Enable bit in the Control A register (CTRLA.ENABLE). The ADC is disabled by writing CTRLA.ENABLE=0. The ADC is Reset by writing a '1' to the Software Reset bit in the Control A register (CTRLA.SWRST). All registers in the ADC, except DBGCTRL, will be reset to their initial state, and the ADC will be disabled.

The ADC must be disabled before it is reset.

27.6.2.3. Operation

In the most basic configuration, the ADC samples values from the configured internal or external sources (INPUTCTRL register). The rate of the conversion depends on the combination of the GCLK_ADCx frequency and the clock prescaler.

To convert analog values to digital values, the ADC needs to be initialized first, as described in Initialization. Data conversion can be started either manually by setting the Start bit in the Software Trigger register (SWTRIG.START=1), or automatically by configuring an automatic trigger to initiate the conversions. A Free-Running mode can be used to continuously convert an input channel. When using Free-Running mode the first conversion must be started, while subsequent conversions will start automatically at the end of previous conversions.

The automatic trigger can be configured to trigger on many different conditions.

The result of the conversion is stored in the Result register (RESULT) overwriting the result from the previous conversion.

To avoid data loss if more than one channel is enabled, the conversion result must be read as soon as it is available (INTFLAG.RESRDY). Failing to do so will result in an overrun error condition, indicated by the OVERRUN bit in the Interrupt Flag Status and Clear register (INTFLAG.OVERRUN). When the RESRDY interrupt flag is set, the new result has been synchronized to the RESULT register.

To enable one of the available interrupts sources, the corresponding bit in the Interrupt Enable Set register (INTENSET) must be written to '1'.

© 2025 Microchip Technology Inc. and its subsidiaries

27.6.3. Prescaler

The ADC is clocked by GCLK_ADC. There is also a prescaler in the ADC to enable conversion at lower clock rates. Refer to CTRLB for additional information on prescaler settings.

Figure 27-2. ADC Prescaler

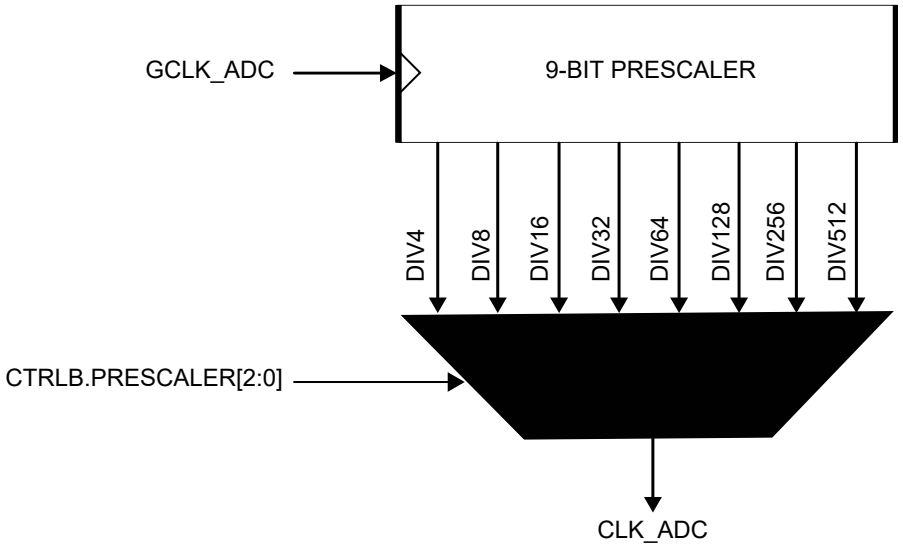

The propagation delay of an ADC measurement depends on the selected mode and is given as follows:

- Single-shot mode:

$$\text{PropagationDelay} = \frac{1 + \frac{\text{Resolution}}{2} + \text{DelayGain}}{f_{\text{CLK_ADC}}}$$

- Free-running mode:

$$\text{PropagationDelay} = \frac{\frac{\text{Resolution}}{2} + \text{DelayGain}}{f_{\text{CLK_ADC}}}$$

Table 27-2. Delay Gain

		Delay Gain (in CLK_ADC Period)			
	INTPUTCTRL.GAIN[3:0]	Single-shot mode		Free-running mode	
Name		Differential mode	Single-Ended mode	Differential mode	Single-Ended mode
1X	0x0	0	0	0	1
2X	0x1	0	1	0.5	1.5
4X	0x2	1	1	1	2
8X	0x3	1	2	1.5	2.5
16X	0x4	2	2	2	3
Reserved	0x5 ... 0xE	Reserved	Reserved	Reserved	Reserved
DIV2	0xF	0	1	0.5	1.5

27.6.4. ADC Resolution

The ADC supports 8-bit, 10-bit or 12-bit resolution. Resolution can be changed by writing the Resolution bit group in the Control B register (CTRLB.RESSEL). By default, the ADC resolution is set to 12 bits.

27.6.5. Differential and Single-Ended Conversions

The ADC has two conversion options: Differential and Single-ended

© 2025 Microchip Technology Inc. and its subsidiaries

- If the positive input may go below the negative input, the **Differential** mode should be used in order to get correct results.
- If the positive input is always positive, the **Single-ended** conversion should be used in order to have full 12-bit resolution in the conversion.

The negative input must be connected to ground. This ground could be the internal GND, IOGND or an external ground connected to a pin. Refer to the Control B (CTRLB) register for selection details.

If the positive input may go below the negative input, creating some negative results, the Differential mode should be used in order to get correct results. The Differential mode is enabled by setting DIFFMODE bit in the Control B register (CTRLB.DIFFMODE). Both conversion types could be run in Single mode or in Free-running mode. When the Free-running mode is selected, an ADC input will continuously sample the input and performs a new conversion. The INTFLAG.RESRDY bit will be set at the end of each conversion.

27.6.5.1. Conversion Timing

The following figure shows the ADC timing for one single conversion. A conversion starts after the software or event start are synchronized with the GCLK_ADC clock. The input channel is sampled in the first half CLK_ADC period.

Figure 27-3. ADC Timing for One Conversion in Differential Mode without Gain

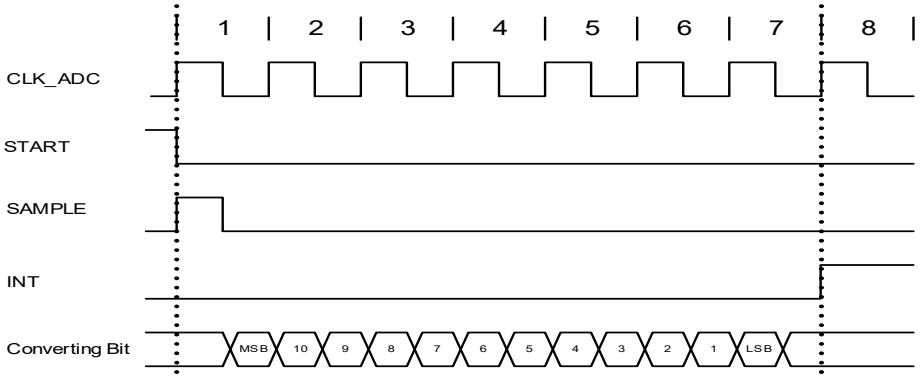

The sampling time can be increased by using the Sampling Time Length bit group in the Sampling Time Control register (SAMPCTRL.SAMPLEN). As an example, the next figures show the timing conversion.

Figure 27-4. ADC Timing for One Conversion in Differential Mode without Gain, but with Increased Sampling Time

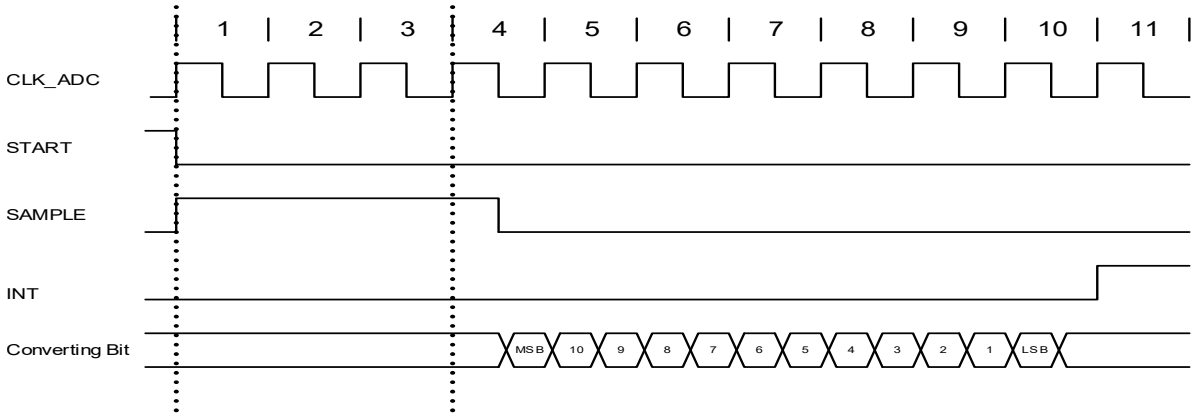

© 2025 Microchip Technology Inc. and its subsidiaries

Figure 27-5. ADC Timing for Free Running in Differential Mode without Gain

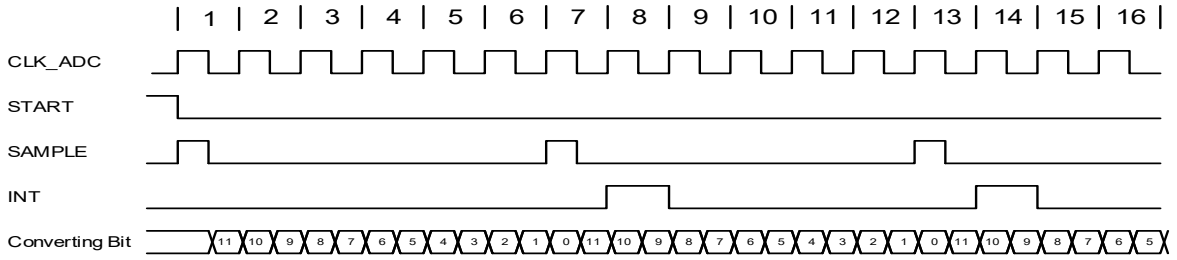

Figure 27-6. ADC Timing for One Conversion in Single-Ended Mode without Gain

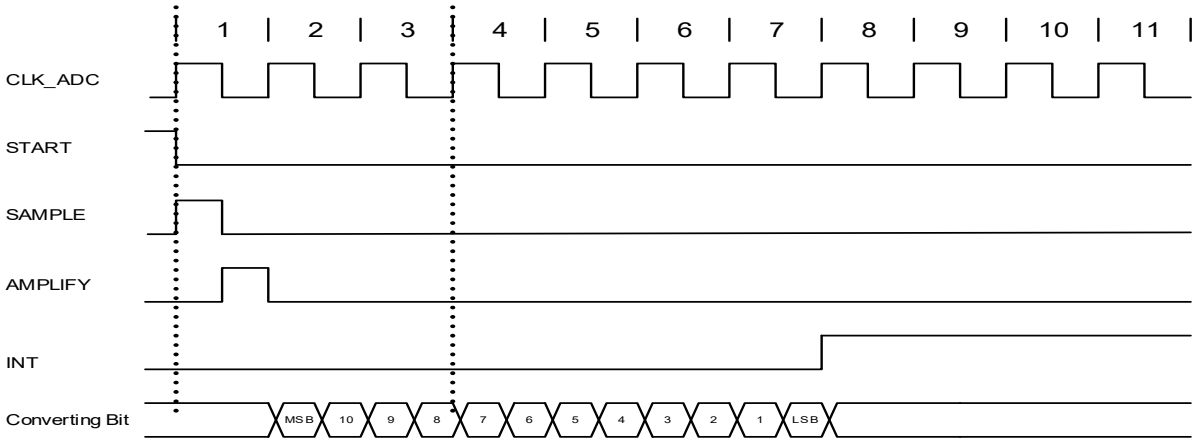

Figure 27-7. ADC Timing for Free Running in Single-Ended Mode without Gain

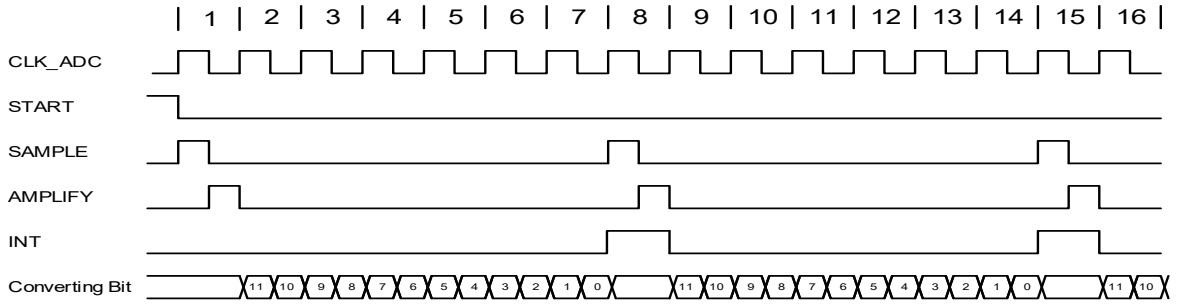

27.6.6. Accumulation

The result from multiple consecutive conversions can be accumulated. The number of samples to be accumulated is specified by the Number of Samples to be Collected field in the Average Control register (AVGCTRL.SAMPLENUM). When accumulating more than 16 samples, the result will be too large to match the 16-bit RESULT register size. To avoid overflow, the result is right shifted automatically to fit within the available register size. The number of automatic right shifts is specified in the table below.

Note: To perform the accumulation of two or more samples, the Conversion Result Resolution field in the Control B register (CTRLB.RESSEL) must be set.

Table 27-3. Accumulation

Number of Accumulated Samples	AVGCTRL. SAMPLENUM	Intermediate Result Precision	Number of Automatic Right Shifts	Final Result Precision	Automatic Division Factor
1	0x0	12 bits	0	12 bits	0

© 2025 Microchip Technology Inc. and its subsidiaries

Table 27-3. Accumulation (continued)

Number of Accumulated Samples	AVGCTRL. SAMPLENUM	Intermediate Result Precision	Number of Automatic Right Shifts	Final Result Precision	Automatic Division Factor
2	0x1	13 bits	0	13 bits	0
4	0x2	14 bits	0	14 bits	0
8	0x3	15 bits	0	15 bits	0
16	0x4	16 bits	0	16 bits	0
32	0x5	17 bits	1	16 bits	2
64	0x6	18 bits	2	16 bits	4
128	0x7	19 bits	3	16 bits	8
256	0x8	20 bits	4	16 bits	16
512	0x9	21 bits	5	16 bits	32
1024	0xA	22 bits	6	16 bits	64
Reserved	0xB - 0xF	12 bits		12 bits	0

27.6.7. Averaging

Averaging is a feature that increases the sample accuracy at the cost of a reduced sampling rate. This feature is suitable when operating in noisy conditions.

Averaging is done by accumulating m samples, as described in the Accumulationsection, and dividing the result by m. The averaged result is available in the RESULT register. The number of samples to be accumulated is specified by writing to AVGCTRL.SAMPLENUM.

The division is obtained by a combination of the automatic right shift described above, and an additional right shift that must be specified by writing to the Adjusting Result/Division Coefficient field in AVGCTRL (AVGCTRL.ADJRES).

Note: To perform the averaging of two or more samples, the Conversion Result Resolution field in the Control B register (CTRLB.RESSEL) must be set to '1'.

Averaging AVGCTRL.SAMPLENUM samples will reduce the un-averaged sampling rate by a factor $\frac{1}{\text{AVGCTRL.SAMPLENUM}}$.

When the averaged result is available, the INTFLAG.RESRDY bit will be set.

Table 27-4. Averaging

Number of Accumulated Samples	AVGCTRL. SAMPLENUM	Intermediate Result Precision	Number of Automatic Right Shifts	Division Factor	AVGCTRL.ADJRES	Total Number of Right Shifts	Final Result Precision	Automatic Division Factor
1	0x0	12 bits	0	1	0x0		12 bits	0
2	0x1	13	0	2	0x1	1	12 bits	0
4	0x2	14	0	4	0x2	2	12 bits	0
8	0x3	15	0	8	0x3	3	12 bits	0
16	0x4	16	0	16	0x4	4	12 bits	0
32	0x5	17	1	16	0x4	5	12 bits	2
64	0x6	18	2	16	0x4	6	12 bits	4
128	0x7	19	3	16	0x4	7	12 bits	8
256	0x8	20	4	16	0x4	8	12 bits	16
512	0x9	21	5	16	0x4	9	12 bits	32
1024	0xA	22	6	16	0x4	10	12 bits	64
Reserved	0xB-0xF				0x0		12 bits	0

© 2025 Microchip Technology Inc. and its subsidiaries

27.6.8. Oversampling and Decimation

By using oversampling and decimation, the ADC resolution can be increased from 12 bits up to 16 bits, for the cost of reduced effective sampling rate.

Note: To perform oversampling and decimation, the Conversion Result Resolution field in the Control C register (CTRLC.RESSEL) must be set to 16-bit mode.

To increase the resolution by 'n' bits, 4^n samples must be accumulated. The result must then be right shifted by 'n' bits. This right shift is a combination of the automatic right shift and the value written to AVGCTRL.ADJRES. To obtain the correct resolution, the ADJRES must be configured as described in the table below. This method will result in 'n' bit extra LSB resolution.

Table 27-5. Configuration Required for Oversampling and Decimation

Result Resolution	Number of Samples to Average	AVGCTRL.SAMPLENUM[3:0]	Number of Automatic Right Shifts	AVGCTRL.ADJRES[2:0]
13 bits	$4^1 = 4$	0x2	0	0x1
14 bits	$4^2 = 16$	0x4	0	0x2
15 bits	$4^3 = 64$	0x6	2	0x1
16 bits	$4^4 = 256$	0x8	4	0x0

27.6.9. Window Monitor

The window monitor feature allows the conversion result in the RESULT register to be compared to predefined threshold values. The Window mode is selected by setting the Window Monitor Mode bits in the Window Monitor Control register (WINCTRL.WINMODE[2:0]). Threshold values must be written in the Window Monitor Lower Threshold register (WINLT) and Window Monitor Upper Threshold register (WINUT).

If differential input is selected, the WINLT and WINUT are evaluated as signed values. Otherwise they are evaluated as unsigned values. The significant WINLT and WINUT bits are given by the precision selected in the Conversion Result Resolution bit group in the Control B register (CTRLB.RESSEL). For example, this means that in 8-bit mode, only the eight lower bits will be considered. In addition, in Differential mode, the eighth bit will be considered as the Sign bit, even if the ninth bit is zero.

The INTFLAG.WINMON Interrupt flag will be set if the conversion result matches the window monitor condition.

27.6.10. Offset and Gain Correction

Inherent gain and offset errors affect the absolute accuracy of the ADC.

The offset error is defined as the deviation of the actual ADC transfer function from an ideal straight line at zero input voltage. The offset error cancellation is handled by the Offset Correction register (OFFSETCORR). The offset correction value is subtracted from the converted data before writing to the Result register (RESULT).

The gain error is defined as the deviation of the last output step's midpoint from the ideal straight line, after compensating for offset error. The gain error cancellation is handled by the Gain Correction register (GAINCORR).

To correct these two errors, the Digital Correction Logic Enabled bit in the Control B register (CTRLB.CORREN) must be set.

Offset and gain error compensation results are both calculated according to:

$$\text{Result} = (\text{Conversion value} + -\text{OFFSETCORR}) \cdot \text{GAINCORR}$$

The correction will introduce a latency of 13 CLK_ADC clock cycles. In Free-running mode this latency is introduced on the first conversion only because the duration is always less than the propagation delay. In Single Conversion mode this latency is introduced for each conversion.

© 2025 Microchip Technology Inc. and its subsidiaries

Figure 27-8. ADC Timing Correction Enabled

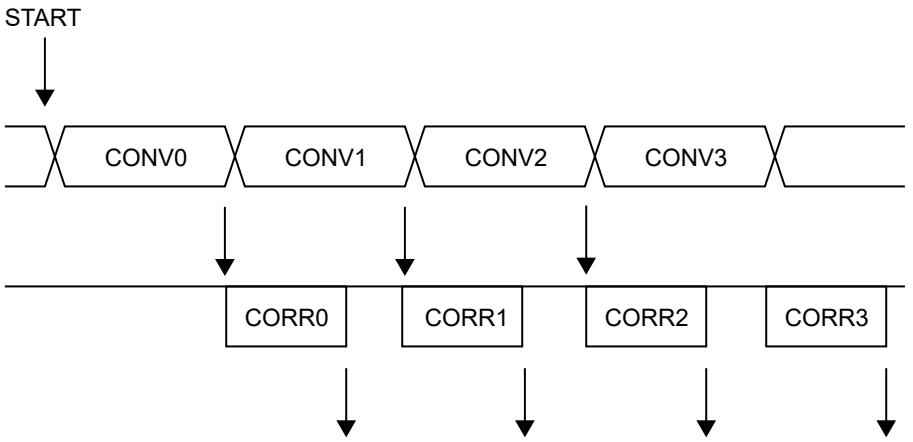

27.6.11. Interrupts

The ADC has the following interrupt sources:

- Result Conversion Ready: RESRDY
- Window Monitor: WINMON
- Overrun: OVERRUN

Each interrupt source has an Interrupt flag associated with it. The Interrupt flag in the Interrupt Flag Status and Clear (INTFLAG) register is set when the Interrupt condition occurs. Each interrupt can be individually enabled by writing a one to the corresponding bit in the Interrupt Enable Set (INTENSET) register, and disabled by writing a one to the corresponding bit in the Interrupt Enable Clear (INTENCLR) register. An interrupt request is generated when the Interrupt flag is set and the corresponding interrupt is enabled. The interrupt request remains active until the Interrupt flag is cleared, the interrupt is disabled, or the ADC is reset. An Interrupt flag is cleared by writing a one to the corresponding bit in the INTFLAG register. Each peripheral can have one interrupt request line per interrupt source or one common interrupt request line for all the interrupt sources. This is device dependent.

Refer to *Nested Vector Interrupt Controller* for details. The user must read the INTFLAG register to determine which Interrupt condition is present.

27.6.12. Events

The ADC can generate the following output events:

- Result Ready (RESRDY): Generated when the conversion is complete and the result is available.
- Window Monitor (WINMON): Generated when the window monitor condition match.

Setting an Event Output bit in the Event Control Register (EVCTRL.xxEO=1) enables the corresponding output event. Clearing this bit disables the corresponding output event. Refer to the *Event System* chapter for details on configuring the event system.

The peripheral can take the following actions on an input event:

- Start conversion (START): Start a conversion.
- Conversion flush (FLUSH): Flush the conversion.

Setting an Event Input bit in the Event Control register (EVCTRL.xxEI=1) enables the corresponding action on input event. Clearing this bit disables the corresponding action on input event.

Note: If several events are connected to the ADC, the enabled action will be taken on any of the incoming events. The events must be correctly routed in the Event System.

© 2025 Microchip Technology Inc. and its subsidiaries

27.6.13. Sleep Mode Operation

The run in the Standby bit in the Control A register (CTRLA.RUNSTDBY) controls the behavior of the ADC during Standby Sleep mode. When CTRLA.RUNSTDBY = 0, the ADC is disabled during sleep, but maintains its current configuration. When CTRLA.RUNSTDBY = 1, the ADC continues to operate during sleep. When CTRLA.RUNSTDBY = 0, the analog blocks are powered off for the lowest power consumption. This necessitates a start-up time delay when the system returns from sleep.

When CTRLA.RUNSTDBY = 1, any enabled ADC interrupt source can wake-up the CPU, except the OVERRUN interrupt.. While the CPU is sleeping, ADC conversion can only be triggered by events.

27.6.14. Synchronization

Due to asynchronicity between the main clock domain and the peripheral clock domains, some registers need to be synchronized when written or read.

When executing an operation that requires synchronization, the Synchronization Busy bit in the Status register (STATUS.SYNCBUSY) will be set immediately, and cleared when synchronization is complete. The Synchronization Ready interrupt can be used to signal when synchronization is complete.

If an operation that requires synchronization is executed while STATUS.SYNCBUSY=1, the bus will be stalled. All operations will complete successfully, but the CPU will be stalled and interrupts will be pending as long as the bus is stalled.

The following bits are synchronized when written:

- Software Reset bit in the Control A register (CTRLA.SWRST)
- Enable bit in the Control A register (CTRLA.ENABLE)

The following registers are synchronized when written:

- Control B (CTRLB)
- Software Trigger (SWTRIG)
- Window Monitor Control (WINCTRL)
- Input Control (INPUTCTRL)
- Window Upper/Lower Threshold (WINUT/WINLT)

Required write synchronization is denoted by the "Write-Synchronized" property in the register description.

The following registers are synchronized when read:

- Software Trigger (SWTRIG)
- Input Control (INPUTCTRL)

Required read synchronization is denoted by the "Read-Synchronized" property in the register description.

© 2025 Microchip Technology Inc. and its subsidiaries

27.7. Register Summary

Offset	Name	Bit Pos.	7	6	5	4	3	2	1	0
0x00	CTRLA	7:0						RUNSTDBY	ENABLE	SWRST
0x01	REFCTRL	7:0	REFCOMP				REFSEL[3:0]			
0x02	AVGCTRL	7:0		ADJRES[2:0]			SAMPLENUM[3:0]			
0x03	SAMPCTRL	7:0			SAMPLEN[5:0]					
0x04	CTRLB	7:0			RESSEL[1:0]		CORREN	FREERUN	LEFTADJ	DIFFMODE
		15:8						PRESCALER[2:0]		
0x06 ... 0x07	Reserved									
0x08	WINCTRL	7:0						WINMODE[2:0]		
0x09 ... 0x0B	Reserved									
0x0C	SWTRIG	7:0							START	FLUSH
0x0D ... 0x0F	Reserved									
0x10	INPUTCTRL	7:0				MUXPOS[4:0]				
		15:8				MUXNEG[4:0]				
		23:16	INPUTOFFSET[3:0]				INPUTSCAN[3:0]			
		31:24					GAIN[3:0]			
0x14	EVCTRL	7:0			WINMONEO	RESRDYEO			SYNCEI	STARTEI
0x15	Reserved									
0x16	INTENCLR	7:0					SYNCRDY	WINMON	OVERRUN	RESRDY
0x17	INTENSET	7:0					SYNCRDY	WINMON	OVERRUN	RESRDY
0x18	INTFLAG	7:0					SYNCRDY	WINMON	OVERRUN	RESRDY
0x19	STATUS	7:0	SYNCBUSY							
0x1A	RESULT	7:0	RESULT[7:0]							
		15:8	RESULT[15:8]							
0x1C	WINLT	7:0	WINLT[7:0]							
		15:8	WINLT[15:8]							
0x1E ... 0x1F	Reserved									
0x20	WINUT	7:0	WINUT[7:0]							
		15:8	WINUT[15:8]							
0x22 ... 0x23	Reserved									
0x24	GAINCORR	7:0	GAINCORR[7:0]							
		15:8					GAINCORR[11:8]			
0x26	OFFSETCORR	7:0	OFFSETCORR[7:0]							
		15:8					OFFSETCORR[11:8]			
0x28	CALIB	7:0	LINEARITY_CAL[7:0]							
		15:8						BIAS_CAL[2:0]		
0x2A	DBGCTRL	7:0								DBGRUN

© 2025 Microchip Technology Inc. and its subsidiaries

27.7.1. Control A

Name: CTRLA
Offset: 0x00
Reset: 0x00
Property: Write-Protected

Table 27-6. Register Bit Attribute Legend

Symbol	Description	Symbol	Description	Symbol	Description
R	Readable bit	**HC**	Cleared by Hardware	(Grey cell)	Unimplemented
W	Writable bit	**HS**	Set by Hardware	**X**	Bit is unknown at Reset
K	Write to clear	**S**	Software settable bit	—	—

Bit	7	6	5	4	3	2	1	0
						RUNSTDBY	ENABLE	SWRST
Access						R/W	R/W	R/W
Reset						0	0	0

Bit 2 – RUNSTDBY Run in Standby

This bit indicates whether the ADC will continue running in Standby Sleep mode or not:

Value	Description
0	The ADC is halted during Standby Sleep mode.
1	The ADC continues normal operation during Standby Sleep mode.

Bit 1 – ENABLE Enable

Due to synchronization, there is a delay from writing CTRLA.ENABLE until the peripheral is enabled/disabled. The value written to CTRL.ENABLE will read back immediately and the Synchronization Busy bit in the Status register (STATUS.SYNCBUSY) will be set. STATUS.SYNCBUSY will be cleared when the operation is complete.

Value	Description
0	The ADC is disabled.
1	The ADC is enabled.

Bit 0 – SWRST Software Reset

Writing a zero to this bit has no effect.
Writing a one to this bit resets all registers in the ADC, except DBGCTRL, to their initial state, and the ADC will be disabled.
Writing a one to CTRL.SWRST will always take precedence, meaning that all other writes in the same write-operation will be discarded.
Due to synchronization, there is a delay from writing CTRLA.SWRST until the Reset is complete. CTRLA.SWRST and STATUS.SYNCBUSY will both be cleared when the Reset is complete.

Value	Description
0	There is no Reset operation ongoing.
1	The Reset operation is ongoing.

© 2025 Microchip Technology Inc. and its subsidiaries

27.7.2. Reference Control

Name: REFCTRL
Offset: 0x01
Reset: 0x00
Property: Write-Protected

Table 27-7. Register Bit Attribute Legend

Symbol	Description	Symbol	Description	Symbol	Description
R	Readable bit	**HC**	Cleared by Hardware	(Grey cell)	Unimplemented
W	Writable bit	**HS**	Set by Hardware	**X**	Bit is unknown at Reset
K	Write to clear	**S**	Software settable bit	—	—

Bit	7	6	5	4	3	2	1	0
	REFCOMP				REFSEL[3:0]			
Access	R/W				R/W	R/W	R/W	R/W
Reset	0				0	0	0	0

Bit 7 – REFCOMP Reference Buffer Offset Compensation Enable
The accuracy of the gain stage can be increased by enabling the reference buffer offset compensation. This will decrease the input impedance and thus increase the start-up time of the reference.

Value	Description
0	Reference buffer offset compensation is disabled.
1	Reference buffer offset compensation is enabled.

Bits 3:0 – REFSEL[3:0] Reference Selection
These bits select the reference for the ADC.

Table 27-8. Reference Selection

REFSEL[3:0]	Name	Description
0x0	INT1V	1.0V voltage reference
0x1	INTVCC0	1/1.48 AVDD
0x2	INTVCC1	1/2 AVDD (only for AVDD > 2.0V)
0x3	VREFA	External reference
0x4	VREFB	External reference
0x5-0xF		Reserved

Note: INT1V is the buffered internal reference of 1.0V, derived from the internal 1.1V bandgap reference.

© 2025 Microchip Technology Inc. and its subsidiaries

27.7.3. Average Control

Name: AVGCTRL
Offset: 0x02
Reset: 0x00
Property: Write-Protected

Table 27-9. Register Bit Attribute Legend

Symbol	Description	Symbol	Description	Symbol	Description
R	Readable bit	**HC**	Cleared by Hardware	(Grey cell)	Unimplemented
W	Writable bit	**HS**	Set by Hardware	**X**	Bit is unknown at Reset
K	Write to clear	**S**	Software settable bit	—	—

Bit	7	6	5	4	3	2	1	0
		ADJRES[2:0]			SAMPLENUM[3:0]			
Access		R/W	R/W	R/W	R/W	R/W	R/W	R/W
Reset		0	0	0	0	0	0	0

Bits 6:4 – ADJRES[2:0] Adjusting Result / Division Coefficient
These bits define the division coefficient in 2n steps.

Bits 3:0 – SAMPLENUM[3:0] Number of Samples to be Collected
These bits define how many samples should be added together.The result will be available in the Result register (RESULT). Note: if the result width increases, CTRLB.RESSEL must be changed.

SAMPLENUM[3:0]	Name	Description
0x0	1	1 sample
0x1	2	2 samples
0x2	4	4 samples
0x3	8	8 samples
0x4	16	16 samples
0x5	32	32 samples
0x6	64	64 samples
0x7	128	128 samples
0x8	256	256 samples
0x9	512	512 samples
0xA	1024	1024 samples
0xB-0xF		Reserved

© 2025 Microchip Technology Inc. and its subsidiaries

27.7.4. Sampling Time Control

Name: SAMPCTRL
Offset: 0x03
Reset: 0x00
Property: Write-Protected

Table 27-10. Register Bit Attribute Legend

Symbol	Description	Symbol	Description	Symbol	Description
R	Readable bit	**HC**	Cleared by Hardware	(Grey cell)	Unimplemented
W	Writable bit	**HS**	Set by Hardware	**X**	Bit is unknown at Reset
K	Write to clear	**S**	Software settable bit	—	—

Bit	7	6	5	4	3	2	1	0
			SAMPLEN[5:0]					
Access			R/W	R/W	R/W	R/W	R/W	R/W
Reset			0	0	0	0	0	0

Bits 5:0 – SAMPLEN[5:0] Sampling Time Length
These bits control the ADC sampling time in number of half CLK_ADC cycles, depending of the prescaler value, thus controlling the ADC input impedance. Sampling time is set according to the equation:

$$\text{Sampling time} = (\text{SAMPLEN}+1) \cdot \left(\frac{\text{CLK}_{\text{ADC}}}{2}\right)$$

© 2025 Microchip Technology Inc. and its subsidiaries

27.7.5. Control B

Name: CTRLB
Offset: 0x04
Reset: 0x0000
Property: Write-Protected, Write-Synchronized

Table 27-11. Register Bit Attribute Legend

Symbol	Description	Symbol	Description	Symbol	Description
R	Readable bit	**HC**	Cleared by Hardware	(Grey cell)	Unimplemented
W	Writable bit	**HS**	Set by Hardware	**X**	Bit is unknown at Reset
K	Write to clear	**S**	Software settable bit	—	—

Bit	15	14	13	12	11	10	9	8
						PRESCALER[2:0]		
Access						R/W	R/W	R/W
Reset						0	0	0

Bit	7	6	5	4	3	2	1	0
			RESSEL[1:0]		CORREN	FREERUN	LEFTADJ	DIFFMODE
Access			R/W	R/W	R/W	R/W	R/W	R/W
Reset			0	0	0	0	0	0

Bits 10:8 – PRESCALER[2:0] Prescaler Configuration
These bits define the ADC clock relative to the peripheral clock.

PRESCALER[2:0]	Name	Description
0x0	DIV4	Peripheral clock divided by 4
0x1	DIV8	Peripheral clock divided by 8
0x2	DIV16	Peripheral clock divided by 16
0x3	DIV32	Peripheral clock divided by 32
0x4	DIV64	Peripheral clock divided by 64
0x5	DIV128	Peripheral clock divided by 128
0x6	DIV256	Peripheral clock divided by 256
0x7	DIV512	Peripheral clock divided by 512

Bits 5:4 – RESSEL[1:0] Conversion Result Resolution
These bits define whether the ADC completes the conversion at 12-, 10- or 8-bit result resolution.

RESSEL[1:0]	Name	Description
0x0	12BIT	12-bit result
0x1	16BIT	For averaging mode output
0x2	10BIT	10-bit result
0x3	8BIT	8-bit result

Bit 3 – CORREN Digital Correction Logic Enabled

Value	Description
0	Disable the digital result correction.
1	Enable the digital result correction. The ADC conversion result in the RESULT register is then corrected for gain and offset based on the values in the GAINCAL and OFFSETCAL registers. Conversion time will be increased by X cycles according to the value in the Offset Correction Value bit group in the Offset Correction register.

Bit 2 – FREERUN Free Running Mode

© 2025 Microchip Technology Inc. and its subsidiaries

Value	Description
0	The ADC run is Single Conversion mode.
1	The ADC is in Free-running mode and a new conversion will be initiated when a previous conversion completes.

Bit 1 – LEFTADJ Left-Adjusted Result

Value	Description
0	The ADC conversion result is right-adjusted in the RESULT register.
1	The ADC conversion result is left-adjusted in the RESULT register. The high byte of the 12-bit result will be present in the upper part of the result register. Writing this bit to zero (default) will right-adjust the value in the RESULT register.

Bit 0 – DIFFMODE Differential Mode

Value	Description
0	The ADC is running in Singled-ended mode.
1	The ADC is running in Differential mode. In this mode, the voltage difference between the MUXPOS and MUXNEG inputs will be converted by the ADC.

© 2025 Microchip Technology Inc. and its subsidiaries

27.7.6. Window Monitor Control

Name: WINCTRL
Offset: 0x08
Reset: 0x00
Property: Write-Protected, Write-Synchronized

Table 27-12. Register Bit Attribute Legend

Symbol	Description	Symbol	Description	Symbol	Description
R	Readable bit	**HC**	Cleared by Hardware	(Grey cell)	Unimplemented
W	Writable bit	**HS**	Set by Hardware	**X**	Bit is unknown at Reset
K	Write to clear	**S**	Software settable bit	—	—

Bit	7	6	5	4	3	2	1	0
						WINMODE[2:0]		
Access						R/W	R/W	R/W
Reset						0	0	0

Bits 2:0 – WINMODE[2:0] Window Monitor Mode
These bits enable and define the window monitor mode.

WINMODE[2:0]	Name	Description
0x0	DISABLE	No window mode (default)
0x1	MODE1	Mode 1: RESULT > WINLT
0x2	MODE2	Mode 2: RESULT < WINUT
0x3	MODE3	Mode 3: WINLT < RESULT < WINUT
0x4	MODE4	Mode 4: !(WINLT < RESULT < WINUT)
0x5-0x7		Reserved

© 2025 Microchip Technology Inc. and its subsidiaries

27.7.7. Software Trigger

Name: SWTRIG
Offset: 0x0C
Reset: 0x00
Property: Write-Protected, Write-Synchronized

Table 27-13. Register Bit Attribute Legend

Symbol	Description	Symbol	Description	Symbol	Description
R	Readable bit	**HC**	Cleared by Hardware	(Grey cell)	Unimplemented
W	Writable bit	**HS**	Set by Hardware	**X**	Bit is unknown at Reset
K	Write to clear	**S**	Software settable bit	—	—

Bit	7	6	5	4	3	2	1	0
							START	FLUSH
Access							R/W	R/W
Reset							0	0

Bit 1 – START ADC Start Conversion
Writing this bit to zero will have no effect.

Value	Description
0	The ADC will not start a conversion.
1	The ADC will start a conversion. The bit is cleared by hardware when the conversion has started. Setting this bit when it is already set has no effect.

Bit 0 – FLUSH ADC Conversion Flush
After the flush, the ADC will resume where it left off. For example, if a conversion was pending, the ADC will start a new conversion.
Writing this bit to zero will have no effect.

Value	Description
0	No flush action.
1	"Writing a '1' to this bit will flush the ADC pipeline. A flush will restart the ADC clock on the next peripheral clock edge, and all conversions in progress will be aborted and lost. This bit will be cleared after the ADC has been flushed. After the flush, the ADC will resume where it left off. For example, if a conversion was pending, the ADC will start a new conversion.

© 2025 Microchip Technology Inc. and its subsidiaries

27.7.8. Input Control

Name: INPUTCTRL
Offset: 0x10
Reset: 0x00000000
Property: Write-Protected, Write-Synchronized

Table 27-14. Register Bit Attribute Legend

Symbol	Description	Symbol	Description	Symbol	Description
R	Readable bit	**HC**	Cleared by Hardware	(Grey cell)	Unimplemented
W	Writable bit	**HS**	Set by Hardware	**X**	Bit is unknown at Reset
K	Write to clear	**S**	Software settable bit	—	—

Bit	31	30	29	28	27	26	25	24
					GAIN[3:0]			
Access					R/W	R/W	R/W	R/W
Reset					0	0	0	0

Bit	23	22	21	20	19	18	17	16
	INPUTOFFSET[3:0]				INPUTSCAN[3:0]			
Access	R/W	R/W	R/W	R/W	R/W	R/W	R/W	R/W
Reset	0	0	0	0	0	0	0	0

Bit	15	14	13	12	11	10	9	8
				MUXNEG[4:0]				
Access				R/W	R/W	R/W	R/W	R/W
Reset				0	0	0	0	0

Bit	7	6	5	4	3	2	1	0
				MUXPOS[4:0]				
Access				R/W	R/W	R/W	R/W	R/W
Reset				0	0	0	0	0

Bits 27:24 – GAIN[3:0] Gain Factor Selection
These bits set the gain factor of the ADC gain stage.

GAIN[3:0]	Name	Description
0x0	1X	1x
0x1	2X	2x
0x2	4X	4x
0x3	8X	8x
0x4	16X	16x
0x5-0xE	-	Reserved
0xF	DIV2	1/2x

Bits 23:20 – INPUTOFFSET[3:0] Positive Mux Setting Offset
The pin scan is enabled when INPUTSCAN != 0. Writing these bits to a value other than zero causes the first conversion triggered to be converted using a positive input equal to MUXPOS + INPUTOFFSET. Setting this register to zero causes the first conversion to use a positive input equal to MUXPOS.
After a conversion, the INPUTOFFSET register will be incremented by one, causing the next conversion to be done with the positive input equal to MUXPOS + INPUTOFFSET. The sum of MUXPOS and INPUTOFFSET gives the input that is actually converted.

© 2025 Microchip Technology Inc. and its subsidiaries

Bits 19:16 – INPUTSCAN[3:0] Number of Input Channels Included in Scan

This register gives the number of input sources included in the pin scan. The number of input sources included is INPUTSCAN + 1. The input channels included are in the range from MUXPOS + INPUTOFFSET to MUXPOS + INPUTOFFSET + INPUTSCAN.

The range of the scan mode must not exceed the number of input channels available on the device.

Bits 12:8 – MUXNEG[4:0] Negative Mux Input Selection

These bits define the Mux selection for the negative ADC input selections.

Value	Name	Description
0x00	PIN0	ADC AIN0 pin
0x01	PIN1	ADC AIN1 pin
0x02	PIN2	ADC AIN2 pin
0x03	PIN3	ADC AIN3 pin
0x04	PIN4	ADC AIN4 pin
0x05	PIN5	ADC AIN5 pin
0x06	PIN6	ADC AIN6 pin
0x07	PIN7	ADC AIN7 pin
0x08-0x17	-	Reserved
0x18	GND	Internal ground
0x19	IOGND	I/O ground
0x1A-0x1F	-	Reserved

Bits 4:0 – MUXPOS[4:0] Positive Mux Input Selection

These bits define the Mux selection for the positive ADC input. The following table shows the possible input selections. If the internal bandgap voltage or temperature sensor input channel is selected, then the Sampling Time Length bit group in the SamplingControl register must be written.

MUXPOS[4:0]	Group configuration	Description
0x00	PIN0	ADC AIN0 pin
0x01	PIN1	ADC AIN1 pin
0x02	PIN2	ADC AIN2 pin
0x03	PIN3	ADC AIN3 pin
0x04	PIN4	ADC AIN4 pin
0x05	PIN5	ADC AIN5 pin
0x06	PIN6	ADC AIN6 pin
0x07	PIN7	ADC AIN7 pin
0x08	PIN8	ADC AIN8 pin
0x09	PIN9	ADC AIN9 pin
0x0A	PIN10	ADC AIN10 pin
0x0B	PIN11	ADC AIN11 pin
0x0C	PIN12	ADC AIN12 pin
0x0D	PIN13	ADC AIN13 pin
0x0E	PIN14	ADC AIN14 pin
0x0F	PIN15	ADC AIN15 pin
0x10	PIN16	ADC AIN16 pin
0x11	PIN17	ADC AIN17 pin
0x12	PIN18	ADC AIN18 pin
0x13	PIN19	ADC AIN19 pin
0x14-0x17		Reserved
0x18	TEMP	Temperature reference
0x19	BANDGAP	Bandgap voltage
0x1A	SCALEDCOREVCC	1/4 scaled core supply
0x1B	SCALEDIOVCC	1/4 scaled I/O supply
0x1C	DAC	DAC output
0x1D-0x1F		Reserved

© 2025 Microchip Technology Inc. and its subsidiaries

27.7.9. Event Control

Name: EVCTRL
Offset: 0x14
Reset: 0x00
Property: Write-Protected

Table 27-15. Register Bit Attribute Legend

Symbol	Description	Symbol	Description	Symbol	Description
R	Readable bit	**HC**	Cleared by Hardware	(Grey cell)	Unimplemented
W	Writable bit	**HS**	Set by Hardware	**X**	Bit is unknown at Reset
K	Write to clear	**S**	Software settable bit	—	—

Bit	7	6	5	4	3	2	1	0
			WINMONEO	RESRDYEO			SYNCEI	STARTEI
Access			R/W	R/W			R/W	R/W
Reset			0	0			0	0

Bit 5 – WINMONEO Window Monitor Event Out
This bit indicates whether the Window Monitor event output is enabled or not and an output event will be generated when the window monitor detects something.

Value	Description
0	Window Monitor event output is disabled and an event will not be generated.
1	Window Monitor event output is enabled and an event will be generated.

Bit 4 – RESRDYEO Result Ready Event Out
This bit indicates whether the Result Ready event output is enabled or not and an output event will be generated when the conversion result is available.

Value	Description
0	Result Ready event output is disabled and an event will not be generated.
1	Result Ready event output is enabled and an event will be generated.

Bit 1 – SYNCEI Synchronization Event In

Value	Description
0	A flush and new conversion will not be triggered on any incoming event.
1	A flush and new conversion will be triggered on any incoming event.

Bit 0 – STARTEI Start Conversion Event In

Value	Description
0	A new conversion will not be triggered on any incoming event.
1	A new conversion will be triggered on any incoming event.

© 2025 Microchip Technology Inc. and its subsidiaries

27.7.10. Interrupt Enable Clear

Name: INTENCLR
Offset: 0x16
Reset: 0x00
Property: Write-Protected

Table 27-16. Register Bit Attribute Legend

Symbol	Description	Symbol	Description	Symbol	Description
R	Readable bit	**HC**	Cleared by Hardware	(Grey cell)	Unimplemented
W	Writable bit	**HS**	Set by Hardware	**X**	Bit is unknown at Reset
K	Write to clear	**S**	Software settable bit	—	—

Bit	7	6	5	4	3	2	1	0
					SYNCRDY	WINMON	OVERRUN	RESRDY
Access					R/W	R/W	R/W	R/W
Reset					0	0	0	0

Bit 3 – SYNCRDY Synchronization Ready Interrupt Enable
Writing a zero to this bit has no effect.
Writing a one to this bit will clear the Synchronization Ready Interrupt Enable bit and the corresponding interrupt request.

Value	Description
0	The Synchronization Ready interrupt is disabled.
1	The Synchronization Ready interrupt is enabled, and an interrupt request will be generated when the Synchronization Ready interrupt flag is set.

Bit 2 – WINMON Window Monitor Interrupt Enable
Writing a zero to this bit has no effect.
Writing a one to this bit will clear the Window Monitor Interrupt Enable bit and the corresponding interrupt request.

Value	Description
0	The window monitor interrupt is disabled.
1	The window monitor interrupt is enabled, and an interrupt request will be generated when the Window Monitor interrupt flag is set.

Bit 1 – OVERRUN Overrun Interrupt Enable
Writing a zero to this bit has no effect.
Writing a one to this bit will clear the Overrun Interrupt Enable bit and the corresponding interrupt request.

Value	Description
0	The Overrun interrupt is disabled.
1	The Overrun interrupt is enabled, and an interrupt request will be generated when the Overrun interrupt flag is set.

Bit 0 – RESRDY Result Ready Interrupt Enable
Writing a zero to this bit has no effect.
Writing a one to this bit will clear the Result Ready Interrupt Enable bit and the corresponding interrupt request.

Value	Description
0	The Result Ready interrupt is disabled.

© 2025 Microchip Technology Inc. and its subsidiaries

Value	Description
1	The Result Ready interrupt is enabled, and an interrupt request will be generated when the Result Ready interrupt flag is set.

© 2025 Microchip Technology Inc. and its subsidiaries

27.7.11. Interrupt Enable Set

Name: INTENSET
Offset: 0x17
Reset: 0x00
Property: Write-Protected

Table 27-17. Register Bit Attribute Legend

Symbol	Description	Symbol	Description	Symbol	Description
R	Readable bit	**HC**	Cleared by Hardware	(Grey cell)	Unimplemented
W	Writable bit	**HS**	Set by Hardware	**X**	Bit is unknown at Reset
K	Write to clear	**S**	Software settable bit	—	—

Bit	7	6	5	4	3	2	1	0
					SYNCRDY	WINMON	OVERRUN	RESRDY
Access					R/W	R/W	R/W	R/W
Reset					0	0	0	0

Bit 3 – SYNCRDY Synchronization Ready Interrupt Enable
Writing a zero to this bit has no effect.
Writing a one to this bit will set the Synchronization Ready Interrupt Enable bit, which enables the Synchronization Ready interrupt.

Value	Description
0	The Synchronization Ready interrupt is disabled.
1	The Synchronization Ready interrupt is enabled.

Bit 2 – WINMON Window Monitor Interrupt Enable
Writing a zero to this bit has no effect.
Writing a one to this bit will set the Window Monitor Interrupt bit and enable the Window Monitor interrupt.

Value	Description
0	The Window Monitor interrupt is disabled.
1	The Window Monitor interrupt is enabled.

Bit 1 – OVERRUN Overrun Interrupt Enable
Writing a zero to this bit has no effect.
Writing a one to this bit will set the Overrun Interrupt bit and enable the Overrun interrupt.

Value	Description
0	The Overrun interrupt is disabled.
1	The Overrun interrupt is enabled.

Bit 0 – RESRDY Result Ready Interrupt Enable
Writing a zero to this bit has no effect.
Writing a one to this bit will set the Result Ready Interrupt bit and enable the Result Ready interrupt.

Value	Description
0	The Result Ready interrupt is disabled.
1	The Result Ready interrupt is enabled.

© 2025 Microchip Technology Inc. and its subsidiaries

27.7.12. Interrupt Flag Status and Clear

Name: INTFLAG
Offset: 0x18
Reset: 0x00
Property: -

Table 27-18. Register Bit Attribute Legend

Symbol	Description	Symbol	Description	Symbol	Description
R	Readable bit	**HC**	Cleared by Hardware	(Grey cell)	Unimplemented
W	Writable bit	**HS**	Set by Hardware	**X**	Bit is unknown at Reset
K	Write to clear	**S**	Software settable bit	—	—

Bit	7	6	5	4	3	2	1	0
					SYNCRDY	WINMON	OVERRUN	RESRDY
Access					R/W	R/W	R/W	R/W
Reset					0	0	0	0

Bit 3 – SYNCRDY Synchronization Ready
This flag is cleared by writing a one to the flag.
This flag is set on a one-to-zero transition of the Synchronization Busy bit in the Status register (STATUS.SYNCBUSY), except when caused by an enable or software Reset, and will generate an interrupt request if INTENCLR/SET.SYNCRDY is one.
Writing a zero to this bit has no effect.
Writing a one to this bit clears the Synchronization Ready interrupt flag.

Bit 2 – WINMON Window Monitor
This flag is cleared by writing a one to the flag or by reading the RESULT register.
This flag is set on the next GCLK_ADC cycle after a match with the Window Monitor condition, and an interrupt request will be generated if INTENCLR/SET.WINMON is one.
Writing a zero to this bit has no effect.
Writing a one to this bit clears the Window Monitor Interrupt flag.

Bit 1 – OVERRUN Overrun
This flag is cleared by writing a one to the flag.
This flag is set if RESULT is written before the previous value has been read by CPU, and an interrupt request will be generated if INTENCLR/SET.OVERRUN is one.
Writing a zero to this bit has no effect.
Writing a one to this bit clears the Overrun Interrupt flag.

Bit 0 – RESRDY Result Ready
This flag is cleared by writing a one to the flag or by reading the RESULT register.
This flag is set when the conversion result is available, and an interrupt will be generated if INTENCLR/SET.RESRDY is one.
Writing a zero to this bit has no effect.
Writing a one to this bit clears the Result Ready Interrupt flag.

© 2025 Microchip Technology Inc. and its subsidiaries

27.7.13. Status

Name: STATUS
Offset: 0x19
Reset: 0x00
Property: -

Table 27-19. Register Bit Attribute Legend

Symbol	Description	Symbol	Description	Symbol	Description
R	Readable bit	**HC**	Cleared by Hardware	(Grey cell)	Unimplemented
W	Writable bit	**HS**	Set by Hardware	**X**	Bit is unknown at Reset
K	Write to clear	**S**	Software settable bit	—	—

Bit	7	6	5	4	3	2	1	0
	SYNCBUSY							
Access	R							
Reset	0							

Bit 7 – SYNCBUSY Synchronization Busy
This bit is cleared when the synchronization of registers between the clock domains is complete.
This bit is set when the synchronization of registers between clock domains is started.

© 2025 Microchip Technology Inc. and its subsidiaries

27.7.14. Result

Name: RESULT
Offset: 0x1A
Reset: 0x0000
Property: Read-Synchronized

Table 27-20. Register Bit Attribute Legend

Symbol	Description	Symbol	Description	Symbol	Description
R	Readable bit	**HC**	Cleared by Hardware	(Grey cell)	Unimplemented
W	Writable bit	**HS**	Set by Hardware	**X**	Bit is unknown at Reset
K	Write to clear	**S**	Software settable bit	—	—

Bit	15	14	13	12	11	10	9	8
	RESULT[15:8]							
Access	R	R	R	R	R	R	R	R
Reset	0	0	0	0	0	0	0	0

Bit	7	6	5	4	3	2	1	0
	RESULT[7:0]							
Access	R	R	R	R	R	R	R	R
Reset	0	0	0	0	0	0	0	0

Bits 15:0 – RESULT[15:0] Result Conversion Value

These bits will hold up to a 16-bit ADC result, depending on the configuration.
In Single Conversion mode without averaging, the ADC conversion will produce a 12-bit result, which can be left- or right-shifted, depending on the setting of CTRLB.LEFTADJ.
If the result is left-adjusted (CTRLB.LEFTADJ), the high byte of the result will be in bit position [15:8], while the remaining 4 bits of the result will be placed in bit locations [7:4]. This can be used only if an 8-bit result is required. For example, one can read only the high byte of the entire 16-bit register.
If the result is not left-adjusted (CTRLB.LEFTADJ) and no oversampling is used, the result will be available in bit locations [11:0], and the result is then 12 bits long.
If oversampling is used, the result will be located in bit locations [15:0], depending on the settings of the Average Control register (AVGCTRL).

© 2025 Microchip Technology Inc. and its subsidiaries

27.7.15. Window Monitor Lower Threshold

Name: WINLT
Offset: 0x1C
Reset: 0x0000
Property: Write-Protected, Write-Synchronized

Table 27-21. Register Bit Attribute Legend

Symbol	Description	Symbol	Description	Symbol	Description
R	Readable bit	**HC**	Cleared by Hardware	(Grey cell)	Unimplemented
W	Writable bit	**HS**	Set by Hardware	**X**	Bit is unknown at Reset
K	Write to clear	**S**	Software settable bit	—	—

Bit	15	14	13	12	11	10	9	8
	WINLT[15:8]							
Access	R/W	R/W	R/W	R/W	R/W	R/W	R/W	R/W
Reset	0	0	0	0	0	0	0	0

Bit	7	6	5	4	3	2	1	0
	WINLT[7:0]							
Access	R/W	R/W	R/W	R/W	R/W	R/W	R/W	R/W
Reset	0	0	0	0	0	0	0	0

Bits 15:0 – WINLT[15:0] Window Lower Threshold
If the window monitor is enabled, these bits define the lower threshold value.

© 2025 Microchip Technology Inc. and its subsidiaries

27.7.16. Window Monitor Upper Threshold

Name: WINUT
Offset: 0x20
Reset: 0x0000
Property: Write-Protected, Write-Synchronized

Table 27-22. Register Bit Attribute Legend

Symbol	Description	Symbol	Description	Symbol	Description
R	Readable bit	**HC**	Cleared by Hardware	(Grey cell)	Unimplemented
W	Writable bit	**HS**	Set by Hardware	**X**	Bit is unknown at Reset
K	Write to clear	**S**	Software settable bit	—	—

Bit	15	14	13	12	11	10	9	8
	WINUT[15:8]							
Access	R/W	R/W	R/W	R/W	R/W	R/W	R/W	R/W
Reset	0	0	0	0	0	0	0	0

Bit	7	6	5	4	3	2	1	0
	WINUT[7:0]							
Access	R/W	R/W	R/W	R/W	R/W	R/W	R/W	R/W
Reset	0	0	0	0	0	0	0	0

Bits 15:0 – WINUT[15:0] Window Upper Threshold
If the window monitor is enabled, these bits define the upper threshold value.

© 2025 Microchip Technology Inc. and its subsidiaries

27.7.17. Gain Correction

Name: GAINCORR
Offset: 0x24
Reset: 0x0000
Property: Write-Protected

Table 27-23. Register Bit Attribute Legend

Symbol	Description	Symbol	Description	Symbol	Description
R	Readable bit	**HC**	Cleared by Hardware	(Grey cell)	Unimplemented
W	Writable bit	**HS**	Set by Hardware	**X**	Bit is unknown at Reset
K	Write to clear	**S**	Software settable bit	—	—

Bit	15	14	13	12	11	10	9	8
					GAINCORR[11:8]			
Access					R/W	R/W	R/W	R/W
Reset					0	0	0	0

Bit	7	6	5	4	3	2	1	0
	GAINCORR[7:0]							
Access	R/W	R/W	R/W	R/W	R/W	R/W	R/W	R/W
Reset	0	0	0	0	0	0	0	0

Bits 11:0 – GAINCORR[11:0] Gain Correction Value
If the CTRLB.CORREN bit is one, these bits define how the ADC conversion result is compensated for gain error before being written to the result register. The gain-correction is a fractional value, a 1-bit integer plusan 11-bit fraction, and therefore 1/2 <= GAINCORR < 2. GAINCORR values range from 0.10000000000 to 1.11111111111.

© 2025 Microchip Technology Inc. and its subsidiaries

27.7.18. Offset Correction

Name: OFFSETCORR
Offset: 0x26
Reset: 0x0000
Property: Write-Protected

Table 27-24. Register Bit Attribute Legend

Symbol	Description	Symbol	Description	Symbol	Description
R	Readable bit	**HC**	Cleared by Hardware	(Grey cell)	Unimplemented
W	Writable bit	**HS**	Set by Hardware	**X**	Bit is unknown at Reset
K	Write to clear	**S**	Software settable bit	—	—

Bit	15	14	13	12	11	10	9	8
					OFFSETCORR[11:8]			
Access					R/W	R/W	R/W	R/W
Reset					0	0	0	0

Bit	7	6	5	4	3	2	1	0
	OFFSETCORR[7:0]							
Access	R/W	R/W	R/W	R/W	R/W	R/W	R/W	R/W
Reset	0	0	0	0	0	0	0	0

Bits 11:0 – OFFSETCORR[11:0] Offset Correction Value
If the CTRLB.CORREN bit is one, these bits define how the ADC conversion result is compensated for offset error before being written to the Result register. This OFFSETCORR value is in two's complement format.

© 2025 Microchip Technology Inc. and its subsidiaries

27.7.19. Calibration

Name: CALIB
Offset: 0x28
Reset: 0x0000
Property: Write-Protected

Table 27-25. Register Bit Attribute Legend

Symbol	Description	Symbol	Description	Symbol	Description
R	Readable bit	**HC**	Cleared by Hardware	(Grey cell)	Unimplemented
W	Writable bit	**HS**	Set by Hardware	**X**	Bit is unknown at Reset
K	Write to clear	**S**	Software settable bit	—	—

Bit	15	14	13	12	11	10	9	8
						BIAS_CAL[2:0]		
Access						R/W	R/W	R/W
Reset						0	0	0

Bit	7	6	5	4	3	2	1	0
	LINEARITY_CAL[7:0]							
Access	R/W	R/W	R/W	R/W	R/W	R/W	R/W	R/W
Reset	0	0	0	0	0	0	0	0

Bits 10:8 – BIAS_CAL[2:0] Bias Calibration Value
This value from production test must be loaded from the NVM software calibration row into the CALIB register by software to allow the conversion and achieve the specified accuracy.
The copied value must not be modified.

Bits 7:0 – LINEARITY_CAL[7:0] Linearity Calibration Value
This value from production test must be loaded from the NVM software calibration row into the CALIB register by software to allow the conversion and achieve the specified accuracy.
The copied value must not be modified.

© 2025 Microchip Technology Inc. and its subsidiaries

27.7.20. Debug Control

Name: DBGCTRL
Offset: 0x2A
Reset: 0x00
Property: Write-Protected

Table 27-26. Register Bit Attribute Legend

Symbol	Description	Symbol	Description	Symbol	Description
R	Readable bit	**HC**	Cleared by Hardware	(Grey cell)	Unimplemented
W	Writable bit	**HS**	Set by Hardware	**X**	Bit is unknown at Reset
K	Write to clear	**S**	Software settable bit	—	—

Bit	7	6	5	4	3	2	1	0
								DBGRUN
Access								R/W
Reset								0

Bit 0 – DBGRUN Debug Run
This bit can be changed only while the ADC is disabled.
This bit should be written only while a conversion is not ongoing.

Value	Description
0	The ADC is halted during Debug mode.
1	The ADC continues normal operation during Debug mode.

© 2025 Microchip Technology Inc. and its subsidiaries

28. AC – Analog Comparators

28.1. Overview

The Analog Comparator (AC) supports two individual comparators. Each comparator (COMP) compares the voltage levels on two inputs, and provides a digital output based on this comparison. Each comparator may be configured to generate interrupt requests and peripheral events upon several different combinations of input change.

Hysteresis can be adjusted to achieve the optimal operation for each application.

The input selection includes four shared analog port pins and several internal signals. Each comparator output state can also be output on a pin for use by external devices.

The comparators are grouped in pairs on each port. The AC peripheral implements one pair of comparators. These are called Comparator 0 (COMP0) and Comparator 1 (COMP1) They have identical behaviors, but separate control registers. The pair can be set in window mode to compare a signal to a voltage range instead of a single voltage level.

28.2. Features

The following are key features of the AC module:

- Up to Two individual comparators
- Analog comparator outputs available on pins
  - Asynchronous or synchronous
- Flexible input selection:
  - Four pins selectable for positive or negative inputs
  - Ground (for zero crossing)
  - Bandgap reference voltage
  - 64-level programmable AVDD scaler per comparator
  - DAC0
- Interrupt generation on:
  - Rising or falling edge
  - Toggle
  - End of comparison
- Window function interrupt generation on:
  - Signal above window
  - Signal inside window
  - Signal below window
  - Signal outside window
- Event generation on:
  - Comparator output
  - Window function inside/outside window
- Optional digital filter on comparator output

© 2025 Microchip Technology Inc. and its subsidiaries

28.3. Block Diagram

Figure 28-1. Analog Comparator Block Diagram

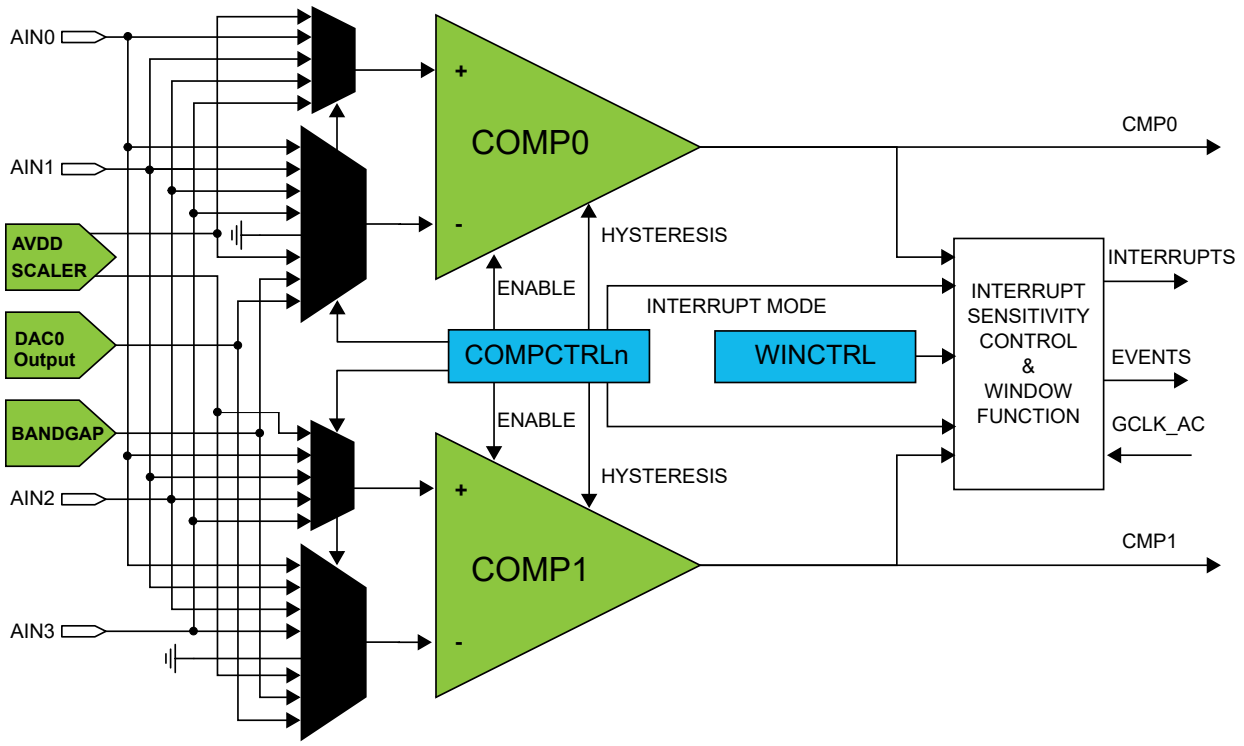

28.4. Signal Description

Signal	Description	Type
AIN[3..0]	Analog input	Comparator inputs
CMP[1..0]	Digital output	Comparator outputs

Refer to *I/O Multiplexing and Considerations* for details on the pin mapping for this peripheral. One signal can be mapped on several pins.

28.5. Peripheral Dependencies

Table 28-1. Peripherals Configuration Summary

Peripheral Name	Base Address	IRQ Line	AHB Clock		APB Clock		Generic Clock	PAC		Events		
			Index	Enabled at Reset	Index	Enabled at Reset	Index	Index	Prot at Reset	User	Generator	SleepWalking
AC	0x42004400	22			17	N	24: DIG 25: ANA	17	N	10-11: COMP0-1	54-55: COMP0-1 56: WIN0	Y

28.5.1. I/O Lines

Using the AC's I/O lines requires the I/O pins to be configured. Refer to *PORT - I/O Pin Controller* for details.

28.5.2. Power Management

The AC will continue to operate in any sleep mode where the selected source clock is running. The AC's interrupts can be used to wake-up the device from Standby Sleep mode. Events connected to the Event System can trigger other operations in the system without exiting Standby Sleep mode.

© 2025 Microchip Technology Inc. and its subsidiaries

28.5.3. Clocks

The AC bus clock (CLK_AC_APB) can be enabled and disabled in the Main Clock module, MCLK (see *MCLK - Main Clock*), and the default state of CLK_AC_APB can be found in *Peripheral Clock Masking*.

Two generic clocks (GCLK_AC_DIG and GCLK_AC_ANA) are used by the AC. The digital clock (GCLK_AC_DIG) is required to provide the sampling rate for the comparators, while the analog clock (GCLK_AC_ANA) is required for low voltage operation (AVDD < 2.5V) to ensure that the resistance of the analog input multiplexors remains low. These clocks must be configured and enabled in the generic clock controller before using the peripheral.

This generic clock is asynchronous to the bus clock (CLK_AC_APB). Due to this asynchronicity, writes to certain registers will require synchronization between the clock domains. Refer to Synchronization for further details.

28.5.4. DMA

Not applicable.

28.5.5. Interrupts

The interrupt request lines are connected to the interrupt controller. Using the AC interrupts requires the interrupt controller to be configured first. Refer to *Nested Vector Interrupt Controller* for details.

28.5.6. Events

The events are connected to the Event System. Refer to *EVSYS – Event System* for details on how to configure the Event System.

28.5.7. Debug Operation

When the CPU is halted in Debug mode, this peripheral will continue normal operation. If the peripheral is configured to require periodical service by the CPU through interrupts or similar, improper operation or data loss may result during debugging. This peripheral can be forced to halt operation during debugging.

28.5.8. Register Access Protection

All registers with write access can be write-protected optionally by the Peripheral Access Controller (PAC), except for the following registers:

- Control B register (CTRLB)
- Interrupt Flag register (INTFLAG)

Optional write protection by the Peripheral Access Controller (PAC) is denoted by the "PAC Write Protection" property in each individual register description.

PAC write protection does not apply to accesses through an external debugger.

28.5.9. Analog Connections

Each comparator has up to four I/O pins that can be used as analog inputs. Each pair of comparators shares the same four pins. These pins must be configured for analog operation before using them as comparator inputs.

Any internal reference source, such as a INTREF voltage reference, supplied by the bandgap, or DAC must be configured and enabled prior to its use as a comparator input.

© 2025 Microchip Technology Inc. and its subsidiaries

28.6. Functional Description

28.6.1. Principle of Operation

Each comparator has one positive input and one negative input. Each positive input may be chosen from a selection of analog input pins. Each negative input may be chosen from a selection of both analog input pins and internal inputs, such as bandgap voltage reference.

The digital output from the comparator is ‘1’ when the difference between the positive and the negative input voltage is positive, and ‘0’otherwise.

The individual comparators can be used independently (Normal mode) or paired to form a window comparison (Window mode).

28.6.2. Basic Operation

28.6.2.1. Initialization

Before enabling the AC, the input and output events must be configured in the Event Control register (EVCTRL). These settings cannot be changed while the AC is enabled.

28.6.2.2. Enabling, Disabling and Resetting

The AC is enabled by writing a '1' to the Enable bit in the Control A register (CTRLA.ENABLE). The AC is disabled writing a '0' to CTRLA.ENABLE.

The AC is reset by writing a '1' to the Software Reset bit in the Control A register (CTRLA.SWRST). All registers in the AC will be reset to their initial state, and the AC will be disabled. Refer to *CTRLA* for details.

The individual comparators must be also enabled by writing a '1' to the Enable bit in the Comparator x Control registers (COMPCTRLx.ENABLE). However, when the AC is disabled, this will also disable the individual comparators, but will not clear their COMPCTRLx.ENABLE bits.

28.6.2.3. Comparator Configuration

Each individual comparator must be configured by its respective Comparator Control register (COMPCTRLx) before that comparator is enabled. These settings cannot be changed while the comparator is enabled.

- Select the desired measurement mode with COMPCTRLx.SINGLE. See Starting a Comparison for more details.
- Select the desired hysteresis with COMPCTRLx.HYSTEN. See Input Hysteresis for more details.
- Select the comparator speed versus power with COMPCTRLx.SPEED. See Propagation Delay vs. Power Consumption for more details.
- Select the interrupt source with COMPCTRLx.INTSEL.
- Select the positive and negative input sources with the COMPCTRLx.MUXPOS and COMPCTRLx.MUXNEG bits. See Selecting Comparator Inputs for more details.
- Select the filtering option with COMPCTRLx.FLEN.
- Select standby operation with Run in Standby bit (COMPCTRLx.RUNSTDBY).

The individual comparators are enabled by writing a '1' to the Enable bit in the Comparator x Control registers (COMPCTRLx.ENABLE). The individual comparators are disabled by writing a '0' to COMPCTRLx.ENABLE. Writing a '0' to CTRLA.ENABLE will also disable all the comparators, but will not clear their COMPCTRLx.ENABLE bits.

28.6.2.4. Starting a Comparison

Each comparator channel can be in one of two different measurement modes, determined by the COMPCTRLx.SINGLE bit:

© 2025 Microchip Technology Inc. and its subsidiaries

- Continuous measurement
- Single-shot

After being enabled, a start-up delay is required before the result of the comparison is ready. This start-up time is measured automatically to account for environmental changes, such as temperature or voltage supply level, and is specified in the *Electrical Characteristics* chapters. During the start-up time, the COMP output is not available.

The comparator can be configured to generate interrupts when the output toggles, when the output changes from '0' to '1' (rising edge), when the output changes from '1' to '0' (falling edge) or at the end of the comparison. An end-of-comparison interrupt can be used with the Single-Shot mode to chain further events in the system, regardless of the state of the comparator outputs. The Interrupt mode is set by the Interrupt Selection bit group in the Comparator Control register (COMPCTRLx.INTSEL). Events are generated using the comparator output state, regardless of whether the interrupt is enabled or not.

28.6.2.4.1. Continuous Measurement

Continuous measurement is selected by writing COMPCTRLx.SINGLE to zero. In Continuous mode, the comparator is continuously enabled and performing comparisons. This ensures that the result of the latest comparison is always available in the Current State bit in the Status A register (STATUSA.STATEx).

After the start-up time has passed, a comparison is done and STATUSA is updated. The Comparator x Ready bit in the Status B register (STATUSB.READYx) is set, and the appropriate peripheral events and interrupts are also generated. New comparisons are performed continuously until the COMPCTRLx.ENABLE bit is written to zero. The start-up time applies only to the first comparison.

In continuous operation, edge detection of the comparator output for interrupts is done by comparing the current and previous sample. The sampling rate is the CLK_AC_DIG frequency. An example of continuous measurement is shown in the next figure.

Figure 28-2. Continuous Measurement Example

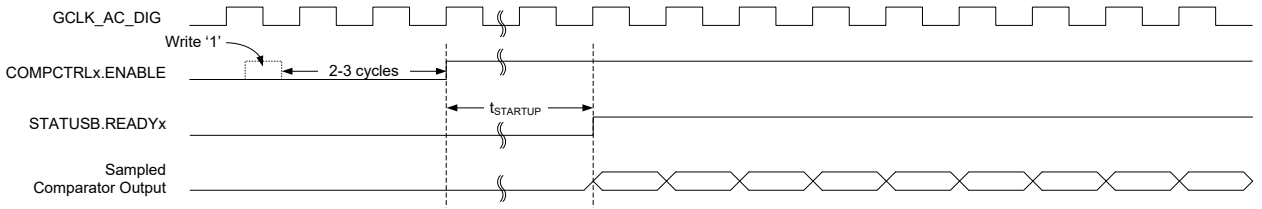

For low-power operation, comparisons can be performed during Sleep modes without a clock. The comparator is enabled continuously and changes of the comparator state are detected asynchronously. When a toggle occurs, the power manager will start CLK_AC_DIG to register the appropriate peripheral events and interrupts. The CLK_AC_DIG clock is then disabled again automatically, unless configured to wake up the system from sleep.

28.6.2.4.2. Single-Shot

Single-shot operation is selected by writing COMPCTRLx.SINGLE to '1'. During single-shot operation, the comparator is normally idle. The user starts a single comparison by writing '1' to the respective Start Comparison bit in the write-only Control B register (CTRLB.STARTx). The comparator is enabled, and after the start-up time has passed, a single comparison is done and STATUSA is updated. Appropriate peripheral events and interrupts are also generated. No new comparisons will be performed.

Writing '1' to CTRLB.STARTx also clears the Comparator x Ready bit in the Status B register (STATUSB.READYx). STATUSB.READYx is set automatically by hardware when the single comparison has completed.

© 2025 Microchip Technology Inc. and its subsidiaries

To remove the need for polling, an additional means of starting the comparison is also available. A read of the Status C register (STATUSC) will start a comparison on all comparators currently configured for single-shot operation. The read will stall the bus until all enabled comparators are ready. If a comparator is already busy with a comparison, the read will stall until the current comparison is compete, and a new comparison will not be started.

A single-shot measurement can also be triggered by the Event System. Setting the Comparator x Event Input bit in the Event Control Register (EVCTRL.COMPEIx) enables triggering on incoming peripheral events. Each comparator can be triggered independently by separate events. Event-triggered operation is similar to user-triggered operation; the difference is that a peripheral event from another hardware module causes the hardware to automatically start the comparison and clear STATUSB.READYx.

To detect an edge of the comparator output in single-shot operation for the purpose of interrupts, the result of the current measurement is compared with the result of the previous measurement (one sampling period earlier). An example of single-shot operation is shown in the figure below.

Figure 28-3. Single-Shot Example

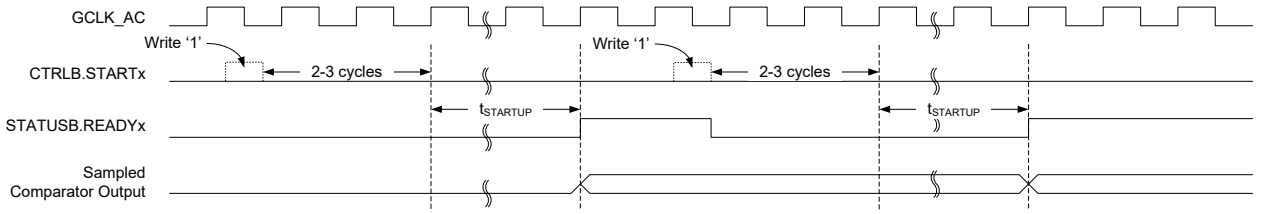

For low-power operation, event-triggered measurements can be performed during Sleep modes. When the event occurs, the power manager will start CLK_AC_DIG. The comparator is enabled, and after the start-up time has passed, a comparison is done and appropriate peripheral events and interrupts are generated. The comparator and CLK_AC_DIG are then disabled again automatically, unless configured to wake up the system from sleep.

28.6.3. Selecting Comparator Inputs

Each comparator has one positive and one negative input. The positive input is one of the external input pins (AINx). The negative input can be fed either from an external input pin (AINx) or from one of the several internal reference voltage sources common to all comparators. The user selects the input source as follows:

- The positive input is selected by the Positive Input MUX Select bit group in the Comparator Control register (COMPCTRLx.MUXPOS)
- The negative input is selected by the Negative Input MUX Select bit group in the Comparator Control register (COMPCTRLx.MUXNEG)

In the case of using an external I/O pin, the selected pin must be configured for analog use in the PORT Controller by disabling the digital input and output. The switching of the analog input multiplexers is controlled to minimize crosstalk between the channels. The input selection must be changed only while the individual comparator is disabled.

Note: For internal use of the comparison results by the CCL, this bit must be 0x1 or 0x2.

28.6.4. Window Operation

Each comparator pair can be configured to work together in Window mode. In this mode, a voltage range is defined, and the comparators give information about whether an input signal is within this range or not. Window mode is enabled by the Window Enable x bit in the Window Control register (WINCTRL.WENx). Both comparators in a pair must have the same measurement mode setting in their respective Comparator Control Registers (COMPCTRLx.SINGLE).

© 2025 Microchip Technology Inc. and its subsidiaries

To physically configure the pair of comparators for Window mode, the same I/O pin must be chosen as positive input for each comparator, providing a shared input signal. The negative inputs define the range for the window. In Figure 28-4, COMP0 defines the upper limit and COMP1 defines the lower limit of the window, as shown but the window will also work in the opposite configuration with COMP0 lower and COMP1 higher. The current state of the window function is available in the Window x State bit group of the Status register (STATUSA.WSTATEx).

Window mode can be configured to generate interrupts when the input voltage reaches values below the window, above the window, inside the window or outside of the window. The interrupt selections are set by the Window Interrupt Selection bit field in the Window Control register (WINCTRL.WINTSEL). Events are generated using the inside/outside state of the window, regardless of whether the interrupt is enabled or not. Note that the individual comparator outputs, interrupts and events continue to function normally during Window mode.

When the comparators are configured for Window mode and Single-shot mode, measurements are performed simultaneously on both comparators. Writing '1' to either Start Comparison bit in the Control B register (CTRLB.STARTx) will start a measurement. Likewise either peripheral event can start a measurement.

Figure 28-4. Comparators in Window Mode

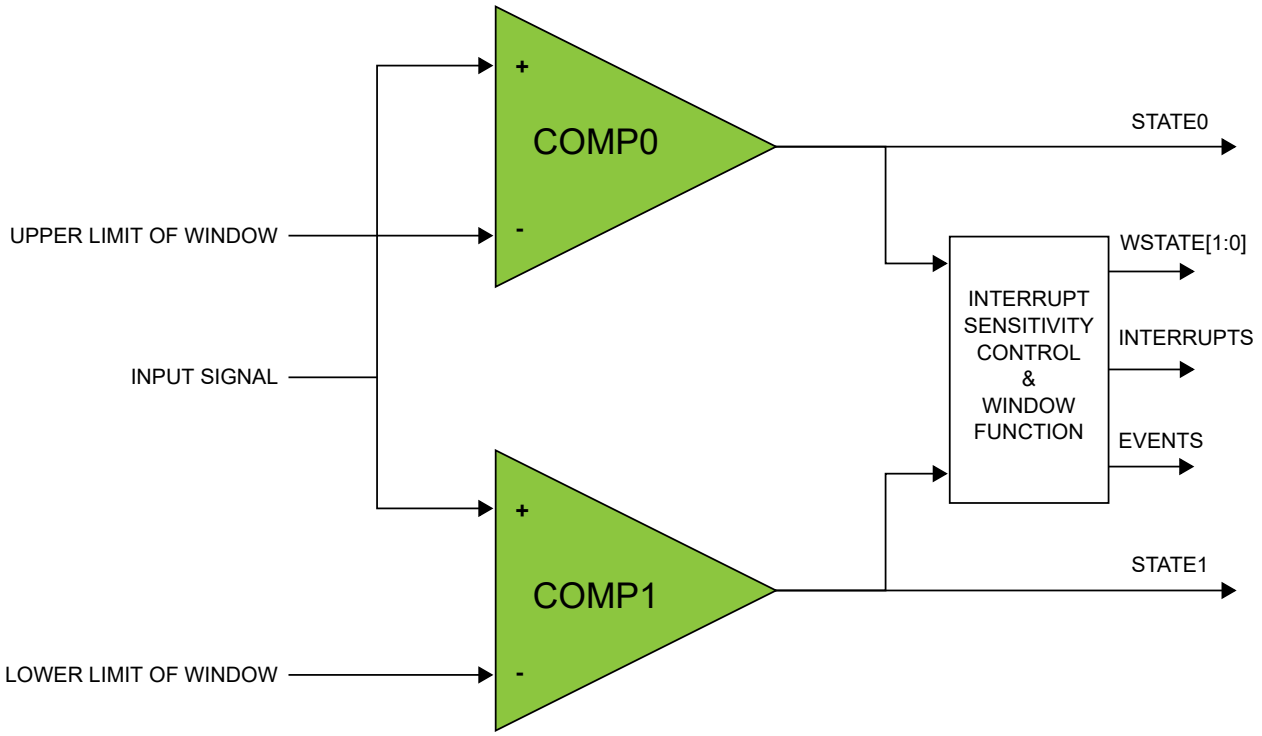

28.6.5. Voltage Doubler

The AC contains a voltage doubler that can reduce the resistance of the analog multiplexors when the supply voltage is below 2.5V. The voltage doubler is normally switched on/off automatically based on the supply level. When enabling the comparators, additional start-up time is required for the voltage doubler to settle. If the supply voltage is ensured to be above 2.5V, the voltage doubler can be disabled by writing the Low-Power Mux bit in the Control A register (CTRLA.LPMUX) to one. Disabling the voltage doubler saves power and reduces the start-up time.

28.6.6. AVDD Scaler

The AVDD scaler generates a reference voltage that is a fraction of the device's supply voltage with 64 levels. One independent voltage channel is dedicated for each comparator. The scaler of a

© 2025 Microchip Technology Inc. and its subsidiaries

comparator is enabled when the Negative Input Mux bit field in the respective Comparator Control register (COMPCTRLx.MUXNEG) is set to 0x5 and the comparator is enabled. The voltage of each channel is selected by the Value bit field in the Scaler x registers (SCALERx.VALUE).

Figure 28-5. AVDD Scaler

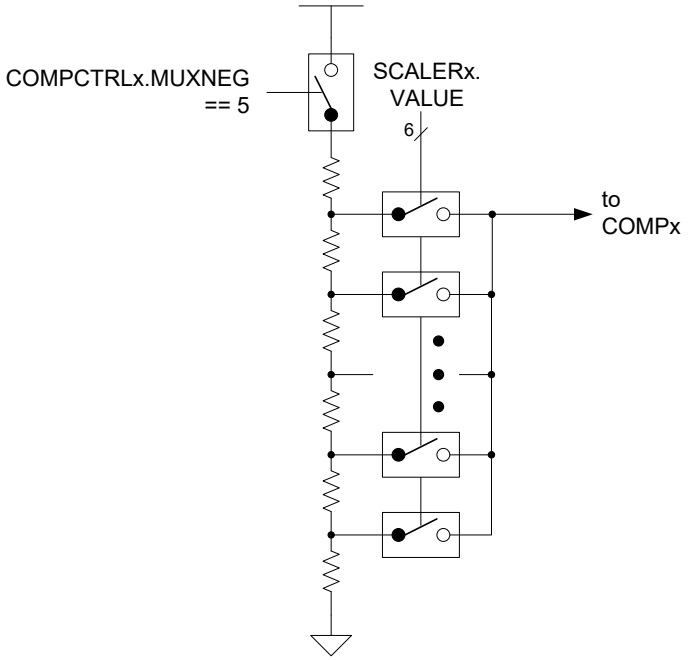

28.6.7. Input Hysteresis

Application software can selectively enable/disable hysteresis for the comparison. Applying hysteresis will help prevent constant toggling of the output, which can be caused by noise when the input signals are close to each other.

Hysteresis is enabled for each comparator individually by the Hysteresis Enable bit in the Comparator x Control register (COMPCTRLx.HYSTEN). Hysteresis is available only in Continuous mode (COMPCTRLx.SINGLE=0).

28.6.8. Propagation Delay vs. Power Consumption

It is possible to trade off comparison speed for power efficiency to get the shortest possible propagation delay or the lowest power consumption. The speed setting is configured for each comparator individually by the Speed bit group in the Comparator x Control register (COMPCTRLx.SPEED). The Speed bits select the amount of bias current provided to the comparator, and as such will also affect the start-up time.

28.6.9. Filtering

The output of the comparators can be filtered digitally to reduce noise. The filtering is determined by the Filter Length bits in the Comparator Control x register (COMPCTRLx.FLEN), and is independent for each comparator. Filtering is selectable from none, 3-bit majority (N=3) or 5-bit majority (N=5) functions. Any change in the comparator output is considered valid only if N/2+1 out of the last N samples agree. The filter sampling rate is the GCLK_AC frequency.

Note that filtering creates an additional delay of N-1 sampling cycles from when a comparison is started until the comparator output is validated. For Continuous mode, the first valid output will occur when the required number of filter samples is taken. Subsequent outputs will be generated every cycle based on the current sample plus the previous N-1 samples, as shown in Figure 28-6. For Single-shot mode, the comparison completes after the Nth filter sample, as shown in Figure 28-7.

© 2025 Microchip Technology Inc. and its subsidiaries

Figure 28-6. Continuous Mode Filtering

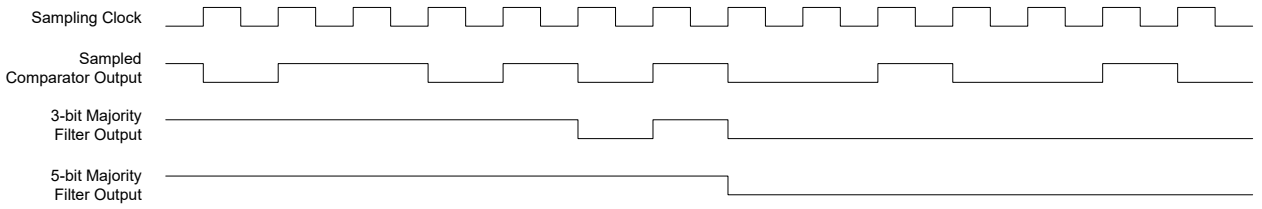

Figure 28-7. Single-Shot Filtering

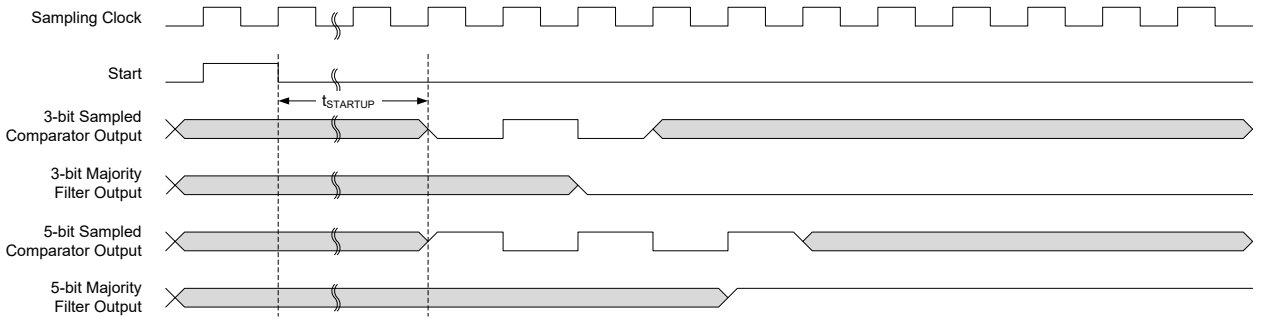

During Sleep modes, filtering is supported only for single-shot measurements. Filtering must be disabled if continuous measurements will be done during Sleep modes, or the resulting interrupt/event may be generated incorrectly.

28.6.10. Comparator Output

The output of each comparator can be routed to an I/O pin by setting the Output bit group in the Comparator Control x register (COMPCTRLx.OUT). This allows the comparator to be used by external circuitry. Either the raw, non-synchronized output of the comparator or the CLK_AC-synchronized version, including filtering, can be used as the I/O signal source. The output appears on the corresponding CMP[x] pin.

28.6.11. Offset Compensation

The Swap bit in the Comparator Control registers (COMPCTRLx.SWAP) controls switching of the input signals to a comparator's positive and negative terminals. When the comparator terminals are swapped, the output signal from the comparator is also inverted, as shown in Figure 28-8. This allows the user to measure or compensate for the comparator input offset voltage. As part of the input selection, COMPCTRLx.SWAP can be changed only while the comparator is disabled.

Figure 28-8. Input Swapping for Offset Compensation

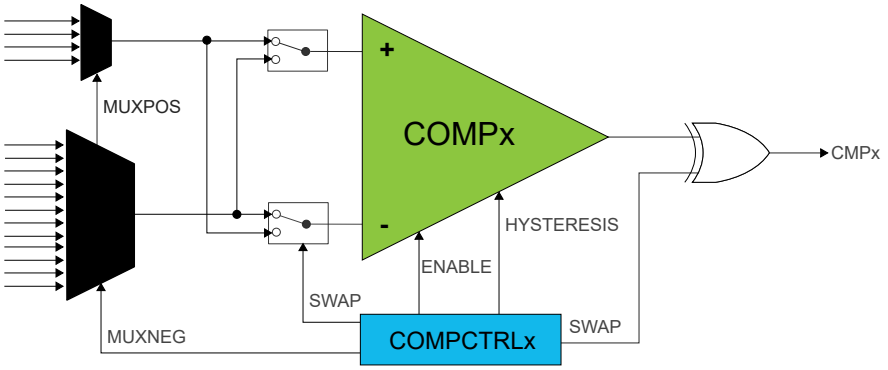

Note: The inputs are swapped only if the comparator inputs difference is within offset values.

© 2025 Microchip Technology Inc. and its subsidiaries

28.6.12. Interrupts

The AC has the following interrupt sources:

- Comparator (COMP0, COMP1): Indicates a change in comparator status.
- Window (WIN0): Indicates a change in the window status.

Comparator interrupts are generated based on the conditions selected by the Interrupt Selection bit group in the Comparator Control registers (COMPCTRLx.INTSEL). Window interrupts are generated based on the conditions selected by the Window Interrupt Selection bit group in the Window Control register (WINCTRL.WINTSEL[1:0]).

Each interrupt source has an interrupt flag associated with it. The interrupt flag in the Interrupt Flag Status and Clear (INTFLAG) register is set when the interrupt condition occurs. Each interrupt can be individually enabled by writing a one to the corresponding bit in the Interrupt Enable Set (INTENSET) register, and disabled by writing a one to the corresponding bit in the Interrupt Enable Clear (INTENCLR) register. The status of enabled interrupts can be read from either INTENSET or INTENCLR.

An interrupt request is generated when the interrupt flag is set and the corresponding interrupt is enabled. The interrupt request remains active until the interrupt flag is cleared, the interrupt is disabled, or the AC is Reset. See INTFLAG register for details on how to clear interrupt flags. All interrupt requests from the peripheral are ORed together on system level to generate one combined interrupt request to the NVIC. The user must read the INTFLAG register to determine which interrupt condition is present.

Note that interrupts must be globally enabled for interrupt requests to be generated.

28.6.13. Events

The AC can generate the following output events:

- Comparator (COMP0, COMP1): Generated as a copy of the comparator status
- Window (WIN0): Generated as a copy of the window inside/outside status

Output events must be enabled to be generated. Writing a one to an Event Output bit in the Event Control register (EVCTRL.COMPEOx) enables the corresponding output event. Writing a zero to this bit disables the corresponding output event. The events must be correctly routed in the Event System.

The AC can take the following action on an input event:

- Single-shot measurement
- Single-shot measurement in Window mode

Writing a one to an Event Input bit into the Event Control register (EVCTRL.COMPEIx) enables the corresponding action on input event. Writing a zero to this bit disables the corresponding action on input event. Note that if several events are connected to the AC, the enabled action will be taken on any of the incoming events. Refer to the Event System chapter for details on configuring the event system.

When EVCTRL.COMPEIx is one, the event will start a comparison on COMPx after the start-up time delay. In Normal mode, each comparator responds to its corresponding input event independently. For a pair of comparators in window mode, either comparator event will trigger a comparison on both comparators simultaneously.

28.6.14. Sleep Mode Operation

The Run in Standby bits in the Comparator x Control registers (COMPCTRLx.RUNSTDBY) control the behavior of the AC during standby sleep mode. Each RUNSTDBY bit controls one comparator. When the bit is zero, the comparator is disabled during sleep, but maintains its current configuration. When the bit is one, the comparator continues to operate during sleep. Note that when RUNSTDBY

© 2025 Microchip Technology Inc. and its subsidiaries

is zero, the analog blocks are powered off for the lowest power consumption. This necessitates a start-up time delay when the system returns from sleep.

When RUNSTDBY is one, any enabled AC interrupt source can wake up the CPU. While the CPU is sleeping, single-shot comparisons are only triggerable by events. The AC can also be used during Sleep modes where the clock used by the AC is disabled, provided that the AC is still powered (not in shutdown). In this case, the behavior is slightly different and depends on the Measurement mode.

Table 28-2. Sleep Mode Operation

COMPCTRLx.MODE	RUNSTDBY=0	RUNSTDBY=1
0 (Continuous)	COMPx disabled	GCLK_AC_DIG stopped, COMPx enabled
1 (Single-shot)	COMPx disabled	GCLK_AC_DIG stopped, COMPx enabled only when triggered by an input event

28.6.14.1. Continuous Measurement during Sleep

When a comparator is enabled in continuous measurement mode and GCLK_AC_DIG is disabled during sleep, the comparator will remain continuously enabled and will function asynchronously. The current state of the comparator is asynchronously monitored for changes. If an edge matching the interrupt condition is found, GCLK_AC_DIG is started to register the interrupt condition and generate events. If the interrupt is enabled in the Interrupt Enable registers (INTENCLR/SET), the AC can wake up the device; otherwise GCLK_AC_DIG is disabled until the next edge detection. Filtering is not possible with this configuration.

Figure 28-9. Continuous Mode SleepWalking

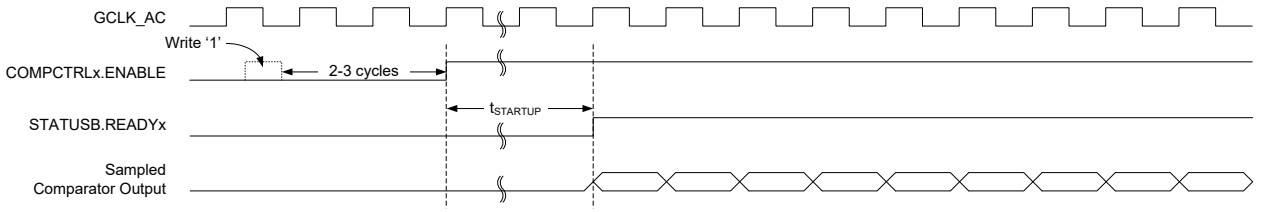

28.6.14.2. Single-Shot Measurement during Sleep

For low-power operation, event-triggered measurements can be performed during sleep modes. When the event occurs, the power manager will start GCLK_AC_DIG. The comparator is enabled, and after the start-up time has passed, a comparison is done, with filtering if desired, and the appropriate peripheral events and interrupts are also generated, as the figure below. The comparator and GCLK_AC_DIG are then disabled again automatically, unless configured to wake the system from sleep. Filtering is allowed with this configuration.

Figure 28-10. Single-Shot SleepWalking

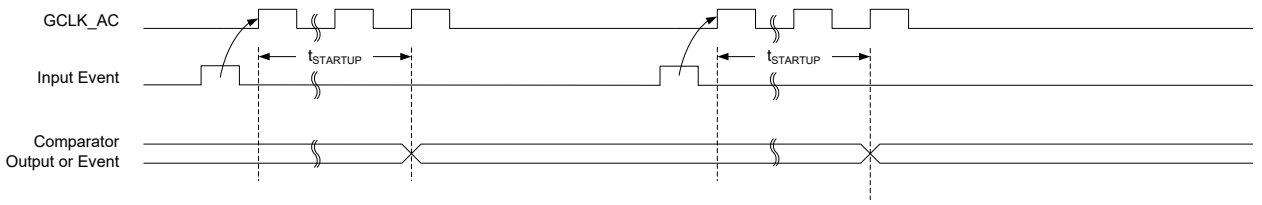

28.6.15. Synchronization

Due to asynchronicity between the main clock domain and the peripheral clock domains, some registers need to be synchronized when written or read.

The following bits are synchronized when written:

- Software Reset bit in Control register (CTRLA.SWRST)

© 2025 Microchip Technology Inc. and its subsidiaries

- Enable bit in Control register (CTRLA.ENABLE)
- Enable bit in Comparator Control register (COMPCTRLn.ENABLE)

The following registers are synchronized when written:

- Window Control register (WINCTRL)

Required write synchronization is denoted by the "Write-Synchronized" property in the register description.

© 2025 Microchip Technology Inc. and its subsidiaries

28.7. Register Summary

L variant devices have a second Analog Comparator, called AC1. (The registers for the first Analog Comparator (AC), start at memory offset 0x4200_4400. The registers for the AC1 start at memory offset 0x4200_5400.)

Offset	Name	Bit Pos.	7	6	5	4	3	2	1	0
0x00	CTRLA	7:0	LPMUX					RUNSTDBY	ENABLE	SWRST
0x01	CTRLB	7:0							STARTx	STARTx
0x02	EVCTRL	7:0				WINEO0			COMPEOx	COMPEOx
		15:8							COMPEIx	COMPEIx
0x04	INTENCLR	7:0				WIN0			COMPx	COMPx
0x05	INTENSET	7:0				WIN0			COMPx	COMPx
0x06	INTFLAG	7:0				WIN0			COMPx	COMPx
0x07	Reserved									
0x08	STATUSA	7:0			WSTATE0[1:0]				STATEx	STATEx
0x09	STATUSB	7:0	SYNCBUSY						READYx	READYx
0x0A	STATUSC	7:0			WSTATE0[1:0]				STATEx	STATEx
0x0B	Reserved									
0x0C	WINCTRL	7:0						WINTSEL0[1:0]		WEN0
0x0D ... 0x0F	Reserved									
0x10	COMPCTRL0	7:0		INTSEL[1:0]			SPEED[1:0]		SINGLE	ENABLE
		15:8	SWAP		MUXPOS[1:0]			MUXNEG[2:0]		
		23:16					HYST		OUT[1:0]	
		31:24						FLEN[2:0]		
0x14	COMPCTRL1	7:0		INTSEL[1:0]			SPEED[1:0]		SINGLE	ENABLE
		15:8	SWAP		MUXPOS[1:0]			MUXNEG[2:0]		
		23:16					HYST		OUT[1:0]	
		31:24						FLEN[2:0]		
0x18 ... 0x1F	Reserved									
0x20	SCALER0	7:0			VALUE[5:0]					
0x21	SCALER1	7:0			VALUE[5:0]					

© 2025 Microchip Technology Inc. and its subsidiaries

28.7.1. Control A

Name: CTRLA
Offset: 0x00
Reset: 0x00
Property: PAC Write-Protection, Write-Synchronized

Table 28-3. Register Bit Attribute Legend

Symbol	Description	Symbol	Description	Symbol	Description
R	Readable bit	**HC**	Cleared by Hardware	(Grey cell)	Unimplemented
W	Writable bit	**HS**	Set by Hardware	**X**	Bit is unknown at Reset
K	Write to clear	**S**	Software settable bit	—	—

Bit	7	6	5	4	3	2	1	0
	LPMUX					RUNSTDBY	ENABLE	SWRST
Access	R/W					R/W	R/W	R/W
Reset	0					0	0	0

Bit 7 – LPMUX Low-Power Mux
This bit is not synchronized

Value	Description
0	The analog input muxes have low resistance, but consume more power at lower voltages (e.g., are driven by the voltage doubler).
1	The analog input muxes have high resistance, but consume less power at lower voltages (e.g., the voltage doubler is disabled).

Bit 2 – RUNSTDBY Run in Standby
This bit controls the behavior of the comparators during Standby Sleep mode.
This bit is not synchronized

Value	Description
0	The comparator pair is disabled during sleep.
1	The comparator pair continues to operate during sleep.

Bit 1 – ENABLE Enable
Due to synchronization, there is a delay from the time when the register is updated until the peripheral is enabled/disabled. The value written to CTRL.ENABLE will read back immediately after being written. STATUS.SYNCBUSY is set. STATUS.SYNCBUSY is cleared when the peripheral is enabled/disabled

Value	Description
0	The AC is disabled.
1	The AC is enabled. Each comparator must also be enabled individually by the Enable bit in the Comparator Control register (COMPCTRLn.ENABLE).

Bit 0 – SWRST Software Reset
Writing a '0' to this bit has no effect.
Writing a '1' to this bit resets all registers in the AC to their initial state, and the AC will be disabled.
Writing a '1' to CTRLA.SWRST will always take precedence, meaning that all other writes in the same write-operation will be discarded.
Due to synchronization, there is a delay from writing CTRLA.SWRST until the Reset is complete. CTRLA.SWRST and STATUS.SYNCBUSY will both be cleared when the Reset is complete.

Value	Description
0	There is no Reset operation ongoing.

© 2025 Microchip Technology Inc. and its subsidiaries

Value	Description
1	The Reset operation is ongoing.

© 2025 Microchip Technology Inc. and its subsidiaries

28.7.2. Control B

Name: CTRLB
Offset: 0x01
Reset: 0x00
Property: –

Table 28-4. Register Bit Attribute Legend

Symbol	Description	Symbol	Description	Symbol	Description
R	Readable bit	**HC**	Cleared by Hardware	(Grey cell)	Unimplemented
W	Writable bit	**HS**	Set by Hardware	**X**	Bit is unknown at Reset
K	Write to clear	**S**	Software settable bit	—	—

Bit	7	6	5	4	3	2	1	0
							STARTx	STARTx
Access							R/W	R/W
Reset							0	0

Bits 1,0 – STARTx Comparator x Start Comparison
Writing a '0' to this field has no effect.
Writing a '1' to STARTx starts a single-shot comparison on COMPx if both the Single-Shot and Enable bits in the Comparator x Control Register are '1' (COMPCTRLx.SINGLE and COMPCTRLx.ENABLE). If comparator x is not implemented, or if it is not enabled in Single-shot mode, Writing a '1' has no effect.
This bit always reads as zero.

© 2025 Microchip Technology Inc. and its subsidiaries

28.7.3. Event Control

Name: EVCTRL
Offset: 0x02
Reset: 0x0000
Property: PAC Write-Protection, Enable-Protected

Table 28-5. Register Bit Attribute Legend

Symbol	Description	Symbol	Description	Symbol	Description
R	Readable bit	**HC**	Cleared by Hardware	(Grey cell)	Unimplemented
W	Writable bit	**HS**	Set by Hardware	**X**	Bit is unknown at Reset
K	Write to clear	**S**	Software settable bit	—	—

Bit	15	14	13	12	11	10	9	8
							COMPEIx	COMPEIx
Access							R/W	R/W
Reset							0	0

Bit	7	6	5	4	3	2	1	0
				WINEO0			COMPEOx	COMPEOx
Access				R/W			R/W	R/W
Reset				0			0	0

Bits 9,8 – COMPEIx Comparator x Event Input
Note that several actions can be enabled for incoming events. If several events are connected to the peripheral, the enabled action will be taken for any of the incoming events. There is no way to tell which of the incoming events caused the action.
These bits indicate whether a comparison will start or not on any incoming event.

Value	Description
0	Comparison will not start on any incoming event.
1	Comparison will start on any incoming event.

Bit 4 – WINEO0 Window 0 Event Output Enable
These bits indicate whether the window 0 function can generate a peripheral event or not.

Value	Description
0	Window 0 Event is disabled.
1	Window 0 Event is enabled.

Bits 1,0 – COMPEOx Comparator x Event Output Enable
These bits indicate whether the comparator x output can generate a peripheral event or not.

Value	Description
0	COMPx event generation is disabled.
1	COMPx event generation is enabled.

© 2025 Microchip Technology Inc. and its subsidiaries

28.7.4. Interrupt Enable Clear

Name: INTENCLR
Offset: 0x04
Reset: 0x00
Property: PAC Write-Protection

This register allows the user to disable an interrupt without doing a read-modify-write operation. Changes in this register will also be reflected in the Interrupt Enable Set register (INTENSET).

Table 28-6. Register Bit Attribute Legend

Symbol	Description	Symbol	Description	Symbol	Description
R	Readable bit	**HC**	Cleared by Hardware	(Grey cell)	Unimplemented
W	Writable bit	**HS**	Set by Hardware	**X**	Bit is unknown at Reset
K	Write to clear	**S**	Software settable bit	—	—

Bit	7	6	5	4	3	2	1	0
				WIN0			COMPx	COMPx
Access				R/W			R/W	R/W
Reset				0			0	0

Bit 4 – WIN0 Window 0 Interrupt Enable
Reading this bit returns the state of the Window 0 interrupt enable.
Writing a '0' to this bit has no effect.
Writing a '1' to this bit disables the Window 0 interrupt.

Value	Description
0	The Window 0 interrupt is disabled.
1	The Window 0 interrupt is enabled.

Bits 1,0 – COMPx Comparator x Interrupt Enable
Reading this bit returns the state of the Comparator x interrupt enable.
Writing a '0' to this bit has no effect.
Writing a '1' to this bit disables the Comparator x interrupt.

Value	Description
0	The Comparator x interrupt is disabled.
1	The Comparator x interrupt is enabled.

© 2025 Microchip Technology Inc. and its subsidiaries

28.7.5. Interrupt Enable Set

Name: INTENSET
Offset: 0x05
Reset: 0x00
Property: PAC Write-Protection

This register allows the user to enable an interrupt without doing a read-modify-write operation. Changes in this register will also be reflected in the Interrupt Enable Clear register (INTENCLR).

Table 28-7. Register Bit Attribute Legend

Symbol	Description	Symbol	Description	Symbol	Description
R	Readable bit	**HC**	Cleared by Hardware	(Grey cell)	Unimplemented
W	Writable bit	**HS**	Set by Hardware	**X**	Bit is unknown at Reset
K	Write to clear	**S**	Software settable bit	—	—

Bit	7	6	5	4	3	2	1	0
				WIN0			COMPx	COMPx
Access				R/W			R/W	R/W
Reset				0			0	0

Bit 4 – WIN0 Window 0 Interrupt Enable
Reading this bit returns the state of the Window 0 interrupt enable.
Writing a '0' to this bit has no effect.
Writing a '1' to this bit enables the Window 0 interrupt.

Value	Description
0	The Window 0 interrupt is disabled.
1	The Window 0 interrupt is enabled.

Bits 1,0 – COMPx Comparator x Interrupt Enable
Reading this bit returns the state of the Comparator x interrupt enable.
Writing a '0' to this bit has no effect.
Writing a '1' to this bit will set the Ready interrupt bit and enable the Ready interrupt.

Value	Description
0	The Comparator x interrupt is disabled.
1	The Comparator x interrupt is enabled.

© 2025 Microchip Technology Inc. and its subsidiaries

28.7.6. Interrupt Flag Status and Clear

Name: INTFLAG
Offset: 0x06
Reset: 0x00
Property: –

Table 28-8. Register Bit Attribute Legend

Symbol	Description	Symbol	Description	Symbol	Description
R	Readable bit	**HC**	Cleared by Hardware	(Grey cell)	Unimplemented
W	Writable bit	**HS**	Set by Hardware	**X**	Bit is unknown at Reset
K	Write to clear	**S**	Software settable bit	—	—

Bit	7	6	5	4	3	2	1	0
				WIN0			COMPx	COMPx
Access				R/W			R/W	R/W
Reset				0			0	0

Bit 4 – WIN0 Window 0
This flag is set according to the Window 0 Interrupt Selection bit group in the WINCTRL register (WINCTRL.WINTSELx) and will generate an interrupt if INTENCLR/SET.WINx is also one.
Writing a '0' to this bit has no effect.
Writing a '1' to this bit clears the Window 0 interrupt flag.

Bits 1,0 – COMPx Comparator x
Reading this bit returns the status of the Comparator x interrupt flag. If comparator x is not implemented, COMPx always reads as zero.
This flag is set according to the Interrupt Selection bit group in the Comparator x Control register (COMPCTRLx.INTSEL) and will generate an interrupt if INTENCLR/SET.COMPx is also one.
Writing a '0' to this bit has no effect.
Writing a '1' to this bit clears the Comparator x interrupt flag.

© 2025 Microchip Technology Inc. and its subsidiaries

28.7.7. Status A

Name: STATUSA
Offset: 0x08
Reset: 0x00
Property: –

Table 28-9. Register Bit Attribute Legend

Symbol	Description	Symbol	Description	Symbol	Description
R	Readable bit	**HC**	Cleared by Hardware	(Grey cell)	Unimplemented
W	Writable bit	**HS**	Set by Hardware	**X**	Bit is unknown at Reset
K	Write to clear	**S**	Software settable bit	—	—

Bit	7	6	5	4	3	2	1	0
			WSTATE0[1:0]				STATEx	STATEx
Access			R	R			R	R
Reset			0	0			0	0

Bits 5:4 – WSTATE0[1:0] Window 0 Current State
These bits show the current state of the signal if the window 0 mode is enabled.

Value	Name	Description
0x0	ABOVE	Signal is above window
0x1	INSIDE	Signal is inside window
0x2	BELOW	Signal is below window
0x3		Reserved

Bits 1,0 – STATEx Comparator x Current State
This bit shows the current state of the output signal from COMPx. STATEx is valid only when STATUSB.READYx is one.

© 2025 Microchip Technology Inc. and its subsidiaries

28.7.8. Status B

Name: STATUSB
Offset: 0x09
Reset: 0x00
Property: –

Table 28-10. Register Bit Attribute Legend

Symbol	Description	Symbol	Description	Symbol	Description
R	Readable bit	**HC**	Cleared by Hardware	(Grey cell)	Unimplemented
W	Writable bit	**HS**	Set by Hardware	**X**	Bit is unknown at Reset
K	Write to clear	**S**	Software settable bit	—	—

Bit	7	6	5	4	3	2	1	0
	SYNCBUSY						READYx	READYx
Access	R						R	R
Reset	0						0	0

Bit 7 – SYNCBUSY Synchronization Busy
This bit is cleared when the synchronization of registers between the clock domains is complete.
This bit is set when the synchronization of registers between clock domains is started.

Bits 1,0 – READYx Comparator x Ready
This bit is cleared when the comparator x output is not ready.
This bit is set when the comparator x output is ready.

© 2025 Microchip Technology Inc. and its subsidiaries

28.7.9. Status C

Name: STATUSC
Offset: 0x0A
Reset: 0x00
Property: –

STATUSC is a copy of STATUSA (see STATUSA register), with the additional feature of automatically starting single-shot comparisons. A read of STATUSC will start a comparison on all comparators currently configured for single-shot operation. The read will stall the bus until all enabled comparators are ready. If a comparator is already busy with a comparison, the read will stall until the current comparison is compete, and a new comparison will not be started.

Table 28-11. Register Bit Attribute Legend

Symbol	Description	Symbol	Description	Symbol	Description
R	Readable bit	**HC**	Cleared by Hardware	(Grey cell)	Unimplemented
W	Writable bit	**HS**	Set by Hardware	**X**	Bit is unknown at Reset
K	Write to clear	**S**	Software settable bit	—	—

Bit	7	6	5	4	3	2	1	0
			WSTATE0[1:0]				STATEx	STATEx
Access			R	R			R	R
Reset			0	0			0	0

Bits 5:4 – WSTATE0[1:0] Window 0 Current State
These bits show the current state of the signal if the window 0 mode is enabled.

Value	Name	Description
0x0	ABOVE	Signal is above window
0x1	INSIDE	Signal is inside window
0x2	BELOW	Signal is below window
0x3		Reserved

Bits 1,0 – STATEx Comparator x Current State
This bit shows the current state of the output signal from COMPx. STATEx is valid only when STATUSB.READYx is one.

© 2025 Microchip Technology Inc. and its subsidiaries

28.7.10. Window Control

Name: WINCTRL
Offset: 0x0C
Reset: 0x00
Property: PAC Write-Protection, Write-Synchronized

Table 28-12. Register Bit Attribute Legend

Symbol	Description	Symbol	Description	Symbol	Description
R	Readable bit	**HC**	Cleared by Hardware	(Grey cell)	Unimplemented
W	Writable bit	**HS**	Set by Hardware	**X**	Bit is unknown at Reset
K	Write to clear	**S**	Software settable bit	—	—

Bit	7	6	5	4	3	2	1	0
						WINTSEL0[1:0]		WEN0
Access						R/W	R/W	R/W
Reset						0	0	0

Bits 2:1 – WINTSEL0[1:0] Window 0 Interrupt Selection
These bits configure the Interrupt mode for the Comparator Window 0 mode.

Value	Name	Description
0x0	ABOVE	Interrupt on signal above window
0x1	INSIDE	Interrupt on signal inside window
0x2	BELOW	Interrupt on signal below window
0x3	OUTSIDE	Interrupt on signal outside window

Bit 0 – WEN0 Window 0 Mode Enable

Value	Description
0	Window mode is disabled for comparators 0 and 1.
1	Window mode is enabled for comparators 0 and 1.

© 2025 Microchip Technology Inc. and its subsidiaries

28.7.11. Comparator Control n

Name: COMPCTRL
Offset: 0x10 + n*0x04 [n=0..1]
Reset: 0x00000000
Property: PAC Write-Protection, Write-Synchronized

Table 28-13. Register Bit Attribute Legend

Symbol	Description	Symbol	Description	Symbol	Description
R	Readable bit	**HC**	Cleared by Hardware	(Grey cell)	Unimplemented
W	Writable bit	**HS**	Set by Hardware	**X**	Bit is unknown at Reset
K	Write to clear	**S**	Software settable bit	—	—

Bit	31	30	29	28	27	26	25	24
						FLEN[2:0]		
Access						R/W	R/W	R/W
Reset						0	0	0

Bit	23	22	21	20	19	18	17	16
					HYST		OUT[1:0]	
Access					R/W		R/W	R/W
Reset					0		0	0

Bit	15	14	13	12	11	10	9	8
	SWAP		MUXPOS[1:0]			MUXNEG[2:0]		
Access	R/W		R/W	R/W		R/W	R/W	R/W
Reset	0		0	0		0	0	0

Bit	7	6	5	4	3	2	1	0
		INTSEL[1:0]			SPEED[1:0]		SINGLE	ENABLE
Access		R/W	R/W		R/W	R/W	R/W	R/W
Reset		0	0		0	0	0	0

Bits 26:24 – FLEN[2:0] Filter Length
These bits configure the filtering for comparator n. COMPCTRLn.FLEN can only be written while COMPCTRLn.ENABLE is zero.
These bits are not synchronized.

Value	Name	Description
0x0	OFF	No filtering
0x1	MAJ3	3-bit majority function (2 of 3)
0x2	MAJ5	5-bit majority function (3 of 5)
0x3-0x7	N/A	Reserved

Bit 19 – HYST Hysteresis Enable
This bit indicates the Hysteresis mode of comparator n. Hysteresis is available only for Continuous mode (COMPCTRLn. SINGLE=0). COMPCTRLn.HYST can be written only while COMPCTRLn.ENABLE is zero.
This bit is not synchronized.

Value	Name
0	Hysteresis is disabled.
1	Hysteresis is enabled.

© 2025 Microchip Technology Inc. and its subsidiaries

Bits 17:16 – OUT[1:0] Output

These bits configure the output selection for comparator n. COMPCTRLn.OUT can be written only while COMPCTRLn.ENABLE is zero.
These bits are not synchronized.

Value	Name	Description
0x0	OFF	The output of COMPn is not routed to the COMPn I/O port
0x1	ASYNC	The asynchronous output of COMPn is routed to the COMPn I/O port
0x2	SYNC	The synchronous output (including filtering) of COMPn is routed to the COMPn I/O port
0x3	N/A	Reserved

Bit 15 – SWAP Swap Inputs and Invert

This bit swaps the positive and negative inputs to COMPn and inverts the output. This function can be used for offset cancellation. COMPCTRLn.SWAP can be written only while COMPCTRLn.ENABLE is zero.
These bits are not synchronized.

Value	Description
0	The output of MUXPOS connects to the positive input, and the output of MUXNEG connects to the negative input.
1	The output of MUXNEG connects to the positive input, and the output of MUXPOS connects to the negative input.

Bits 13:12 – MUXPOS[1:0] Positive Input Mux Selection

These bits select which input will be connected to the positive input of comparator n. COMPCTRLn.MUXPOS can be written only while COMPCTRLn.ENABLE is zero.
These bits are not synchronized.

Value	Name	Description
0x0	PIN0	I/O pin 0
0x1	PIN1	I/O pin 1
0x2	PIN2	I/O pin 2
0x3	PIN3	I/O pin 3

Bits 10:8 – MUXNEG[2:0] Negative Input Mux Selection

These bits select which input will be connected to the negative input of comparator n. COMPCTRLn.MUXNEG can only be written while COMPCTRLn.ENABLE is zero.
These bits are not synchronized.

Value	Name	Description
0x0	PIN0	I/O pin 0
0x1	PIN1	I/O pin 1
0x2	PIN2	I/O pin 2
0x3	PIN3	I/O pin 3
0x4	GND	Ground
0x5	VSCALE	VDD scaler
0x6	BANDGAP	Internal bandgap voltage
0x7	DAC	DAC output

Bits 6:5 – INTSEL[1:0] Interrupt Selection

These bits select the condition for comparator n to generate an interrupt or event. COMPCTRLn.INTSEL can be written only while COMPCTRLn.ENABLE is zero.
These bits are not synchronized.

Value	Name	Description
0x0	TOGGLE	Interrupt on comparator output toggle
0x1	RISING	Interrupt on comparator output rising

© 2025 Microchip Technology Inc. and its subsidiaries

Value	Name	Description
0x2	FALLING	Interrupt on comparator output falling
0x3	EOC	Interrupt on end of comparison (single-shot mode only)

Bits 3:2 – SPEED[1:0] Speed Selection

This bit indicates the Speed/Propagation Delay mode of comparator n. COMPCTRLn.SPEED can be written only while COMPCTRLn.ENABLE is zero.
These bits are not synchronized.

Value	Name	Description
0x0	LOW	Low speed
0x1	HIGH	High speed
0x2-0x3	N/A	Reserved

Bit 1 – SINGLE Single-Shot Mode

This bit determines the operation of comparator n. COMPCTRLn.SINGLE can be written only while COMPCTRLn.ENABLE is zero.
These bits are not synchronized.

Value	Description
0	Comparator n operates in Continuous Measurement mode.
1	Comparator n operates in Single-shot mode.

Bit 0 – ENABLE Enable

Writing a zero to this bit disables comparator n.
Writing a one to this bit enables comparator n. After writing to this bit, the value read back will not change until the action initiated by the writing is complete.
Due to synchronization, there is a latency of at least two GCLK_AC_DIG clock cycles from updating the register until the comparator is enabled/disabled. The bit will continue to read the previous state while the change is in progress. Writing a one to COMPCTRLn.ENABLE will prevent further changes to the other bits in COMPCTRLn. These bits remain protected until COMPCTRLn.ENABLE is written to zero and the write is synchronized.

© 2025 Microchip Technology Inc. and its subsidiaries

28.7.12. Scaler n

Name: SCALER
Offset: 0x20 + n*0x01 [n=0..1]
Reset: 0x00
Property: PAC Write-Protection

Table 28-14. Register Bit Attribute Legend

Symbol	Description	Symbol	Description	Symbol	Description
R	Readable bit	**HC**	Cleared by Hardware	(Grey cell)	Unimplemented
W	Writable bit	**HS**	Set by Hardware	**X**	Bit is unknown at Reset
K	Write to clear	**S**	Software settable bit	—	—

Bit	7	6	5	4	3	2	1	0
			VALUE[5:0]					
Access			R/W	R/W	R/W	R/W	R/W	R/W
Reset			0	0	0	0	0	0

Bits 5:0 – VALUE[5:0] Scaler Value

These bits define the scaling factor for channel n of the V_{DD} voltage scaler. The output voltage, V_{SCALE}, is:

$$V_{\mathrm{SCALE}} = \frac{V_{\mathrm{DD}} \cdot (\mathrm{VALUE}+1)}{64}$$

© 2025 Microchip Technology Inc. and its subsidiaries

29. DAC – Digital-to-Analog Converter

29.1. Overview

The Digital-to-Analog Converter (DAC) converts a digital value to a voltage. The DAC has one channel with 10-bit resolution, and it is capable of converting up to 350,000 samples per second (350 ksps).

29.2. Features

- DAC with 10-bit Resolution
- Up to 350 ksps Conversion Rate
- Multiple Trigger Sources
- High-drive Capabilities
- Output can be used as Input to the Analog Comparator (AC)

29.3. Block Diagram

Figure 29-1. DAC Block Diagram

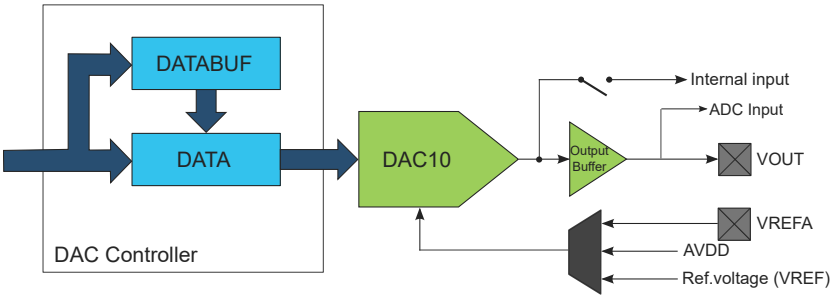

29.4. Signal Description

Signal Name	Type	Description
VOUT	Analog output	DAC output
VREFA	Analog input	External reference

CAUTION Only one analog output function can be used on the same pin.

29.5. Peripheral Dependencies

Table 29-1. Peripherals Configuration Summary

Peripheral Name	Base Address	IRQ Line	AHB Clock		APB Clock		Generic Clock	PAC		Events		
			Index	Enabled at Reset	Index	Enabled at Reset	Index	Index	Prot at Reset	User	Generator	SleepWalking
DAC	0x42004800	23			18	N	26	18	N	12: START	57: EMPTY	Y

29.5.1. I/O Lines

Using the DAC controller's I/O lines requires the I/O pins to be configured using the Port configuration (PORT).

29.5.2. Power Management

The DAC will continue to operate in any Sleep mode where the selected source clock is running.

The DAC interrupts can be used to wake up the device from Sleep modes.

© 2025 Microchip Technology Inc. and its subsidiaries

Events connected to the Event System can trigger other operations in the system without exiting Sleep modes.

29.5.3. Clocks

The DAC bus clock (CLK_DAC_APB) can be enabled and disabled by the power manager, and the default state of CLK_DAC_APB can be found in the *Peripheral Clock Masking* section.

A generic clock (GCLK_DAC) is required to clock the DAC controller. This clock must be configured and enabled in the generic clock controller before using the DAC controller. Refer to *GCLK – Generic Clock Controller* for details.

This generic clock is asynchronous to the bus clock (CLK_DAC_APB). Due to this asynchronicity, writes to certain registers will require synchronization between the clock domains. Refer to Synchronization for further details.

29.5.4. Interrupts

The interrupt request line is connected to the interrupt controller. Using the DAC Controller interrupt(s) requires the interrupt controller to be configured first.

29.5.5. Events

The events are connected to the Event System.

29.5.6. Debug Operation

When the CPU is halted in Debug mode the DAC will halt normal operation. Any ongoing conversions will be completed. The DAC can be forced to continue normal operation during debugging. If the DAC is configured in a way that requires it to be periodically serviced by the CPU through interrupts or similar, improper operation or data loss may result during debugging.

29.5.7. Register Access Protection

All registers with write access can be write-protected optionally by the Peripheral Access Controller (PAC), except the following registers:

- Interrupt Flag Status and Clear (INTFLAG) register
- Data Buffer (DATABUF) register

Optional write protection by the Peripheral Access Controller (PAC) is denoted by the "PAC Write Protection" property in each individual register description.

PAC write protection does not apply to accesses through an external debugger

29.5.8. Analog Connections

The DAC has one output pin (VOUT) and one analog input voltage reference pin (VREFA) that must be configured first.

When internal input is used, it must be enabled before DAC controller is enabled.

29.6. Functional Description

29.6.1. Principle of Operation

The DAC converts the digital value located in the Data register (DATA) into an analog voltage on the DAC output (VOUT).

A conversion is started when new data is written to the Data register. The resulting voltage is available on the DAC output after the conversion time. A conversion can also be started by input events from the Event System.

© 2025 Microchip Technology Inc. and its subsidiaries

29.6.2. Basic Operation

29.6.2.1. Initialization

The following registers are enable-protected, meaning they can only be written when the DAC is disabled (CTRLA.ENABLE is zero):

- Control B register (CTRLB)
- Event Control register (EVCTRL)

Enable-protection is denoted by the Enable-Protected property in the register description.

Before enabling the DAC, it must be configured by selecting the voltage reference using the Reference Selection bits in the Control B register (CTRLB.REFSEL).

29.6.2.2. Enabling, Disabling and Resetting

The DAC Controller is enabled by writing a '1' to the Enable bit in the Control A register (CTRLA.ENABLE). The DAC Controller is disabled by writing a '0' to CTRLA.ENABLE.

The DAC Controller is reset by writing a '1' to the Software Reset bit in the Control A register (CTRLA.SWRST). All registers in the DAC will be reset to their initial state, and the DAC Controller will be disabled. Refer to the CTRLA register for details.

29.6.2.3. Enabling the Output Buffer

To enable the DAC output on the V_{OUT} pin, the output driver must be enabled by writing a one to the External Output Enable bit in the Control B register (CTRLB.EOEN).

The DAC output buffer provides a high-drive-strength output, and is capable of driving both resistive and capacitive loads. To minimize power consumption, the output buffer should be enabled only when external output is needed.

29.6.2.4. Digital to Analog Conversion

The DAC converts a digital value (stored in the DATA register) into an analog voltage. The conversion range is between GND and the selected DAC voltage reference. The default voltage reference is the internal reference voltage. Other voltage reference options are the analog supply voltage (AVDD) and the external voltage reference (VREFA). The voltage reference is selected by writing to the Reference Selection bits in the Control B register (CTRLB.REFSEL).

The output voltage from the DAC can be calculated using the following formula:

$$V_{\mathrm{OUT}} = \frac{\mathrm{DATA}}{0x3\mathrm{FF}} \cdot \mathrm{VREF}$$

A new conversion starts as soon as a new value is loaded into DATA. DATA can either be loaded via the APB bus during a CPU write operation, or from the DATABUF register when a START event occurs. Refer to Events for details. As there is no automatic indication that a conversion is done, the sampling period must be greater than or equal to the specified conversion time.

29.6.3. Interrupts

The DAC Controller has the following interrupt sources:

- Data Buffer Empty (EMPTY): Indicates that the internal data buffer of the DAC is empty.
- Underrun (UNDERRUN): Indicates that the internal data buffer of the DAC is empty and a DAC start of conversion event occurred. This interrupt can only occur when events are used to start a conversion. Refer to Events for details.

Each interrupt source has an Interrupt flag associated with it. The Interrupt flag in the Interrupt Flag Status and Clear register (INTFLAG) is set when the Interrupt condition occurs. Each interrupt can be individually enabled by writing a one to the corresponding bit in the Interrupt Enable Set register (INTENSET), and disabled by writing a one to the corresponding bit in the Interrupt Enable Clear register (INTENCLR). The status of enabled interrupts can be read from either INTENSET or INTENCLR.

© 2025 Microchip Technology Inc. and its subsidiaries

An interrupt request is generated when the Interrupt flag is set and the corresponding interrupt is enabled. The interrupt request remains active until the Interrupt flag is cleared, the interrupt is disabled or the DAC is reset. See INTFLAG register for details on how to clear Interrupt flags.

All interrupt requests from the peripheral are ORed together on system level to generate one combined interrupt request to the NVIC. The user must read the INTFLAG register to determine which Interrupt condition is present.

Note that interrupts must be globally enabled for interrupt requests to be generated..

29.6.4. Events

The DAC Controller can generate the following output events:

- Data Buffer Empty (EMPTY): Generated when the internal data buffer of the DAC is empty. Refer to DMA Operation for details.

Writing a '1' to an Event Output bit in the Event Control register (EVCTRL.EMPTYEO) enables the corresponding output event. Writing a '0' to this bit disables the corresponding output event.

The DAC can take the following action on an input event:

- Start Conversion (START): DATABUF value is transferred into DATA as soon as the DAC is ready for the next conversion, and then conversion is started. START is considered as asynchronous to GCLK_DAC thus it is resynchronized in DAC Controller. Refer to Digital to Analog Conversion for details.
  Note: When a DAC Start Conversion event is enabled, only DATABUF must be written (not DATA).

Writing a '1' to an Event Input bit in the Event Control register (EVCTRL.STARTEI) enables the corresponding action on an input event. Writing a '0' to this bit disables the corresponding action on input event.

Note: When several events are connected to the DAC Controller, the enabled action will be taken on any of the incoming events.

By default, DAC Controller detects rising edge events. Falling edge detection can be enabled by writing a '1' to EVCTRL.INVEIx.

29.6.5. Sleep Mode Operation

The generic clock for the DAC is running in Idle Sleep mode. If the Run In Standby bit in the Control A register (CTRLA.RUNSTDBY) is one, the DAC output buffer will keep its value in Standby Sleep mode. If CTRLA.RUNSTDBY is zero, the DAC output buffer will be disabled in Standby Sleep mode.

29.6.6. Synchronization

Due to the asynchronicity between main clock domain and the peripheral clock domains, some registers need to be synchronized when written or read. A register can require:

- Synchronization when written
- Synchronization when read
- Synchronization when written and read
- No synchronization

When executing an operation that requires synchronization, the will be set immediately, and cleared when synchronization is complete.

If an operation that requires synchronization is executed while its busy bit is one, the operation is discarded and an error is generated.

The following bits need synchronization when written:

© 2025 Microchip Technology Inc. and its subsidiaries

- Software Reset bit in the Control A register (CTRLA.SWRST)
- Enable bit in the Control A register (CTRLA.ENABLE)
- All bits in the Data register (DATA)
- All bits in the Data Buffer register (DATABUF)

Write-synchronization is denoted by the Write-Synchronized property in the register description.

29.6.7. Additional Features

29.6.7.1. DAC as an Internal Reference

The DAC output can be internally enabled as input to the analog comparator. This is enabled by writing a one to the Internal Output Enable bit in the Control B register (CTRLB.IOEN). It is possible to have the internal and external output enabled simultaneously.

The DAC output can also be enabled as input to the Analog-to-Digital Converter. In this case, the output buffer must be enabled.

29.6.7.2. Data Buffer

The Data Buffer register (DATABUF) and the Data register (DATA) are linked together to form a two-stage FIFO. The DAC uses the Start Conversion event to load data from DATABUF into DATA and start a new conversion. The Start Conversion event is enabled by writing a one to the Start Event Input bit in the Event Control register (EVCTRL.STARTEI). If a Start Conversion event occurs when DATABUF is empty, an Underrun interrupt request is generated if the Underrun interrupt is enabled.

The DAC can generate a Data Buffer Empty event when DATABUF becomes empty and new data can be loaded to the buffer. The Data Buffer Empty event is enabled by writing a one to the Empty Event Output bit in the Event Control register (EVCTRL.EMPTYEO). A Data Buffer Empty interrupt request is generated if the Data Buffer Empty interrupt is enabled.

29.6.7.3. Voltage Pump

When the DAC is used at operating voltages lower than 2.5V, the voltage pump must be enabled. This enabling is done automatically, depending on operating voltage.

The voltage pump can be disabled by writing a one to the Voltage Pump Disable bit in the Control B register (CTRLB.VPD). This can be used to reduce power consumption when the operating voltage is above 2.5V.

The voltage pump uses the asynchronous GCLK_DAC clock, and requires that the clock frequency be at least four times higher than the sampling period.

© 2025 Microchip Technology Inc. and its subsidiaries

29.7. Register Summary

Offset	Name	Bit Pos.	7	6	5	4	3	2	1	0
0x00	CTRLA	7:0						RUNSTDBY	ENABLE	SWRST
0x01	CTRLB	7:0	REFSEL[1:0]				VPD	LEFTADJ	IOEN	EOEN
0x02	EVCTRL	7:0							EMPTYEO	STARTEI
0x03	Reserved									
0x04	INTENCLR	7:0						SYNCRDY	EMPTY	UNDERRUN
0x05	INTENSET	7:0						SYNCRDY	EMPTY	UNDERRUN
0x06	INTFLAG	7:0						SYNCRDY	EMPTY	UNDERRUN
0x07	STATUS	7:0	SYNCBUSY							
0x08	DATA	7:0	DATA[7:0]							
		15:8	DATA[15:8]							
0x0A ... 0x0B	Reserved									
0x0C	DATABUF	7:0	DATABUF[7:0]							
		15:8	DATABUF[15:8]							

© 2025 Microchip Technology Inc. and its subsidiaries

29.7.1. Control A

Name: CTRLA
Offset: 0x00
Reset: 0x00
Property: PAC Write-Protection, Write-Synchronized

Table 29-2. Register Bit Attribute Legend

Symbol	Description	Symbol	Description	Symbol	Description
R	Readable bit	**HC**	Cleared by Hardware	(Grey cell)	Unimplemented
W	Writable bit	**HS**	Set by Hardware	**X**	Bit is unknown at Reset
K	Write to clear	**S**	Software settable bit	—	—

Bit	7	6	5	4	3	2	1	0
						RUNSTDBY	ENABLE	SWRST
Access						R/W	R/W	R/W
Reset						0	0	0

Bit 2 – RUNSTDBY Run in Standby
This bit is not synchronized

Value	Description
0	The DAC output buffer is disabled in Standby Sleep mode.
1	The DAC output buffer can be enabled in Standby Sleep mode.

Bit 1 – ENABLE Enable DAC Controller
Due to synchronization there is delay from writing CTRLA.ENABLE until the peripheral is enabled/disabled. The value written to CTRLA.ENABLE will read back immediately and the corresponding bit in the Synchronization Busy register (SYNCBUSY.ENABLE) will be set. SYNCBUSY.ENABLE will be cleared when the operation is complete.

Value	Description
0	The peripheral is disabled or being disabled.
1	The peripheral is enabled or being enabled.

Bit 0 – SWRST Software Reset
Writing '0' to this bit has no effect.
Writing '1' to this bit resets all registers in the DAC to their initial state, and the DAC will be disabled. Writing a '1' to CTRLA.SWRST will always take precedence, meaning that all other writes in the same write-operation will be discarded.
Due to synchronization there is a delay from writing CTRLA.SWRST until the reset is complete. CTRLA.SWRST and SYNCBUSY.SWRST will both be cleared when the reset is complete.

Value	Description
0	There is no reset operation ongoing.
1	The reset operation is ongoing.

© 2025 Microchip Technology Inc. and its subsidiaries

29.7.2. Control B

Name: CTRLB
Offset: 0x01
Reset: 0x00
Property: PAC Write-Protection, Enable-Protected

Table 29-3. Register Bit Attribute Legend

Symbol	Description	Symbol	Description	Symbol	Description
R	Readable bit	**HC**	Cleared by Hardware	(Grey cell)	Unimplemented
W	Writable bit	**HS**	Set by Hardware	**X**	Bit is unknown at Reset
K	Write to clear	**S**	Software settable bit	—	—

Bit	7	6	5	4	3	2	1	0
	REFSEL[1:0]				VPD	LEFTADJ	IOEN	EOEN
Access	R/W	R/W			R/W	R/W	R/W	R/W
Reset	0	0			0	0	0	0

Bits 7:6 – REFSEL[1:0] Reference Selection
This bit field selects the Reference Voltage for the DAC.

Value	Name	Description
0x0	INT1V	Internal voltage reference
0x1	AVDD	Analog voltage supply
0x2	VREFA	External reference
0x3	-	Reserved

Note: INT1V is the buffered internal reference of 1.0V, derived from the internal 1.1V bandgap reference.

Bit 3 – VPD Voltage Pump Disabled
This bit controls the behavior of the voltage pump.

Value	Description
0	Voltage pump is turned on/off automatically
1	Voltage pump is disabled.

Bit 2 – LEFTADJ Left-Adjusted Data
This bit controls how the 10-bit conversion data is adjusted in the Data and Data Buffer registers.

Value	Description
0	DATA and DATABUF registers are right-adjusted.
1	DATA and DATABUF registers are left-adjusted.

Bit 1 – IOEN Internal Output Enable

Value	Description
0	Internal DAC output not enabled.
1	Internal DAC output enabled to be used by the AC.

Bit 0 – EOEN External Output Enable

Value	Description
0	The DAC output is turned off.
1	The high-drive output buffer drives the DAC output to the internal ADC Positive Mux Input Selection and to the V_{OUT} pin.

© 2025 Microchip Technology Inc. and its subsidiaries

29.7.3. Event Control

Name: EVCTRL
Offset: 0x02
Reset: 0x00
Property: PAC Write-Protection

Table 29-4. Register Bit Attribute Legend

Symbol	Description	Symbol	Description	Symbol	Description
R	Readable bit	**HC**	Cleared by Hardware	(Grey cell)	Unimplemented
W	Writable bit	**HS**	Set by Hardware	**X**	Bit is unknown at Reset
K	Write to clear	**S**	Software settable bit	—	—

Bit	7	6	5	4	3	2	1	0
							EMPTYEO	STARTEI
Access							R/W	R/W
Reset							0	0

Bit 1 – EMPTYEO Data Buffer Empty Event Output
This bit indicates whether or not the Data Buffer Empty event is enabled and will be generated when the Data Buffer register is empty.

Value	Description
0	Data Buffer Empty event is disabled and will not be generated.
1	Data Buffer Empty event is enabled and will be generated.

Bit 0 – STARTEI Start Conversion Event Input
This bit indicates whether or not the Start Conversion event is enabled .

Value	Description
0	A new conversion will not be triggered on any incoming event. Only DATA must be written (not DATABUF).
1	A new conversion will be triggered on any incoming event. Only DATABUF must be written (not DATA).

© 2025 Microchip Technology Inc. and its subsidiaries

29.7.4. Interrupt Enable Clear

Name: INTENCLR
Offset: 0x04
Reset: 0x00
Property: PAC Write-Protection

This register allows the user to disable an interrupt without doing a read-modify-write operation. Changes in this register will also be reflected in the Interrupt Enable Set register (INTENSET).

Table 29-5. Register Bit Attribute Legend

Symbol	Description	Symbol	Description	Symbol	Description
R	Readable bit	**HC**	Cleared by Hardware	(Grey cell)	Unimplemented
W	Writable bit	**HS**	Set by Hardware	**X**	Bit is unknown at Reset
K	Write to clear	**S**	Software settable bit	—	—

Bit	7	6	5	4	3	2	1	0
						SYNCRDY	EMPTY	UNDERRUN
Access						R/W	R/W	R/W
Reset						0	0	0

Bit 2 – SYNCRDY Synchronization Ready Interrupt Enable
Writing a '0' to this bit has no effect.
Writing a '1' to this bit will clear the Synchronization Ready Interrupt Enable bit, which disables the Synchronization Ready interrupt.

Value	Description
0	The Synchronization Ready interrupt is disabled.
1	The Synchronization Ready interrupt is enabled.

Bit 1 – EMPTY Data Buffer Empty Interrupt Enable
Writing a '0' to this bit has no effect.
Writing a '1' to this bit will clear the Data Buffer Empty Interrupt Enable bit, which disables the Data Buffer Empty interrupt.

Value	Description
0	The Data Buffer Empty interrupt is disabled.
1	The Data Buffer Empty interrupt is enabled.

Bit 0 – UNDERRUN Underrun Interrupt Enable
Writing a '0' to this bit has no effect.
Writing a '1' to this bit will clear the Data Buffer Underrun Interrupt Enable bit, which disables the Data Buffer Underrun interrupt.

Value	Description
0	The Data Buffer Underrun interrupt is disabled.
1	The Data Buffer Underrun interrupt is enabled.

© 2025 Microchip Technology Inc. and its subsidiaries

29.7.5. Interrupt Enable Set

Name: INTENSET
Offset: 0x05
Reset: 0x00
Property: PAC Write-Protection

This register allows the user to enable an interrupt without doing a read-modify-write operation. Changes in this register will also be reflected in the Interrupt Enable Clear register (INTENCLR).

Table 29-6. Register Bit Attribute Legend

Symbol	Description	Symbol	Description	Symbol	Description
R	Readable bit	**HC**	Cleared by Hardware	(Grey cell)	Unimplemented
W	Writable bit	**HS**	Set by Hardware	**X**	Bit is unknown at Reset
K	Write to clear	**S**	Software settable bit	—	—

Bit	7	6	5	4	3	2	1	0
						SYNCRDY	EMPTY	UNDERRUN
Access						R/W	R/W	R/W
Reset						0	0	0

Bit 2 – SYNCRDY Synchronization Ready Interrupt Enable
Writing a '0' to this bit has no effect.
Writing a '1' to this bit will set the Synchronization Ready Interrupt Enable bit, which enables the Synchronization Ready interrupt.

Value	Description
0	The Synchronization Ready interrupt is disabled.
1	The Synchronization Ready interrupt is enabled.

Bit 1 – EMPTY Data Buffer Empty Interrupt Enable
Writing a '0' to this bit has no effect.
Writing a '1' to this bit will set the Data Buffer Empty Interrupt Enable bit, which enables the Data Buffer Empty interrupt.

Value	Description
0	The Data Buffer Empty interrupt is disabled.
1	The Data Buffer Empty interrupt is enabled.

Bit 0 – UNDERRUN Underrun Interrupt Enable
Writing a '0' to this bit has no effect.
Writing a '1' to this bit will set the Data Buffer Underrun Interrupt Enable bit, which enables the Data Buffer Underrun interrupt.

Value	Description
0	The Data Buffer Underrun interrupt is disabled.
1	The Data Buffer Underrun interrupt is enabled.

© 2025 Microchip Technology Inc. and its subsidiaries

29.7.6. Interrupt Flag Status and Clear

Name: INTFLAG
Offset: 0x06
Reset: 0x00
Property: PAC Write-Protection

Table 29-7. Register Bit Attribute Legend

Symbol	Description	Symbol	Description	Symbol	Description
R	Readable bit	**HC**	Cleared by Hardware	(Grey cell)	Unimplemented
W	Writable bit	**HS**	Set by Hardware	**X**	Bit is unknown at Reset
K	Write to clear	**S**	Software settable bit	—	—

Bit	7	6	5	4	3	2	1	0
						SYNCRDY	EMPTY	UNDERRUN
Access						R/W	R/W	R/W
Reset						0	0	0

Bit 2 – SYNCRDY Synchronization Ready Interrupt Enable
Writing a '0' to this bit has no effect.
Writing a '1' to this bit will clear the Synchronization Ready Interrupt Enable bit, which disables the Synchronization Ready interrupt.

Value	Description
0	The Synchronization Ready interrupt is disabled.
1	The Synchronization Ready interrupt is enabled.

Bit 1 – EMPTY Data Buffer Empty
This flag is cleared by writing a '1' to it or by writing new data to DATABUF.
This flag is set when data is transferred from DATABUF to DATA, and the DAC is ready to receive new data in DATABUF, and will generate an interrupt request if INTENCLR/SET.EMPTY is one.
Writing a '0' to this bit has no effect.
Writing a '1' to this bit will clear the Data Buffer Empty interrupt flag.

Bit 0 – UNDERRUN Underrun
This flag is cleared by writing a '1' to it.
This flag is set when a start conversion event occurs when DATABUF is empty, and will generate an interrupt request if INTENCLR/SET.UNDERRUN is one.
Writing a '0' to this bit has no effect.
Writing a '1' to this bit will clear the Underrun interrupt flag.

© 2025 Microchip Technology Inc. and its subsidiaries

29.7.7. Status

Name: STATUS
Offset: 0x07
Reset: 0x00
Property: -

Table 29-8. Register Bit Attribute Legend

Symbol	Description	Symbol	Description	Symbol	Description
R	Readable bit	**HC**	Cleared by Hardware	(Grey cell)	Unimplemented
W	Writable bit	**HS**	Set by Hardware	**X**	Bit is unknown at Reset
K	Write to clear	**S**	Software settable bit	—	—

Bit	7	6	5	4	3	2	1	0
	SYNCBUSY							
Access	R							
Reset	0							

Bit 7 – SYNCBUSY Synchronization Busy Status
This bit is cleared when the synchronization of registers between the clock domains is complete.
This bit is set when the synchronization of registers between clock domains is started.

© 2025 Microchip Technology Inc. and its subsidiaries

29.7.8. Data DAC

Name: DATA
Offset: 0x08
Reset: 0x0000
Property: PAC Write-Protection

Table 29-9. Register Bit Attribute Legend

Symbol	Description	Symbol	Description	Symbol	Description
R	Readable bit	**HC**	Cleared by Hardware	(Grey cell)	Unimplemented
W	Writable bit	**HS**	Set by Hardware	**X**	Bit is unknown at Reset
K	Write to clear	**S**	Software settable bit	—	—

Bit	15	14	13	12	11	10	9	8
	DATA[15:8]							
Access	W	W	W	W	W	W	W	W
Reset	0	0	0	0	0	0	0	0

Bit	7	6	5	4	3	2	1	0
	DATA[7:0]							
Access	W	W	W	W	W	W	W	W
Reset	0	0	0	0	0	0	0	0

Bits 15:0 – DATA[15:0] Data value to be converted
DATA register contains the 10-bit value that is converted to a voltage by the DAC. The adjustment of these 10 bits within the 16-bit register is controlled by CTRLB.LEFTADJ.

Table 29-10. Valid Data Bits

CTRLB.LEFTADJ	DATA	Description
0	DATA[9:0]	Right adjusted, 10-bits
1	DATA[15:6]	Left adjusted, 10-bits

© 2025 Microchip Technology Inc. and its subsidiaries

29.7.9. Data Buffer

Name: DATABUF
Offset: 0x0C
Reset: 0x0000
Property: Write-Synchronized

Table 29-11. Register Bit Attribute Legend

Symbol	Description	Symbol	Description	Symbol	Description
R	Readable bit	**HC**	Cleared by Hardware	(Grey cell)	Unimplemented
W	Writable bit	**HS**	Set by Hardware	**X**	Bit is unknown at Reset
K	Write to clear	**S**	Software settable bit	—	—

Bit	15	14	13	12	11	10	9	8
	DATABUF[15:8]							
Access	W	W	W	W	W	W	W	W
Reset	0	0	0	0	0	0	0	0

Bit	7	6	5	4	3	2	1	0
	DATABUF[7:0]							
Access	W	W	W	W	W	W	W	W
Reset	0	0	0	0	0	0	0	0

Bits 15:0 – DATABUF[15:0] Data Buffer
DATABUF contains the value to be transferred into DATA register.

© 2025 Microchip Technology Inc. and its subsidiaries

30. PTC - Peripheral Touch Controller

30.1. Overview

The Peripheral Touch Controller (PTC) acquires signals in order to detect a touch on the capacitive sensors. The external capacitive touch sensor is typically formed on a PCB, and the sensor electrodes are connected to the analog front end of the PTC through the I/O pins in the device. The PTC supports both self and mutual capacitance sensors.

In the Mutual Capacitance mode, sensing is done using capacitive touch matrices in various X-Y configurations, including indium tin oxide (ITO) sensor grids. The PTC requires one pin per X-line and one pin per Y-line.

In the Self Capacitance mode, the PTC requires only one pin (Y-line) for each touch sensor.

The number of available pins and the assignment of X- and Y-lines is depending on both package type and device configuration. Refer to the Configuration Summary and I/O Multiplexing table for details.

30.2. Feature

The following are key features of the PTC module:

- Low-Power, High-Sensitivity, Environmentally Robust Capacitive Touch Buttons, Sliders, and Wheels
  - Down to 8 µA with 200 ms scan rate
- Supports Wake-up on Touch from standby Sleep mode
- Supports Mutual Capacitance and Self Capacitance Sensing
  - Up to 16 buttons in self-capacitance mode
  - Up to 256 buttons in mutual-capacitance mode
- One Pin per Electrode – No External Components
- Load Compensating Charge Sensing
  - Parasitic capacitance compensation and adjustable gain for superior sensitivity
- Zero Drift Over the Temperature and AVDD Range
  - Auto calibration and recalibration of sensors
- Single-shot Charge Measurement
- Hardware Noise Filtering and Noise Signal Desynchronization for High Conducted Immunity
- Selectable channel change delay allows choosing the settling time on a new channel, as required
- Acquisition-start triggered by command or through auto-triggering feature
- Low CPU utilization through interrupt on acquisition-complete

© 2025 Microchip Technology Inc. and its subsidiaries

30.3. Block Diagram

Figure 30-1. PTC Block Diagram Mutual Capacitance

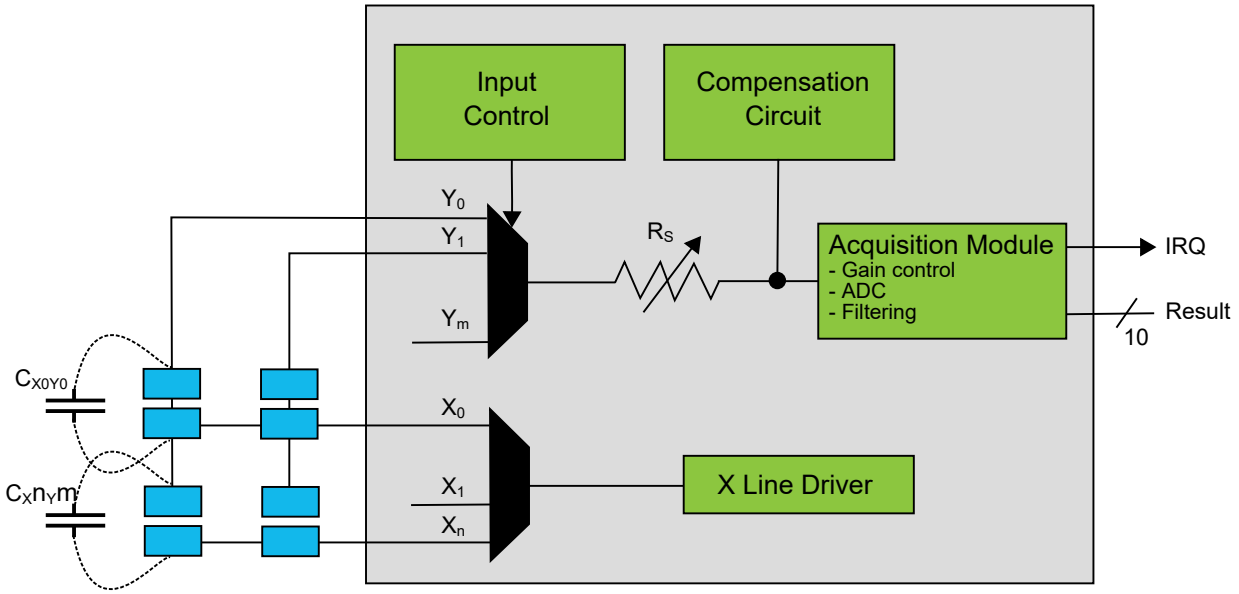

Figure 30-2. PTC Block Diagram Self Capacitance

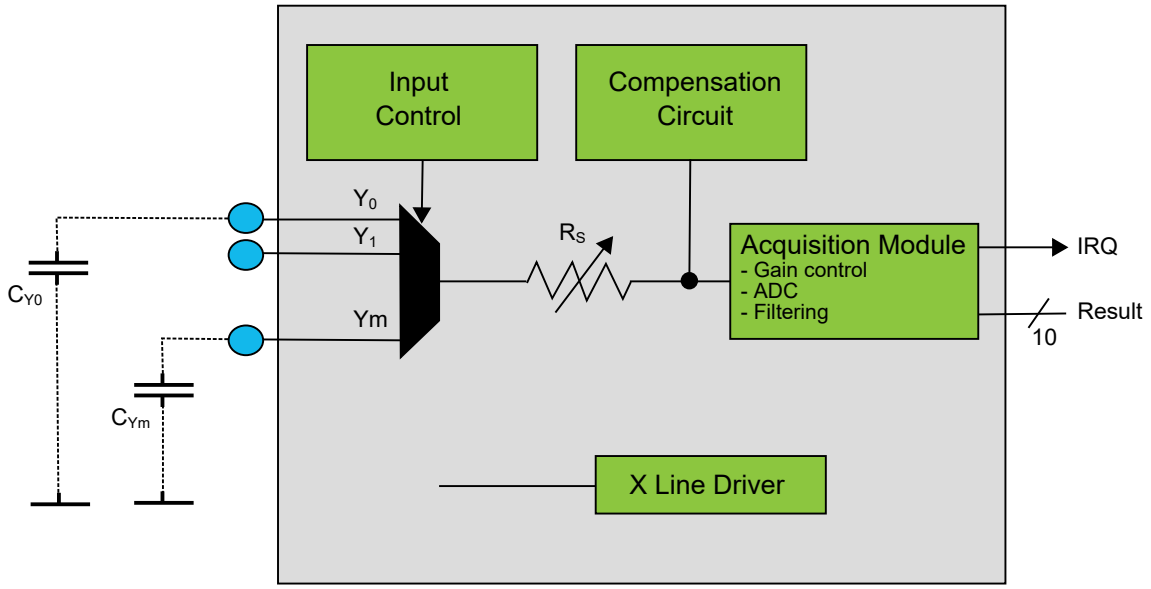

30.4. Signal Description

Table 30-1. Signal Description for PTC

Name	Type	Description
Y[m:0]	Analog	Y-line (Input/Output)

© 2025 Microchip Technology Inc. and its subsidiaries

Table 30-1. Signal Description for PTC (continued)

Name	Type	Description
X[n:0]	Digital	X-line (Output)

Note: The number of X- and Y-lines are device dependent. Refer to *Configuration Summary* for details.

Refer to *I/O Multiplexing and Considerations* for details on the pin mapping for this peripheral. One signal can be mapped on several pins.

30.5. Peripheral Dependencies

Table 30-2. Peripherals Configuration Summary

Peripheral Name	Base Address	IRQ Line	AHB Clock		APB Clock		Generic Clock	PAC		Events		
			Index	Enabled at Reset	Index	Enabled at Reset	Index	Index	Prot at Reset	User	Generator	SleepWalking
PTC	0x42004C00	24			19	N	27	19	N	13: STCONV	58: EOC 59:WCOMP	

30.5.1. I/O Lines

The I/O lines used for analog X- and Y-lines must be connected to external capacitive touch sensor electrodes. External components are not required for normal operation. However, to improve the EMC performance, a series resistor of 1 kΩ or more can be used on X- and Y-lines.

30.5.1.1. Mutual Capacitance Sensor Arrangement

A mutual capacitance sensor is formed between two I/O lines - an X electrode for transmitting and Y electrode for sensing. The mutual capacitance between the X and Y electrode is measured by the peripheral touch controller.

Figure 30-3. Mutual Capacitance Sensor Arrangement

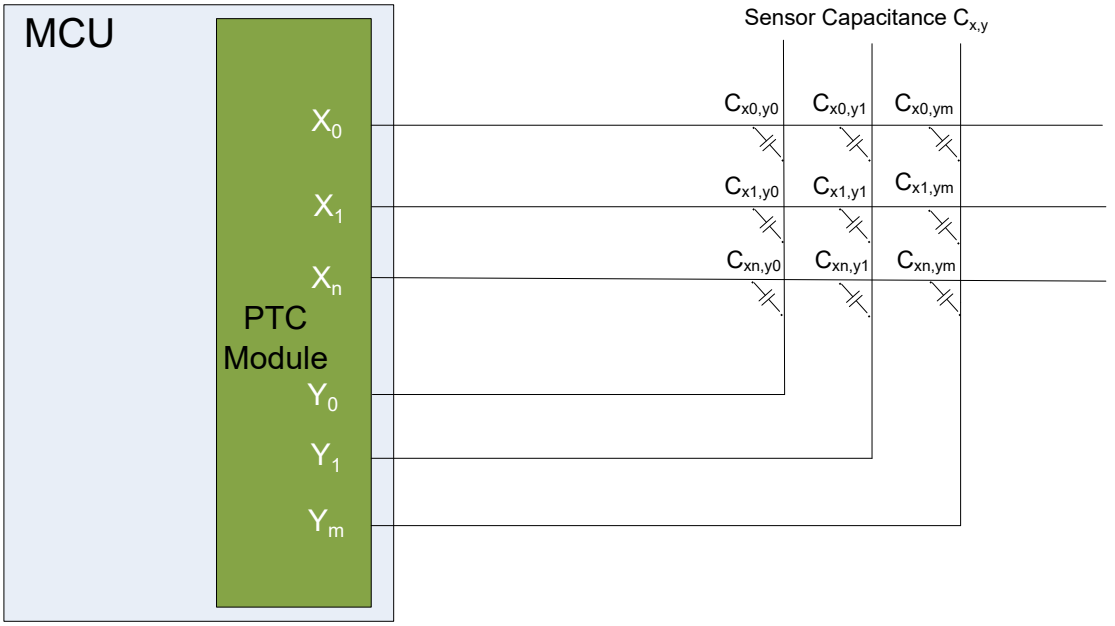

30.5.1.2. Self Capacitance Sensor Arrangement

A self capacitance sensor is connected to a single pin on the peripheral touch controller through the Y electrode for sensing the signal. The sense electrode capacitance is measured by the peripheral touch controller.

© 2025 Microchip Technology Inc. and its subsidiaries

Figure 30-4. Self-Capacitance Sensor Arrangement

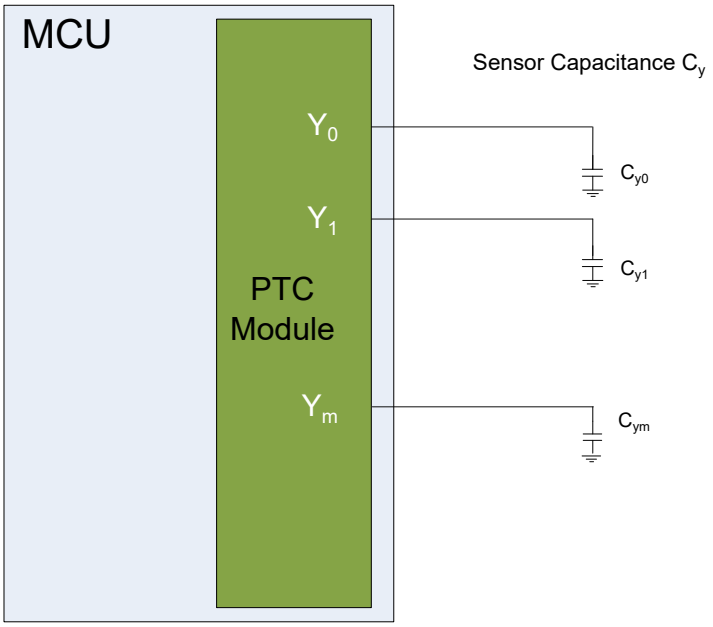

For more information about designing the touch sensor, refer to Buttons, Sliders and Wheels Touch Sensor Design Guide.

30.6. Functional Description

To access the PTC, the user must use MPLAB® Harmony v3 Touch Library. The MPLAB Harmony v3 Touch Library can be used to implement buttons, sliders, and wheels in a variety of combinations on a single interface.

Figure 30-5. Microchip Touch Library Usage

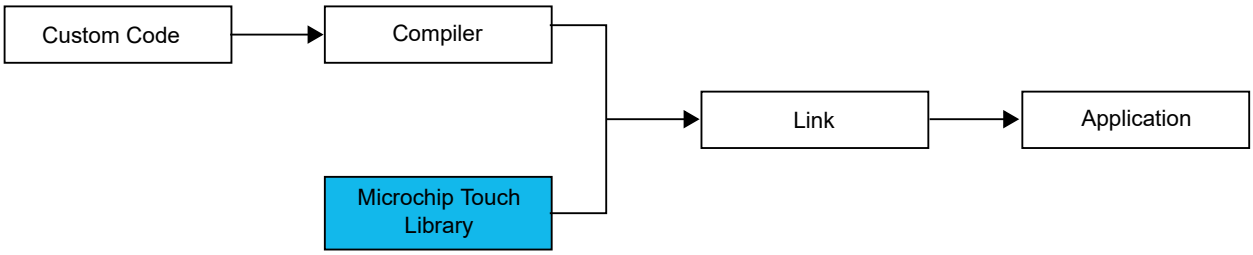

For additional information on Microchip Touch Library, refer to the “Touch Library Peripheral Touch Controller User Guide”, which is available for download at Microchip web site.

© 2025 Microchip Technology Inc. and its subsidiaries

31. Electrical Specifications 85°C

31.1. Disclaimer

All typical values are measured at T = 25°C unless otherwise specified. All minimum and maximum values are valid across operating temperature and voltage unless otherwise specified.

31.2. Absolute Maximum Ratings

Absolute maximum ratings for are listed below. Exposure to these maximum rating conditions for extended periods may affect device reliability. Functional operation of the device at these or any other conditions, above the parameters indicated in the operation listings of this specification, is not implied.

Table 31-1. MCU Absolute Maximum Electrical Characteristics

Ambient temperature under bias	-40°C to +85°C
Storage temperature	-60°C to +150°C
Voltage on VDDIO with respect to GND	-0.3V to +3.8V
Voltage on any pin(s), with respect to GND(2)	-0.3V to (VDDIO+0.3V)
Voltage on VREFA/B with respect to AVDD	-0.3V to (AVDD+0.3V)
Maximum current out of GND pins	130 mA
Maximum current into VDDIO pins	92 mA
Maximum output current sourced/sunk by any Low-Current Mode I/O pin	10 mA
Maximum output current sourced/sunk by any High-Current Mode I/O pin	20 mA
Maximum current sunk by all ports	129 mA
Maximum current sourced by all ports	129 mA
Maximum Junction Temperature	+100°C
ESD qualification:	
Human Body Model (HBM) per JESD22-A114	2000V
Charged Device Model (CDM) (ANSI/ESD STM 5.3.1) (All pins/Corner pins)	500V/750V

Notes:

1. Stresses above those listed under *Absolute Maximum Ratings* may cause permanent damage to the device. This is a stress rating only and functional operation of the device at those or any other conditions, above those indicated in the operation listings of this specification, is not implied. Exposure to maximum rating conditions for extended periods may affect device reliability.
2. When applying higher or lower voltage than those specified on the I/O pins, refer to the *DI_19/DI_21* to respect the maximum injection current specification.

31.3. General Operating Ratings and Thermal Conditions

The device must operate within the ratings listed in the following tables in order for all other electrical characteristics and typical characteristics of the device to be valid.

Table 31-2. Operating Frequency and Voltage

Param. No.	VDDIO, VDDIN, AVDD Range	Temp. Range (in °C)	Max MCU Frequency	Comments
DC_5	1.62 to 3.63V (1)	-40°C to +85°C	48 MHz	Industrial

Note:

1. With BOD33 disabled. If the BOD33 is enabled, refer to parameter REG_47.

© 2025 Microchip Technology Inc. and its subsidiaries

Table 31-3. MCU Thermal Operating Conditions

Rating	Symbol	Min.	Typ.	Max.	Unit
Industrial Temperature Devices: Operating Ambient Temperature Range Operating Junction Temperature Range	TA TJ	-40 —	—	85 100	°C °C
Power Dissipation: **Internal Chip Power Dissipation:** PINT = (VDDIO x (IDD –∑ IOHVDDIO)) + (VDDCORE x IDDCORE) + (AVDD x (IDDANA - ∑ IOHAVDD)) + (VDDREG x IDDREG) **I/O Pin Power Dissipation:** PI/O = ∑ ((VDDIO – VOHVDDIO) x IOHVDDIO) + ∑ (VOL x IOLVDDIO) + ∑ ((AVDD – VOHAVDD) x IOHAVDD) + ∑ (VOL x IOLAVDD)	PD	PINT + PI/O			W
Maximum Allowed Power Dissipation	PDMAX	(TJ – TA)/θJA			W

Table 31-4. Thermal Packaging Characteristics [1]

Characteristics	Symbol	Typ.	Max.	Unit
Thermal Resistance, 32-pin TQFP (7x7x1 mm) Package	θJA	63.1	—	°C/W
Thermal Resistance, 48-pin TQFP (7x7x1 mm) Package	θJA	62.7	—	°C/W
Thermal Resistance, 64-pin TQFP (10x10x1 mm) Package	θJA	56.3	—	°C/W
Thermal Resistance, 32-pin VQFN (5x5x1 mm) Package	θJA	40.9	—	°C/W
Thermal Resistance, 48-pin VQFN (7x7x0.9 mm) Package	θJA	30.9	—	°C/W
Thermal Resistance, 64-pin VQFN (9x9x1 mm) Package	θJA	31.4	—	°C/W

Note:
1. Junction to ambient thermal resistance, Theta-JA (θJA) numbers are achieved by package simulations.

31.4. Power Supply

Table 31-5. Power Supply DC Electrical Specifications

DC CHARACTERISTICS			Standard Operating Conditions: VDDIO = AVDD = VDD 1.62V to 3.63V (unless otherwise stated) **Operating Temperature:** **-40°C ≤ TA ≤ +85°C for Industrial**				
Param. No.	Symbol	Characteristics	Min.	Typ.	Max.	Units	Conditions
REG_1	VDDCORE_CIN[1]	VDDCORE Input Bypass parallel Capacitor pair	0.8	1	1.2	µF	Bulk Ceramic or solid Tantalum with ESR <0.5Ω. Minimum and maximum represent absolute values including cap tolerances.
REG_3			80	100	—	nF	Ceramic X7R with ESR <0.5Ω
REG_4	VDDIO_CIN[1]	VDDIO Input Bypass parallel Capacitor pair	8	10[6]	—	µF	Bulk Ceramic or solid Tantalum with ESR <0.5Ω[2]
REG_5			80	100	—	nF	Ceramic X7R with ESR <0.5Ω on all VDDIO pins

© 2025 Microchip Technology Inc. and its subsidiaries

Table 31-5. Power Supply DC Electrical Specifications (continued)

DC CHARACTERISTICS			Standard Operating Conditions: VDDIO = AVDD = VDD 1.62V to 3.63V (unless otherwise stated) **Operating Temperature:** **-40°C ≤ TA ≤ +85°C for Industrial**				
Param. No.	Symbol	Characteristics	Min.	Typ.	Max.	Units	Conditions
REG_6	VDDIN_CIN[1]	VDDIN Input Bypass parallel Capacitor pair	8	10	—	nF	Ceramic X7R with ESR <0.5Ω
REG_7a			0.8	1	—	µF	Bulk Ceramic or solid Tantalum with ESR <0.5Ω[2]
REG_7b			8	10[7]	—	µF	Bulk Ceramic or solid Tantalum with ESR <0.5Ω[2]
REG_8			80	100	—	nF	Ceramic X7R with ESR <0.5Ω on all VDDIO pins
REG_9	VREFA/B_CIN[1]	External VREFA/B Input Bypass parallel Capacitor pair	3.76	4.7	—	µF	Bulk Ceramic or solid Tantalum with ESR <0.5Ω
			80	100	—	nF	Ceramic X7R with ESR <0.5Ω
REG_17	AVDD_CIN[1]	AVDD Input Bypass parallel Capacitor pair	8	10	—	µF	Bulk Ceramic or solid Tantalum with ESR <0.5Ω[2]
REG_19			80	100	—	nF	Ceramic X7R with ESR <0.5Ω
REG_23	AVDD_LEXT	AVDD series Ferrite Bead DCR (DC Resistance)	—	—	0.1	Ω	≥600 Ω @ 100 MHz
REG_25		Ferrite Bead current Rating	500	—	—	mA	—
REG_36	VDDCORE	DC calibrated output voltage	1.1	1.23	1.30	V	—
REG_37	VDDIO, VDDIN, AVDD[3]	VDDIO, VDDIN, AVDD Input Voltage Range	1.62	—	3.63	V	—
REG_43	SVDDIO/VDD_R	VDDIN, AVDD, VDDIO Rise Ramp Rate to Ensure Internal Power-on Reset Signal	0.004	—	0.1	V/µs	Failure to meet this specification may lead to startup failure or unexpected behaviors. **Note:** The Minimum Supply Rise Rate does not apply if the voltage on the Reset pin is lower than the VILmax value, until VDD reaches 1.62 V.
REG_44	SVDDIO/VDD_F	VDDIN, AVDD, VDDIO Fall Ramp Rate to Ensure Internal Power-on Reset Signal	—	—	0.05	V/µs	Failure to meet this specification may cause the device to not detect reset
REG_45a	VPOR+	VDDIO/VDD Rising Power-on Reset	1.27	1.45	1.58	V	VDDIO/VDD power-up/ power-down (See Param REG43, VDDIO/VDD Rise Ramp Rate)

© 2025 Microchip Technology Inc. and its subsidiaries

Table 31-5. Power Supply DC Electrical Specifications (continued)

DC CHARACTERISTICS			Standard Operating Conditions: VDDIO = AVDD = VDD 1.62V to 3.63V (unless otherwise stated) **Operating Temperature:** **-40°C ≤ TA ≤ +85°C for Industrial**				
Param. No.	Symbol	Characteristics	Min.	Typ.	Max.	Units	Conditions
REG_45b	VPOR-	VDDIO/VDD Falling Power-on Reset	0.72	0.99	1.32	V	VDDIO/VDD Power-up/ Power-down (See Param REG43, VDDIO/VDD Fall Ramp Rate)
REG_47	VBOD33(4,5)	VDD BOD (All modes)(4,5)	1.61	—	1.67	V	(Default Setting) LEVEL[5:0] = 0x6 (4) HYST[0] = 0x0
			1.61	—	1.75	V	(Default Setting) LEVEL[5:0] = 0x6 (4,5) HYST[0] = 0x1
			1.64	—	1.71	V	(Default Setting) LEVEL[5:0] = 0x7 (4) HYST[0] = 0x0
			1.64	—	1.79	V	(Default Setting) LEVEL[5:0] = 0x7 (4,5) HYST[0] = 0x1
			2.55	—	2.65	V	(Default Setting) LEVEL[5:0] = 0x22 (4) HYST[0] = 0x0
			2.55	—	2.75	V	(Default Setting) LEVEL[5:0] = 0x22(4,5) HYST[0] = 0x1
			2.72	—	2.81	V	(Default Setting) LEVEL[5:0] = 0x27(4) HYST[0] = 0x0
			2.72	—	2.92	V	(Default Setting) LEVEL[5:0] = 0x27(4,5) HYST[0] = 0x1
			3.02	—	3.20	V	LEVEL[5:0] = 0x30(4) HYST[0] = 0x0
			3.02	—	3.33	V	LEVEL[5:0] = 0x30(4,5) HYST[0] = 0x1
REG_51	VBOD33LEVEL_STEP	VBOD33 step size, LEVEL[7:0]	—	34	—	mV	Step Size
REG_52	VBOD33HYST_STEP	VBOD33 Hysteresis step size, HYST[3:0]	—	See(5)	—	mV	Step Size
REG_53	TRST	External RESET valid active pulse width	1	—	—	µs	Minimum reset active time to guarantee MCU reset

© 2025 Microchip Technology Inc. and its subsidiaries

Table 31-5. Power Supply DC Electrical Specifications (continued)

DC CHARACTERISTICS			Standard Operating Conditions: VDDIO = AVDD = VDD 1.62V to 3.63V (unless otherwise stated) **Operating Temperature:** **-40°C ≤ TA ≤ +85°C for Industrial**				
Param. No.	Symbol	Characteristics	Min.	Typ.	Max.	Units	Conditions

Notes:

1. All bypass caps should be located immediately adjacent to pins and on the same side of the PCB as the MCU.
2. Only one bulk capacitor (REG_4 or REG_7) is enough for both VDDIN and VDDIO.
3. VDDIN and AVDD must be at the same voltage level. VDDIO should be lower or equal to VDDIN/AVDD. The common voltage is referred to as VDD in the data sheet. Some I/O are in the VDDIO cluster, but can be multiplexed as analog inputs or outputs (e.g. PTC.X[n] pads). In such a case, AVDD is used to power the I/O. Using this configuration may result in an electrical conflict if the VDDIO voltage is lower than the VDDIN/AVDD.
4. VBOD33(min) = 1.404 + d(BOD33.LEVEL[5:0]) * 0.034.
5. VBOD33(max) at BOD33.HYST[0] = 1 = VBOD33(max) at BOD33.HYST[0] = 0 + VBOD33HYST_STEP.
6. Shared between VDDIO, VDDIN, and AVDD.

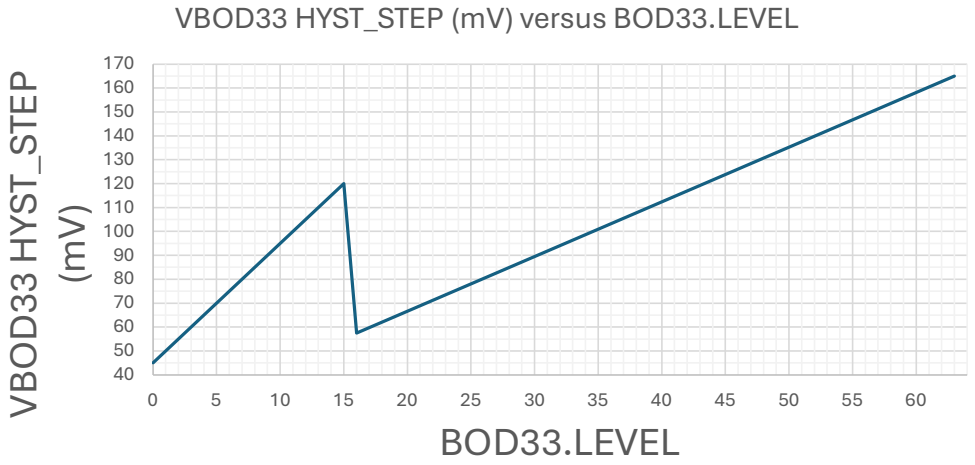

31.5. MCU Active Power

Table 31-6. MCU Active Current Consumption DC Electrical Specifications

DC CHARACTERISTICS				Standard Operating Conditions: VDDIO = AVDD = VDD 1.62V to 3.63V (unless otherwise stated) **Operating Temperature:** **-40°C ≤ TA ≤ +85°C for Industrial**			
Param. No.	Symbol	Characteristics	Clock/Freq	Typ.	Max.	Units	Conditions
APWR_1	IDD_ACTIVE(1,2)	MCU IDD in Active mode	DFLL 48 MHz	3.9	4.07	mA	AVDD = VDDIO = 3.3V XOSC32K @ 32.768 kHz as reference of DFLL48M
APWR_3				3.51	3.63	mA	AVDD = VDDIO = 1.8V XOSC32K at 32.768 kHz as reference of DFLL48M CPU is running on Flash with 3 wait states

© 2025 Microchip Technology Inc. and its subsidiaries

Table 31-6. MCU Active Current Consumption DC Electrical Specifications (continued)

DC CHARACTERISTICS				Standard Operating Conditions: VDDIO = AVDD = VDD 1.62V to 3.63V (unless otherwise stated) **Operating Temperature:** **-40°C ≤ TA ≤ +85°C for Industrial**			
Param. No.	Symbol	Characteristics	Clock/Freq	Typ.	Max.	Units	Conditions

Notes:

1. Conditions:
   - No peripheral modules are operating (i.e., all peripherals are inactive)
   - MCU is running on Flash with 1 wait states unless otherwise specified
   - The NVMCTRL cache is enabled
   - BOD33 disabled
   - I/Os are inactive input mode with input trigger disabled
   - All clock generation sources disabled unless otherwise specified.
   - GCLK clock generators 1 to 8 stopped (GENCTRL[8:1].GENEN = 0)
   - CPU, AHB clocks undivided:
     - APBA clock divided by 4
     - APBB and APBC bridges off
   - The following AHB module clocks are running: NVMCTRL, APBA bridge
     - All other AHB clocks stopped
   - The following peripheral clocks running: PM, SYSCTRL, RTC
     - All other peripheral clocks stopped
   - RESET# = VDDIO
   - Power consumption varies over temperature. Worst case is given by max.
2. MCU Running CoreMark® Test Suite

31.6. MCU Idle Power

Table 31-7. MCU Idle Current Consumption DC Electrical Specifications

DC CHARACTERISTICS				Standard Operating Conditions: VDDIO = AVDD = VDD 1.62V to 3.63V (unless otherwise stated) **Operating Temperature:** **-40°C ≤ TA ≤ +85°C for Industrial**			
Param. No.	Symbol	Characteristics	Clock/Freq	Typ.	Max.	Units	Conditions
IPWR_1	IDD_IDLE(1)	MCU IDD in IDLE0 mode	DFLL 48 MHz	1.28	1.34	mA	AVDD = VDDIO = 3.3V XOSC32K at 32.768 kHz as reference of DFLL48M
IPWR_13		MCU IDD in IDLE2 mode		0.76	0.79	mA	AVDD = VDDIO = 3.3V XOSC32K at 32.768 kHz as reference of DFLL48M

© 2025 Microchip Technology Inc. and its subsidiaries

Table 31-7. MCU Idle Current Consumption DC Electrical Specifications (continued)

DC CHARACTERISTICS				Standard Operating Conditions: VDDIO = AVDD = VDD 1.62V to 3.63V (unless otherwise stated) **Operating Temperature:** **-40°C ≤ TA ≤ +85°C for Industrial**			
Param. No.	Symbol	Characteristics	Clock/Freq	Typ.	Max.	Units	Conditions

Note:

1. Conditions:
   - No peripheral modules are operating (i.e., all peripherals inactive)
   - MCLK all APB clock masked except MCLK and NVMCTRL
   - MCLK.AHBMASK = 0x00C00FFF
   - CMCC Enable
   - MCU is running on Flash with automatic 1 wait states unless otherwise specified
   - Low-power cache enabled
   - BOD33 is disabled
   - NVMCTRL cache enabled
   - I/Os are inactive input mode with input trigger disabled
   - All clock generation sources disabled unless otherwise specified
   - GCLK clock generators 1 to 8 stopped (GENCTRL[8:1].GENEN = 0)
   - CPU, AHB clocks undivided
     - APBA clock divided by 4
     - APBB and APBC bridges off
   - The following AHB module clocks are running: NVMCTRL, APBA bridge
     - All other AHB clocks stopped
   - The following peripheral clocks running: PM, SYSCTRL, RTC
     - All other peripheral clocks stopped
   - RESET# = VDDIO
   - Power consumption varies over temperature. Worst case is given by max.

31.7. MCU Standby Power

Table 31-8. MCU Standby Current Consumption DC Electrical Specifications

DC CHARACTERISTICS				Standard Operating Conditions: VDDIO = AVDD = VDD 1.62V to 3.63V (unless otherwise stated) **Operating Temperature:** **-40°C ≤ TA ≤ +85°C for Industrial**			
Param. No.	Symbol	Characteristics	VDDIO	Typ.	Max.	Units	Conditions
SPWR_1	IDD_STANDB(1)	MCU IDD in Standby mode XOSC32K running RTC running at 1 kHz	3.3V	2.47	94	µA	XOSC32K running RTC running at 1 kHz(1) SYSCTRL ->VREG.bit.RUNSTDBY = 0
SPWR_29		MCU IDD in Standby mode XOSC32K stopped RTC stopped	3.3V	1.35	90	µA	XOSC32K stopped, RTC stopped SYSCTRL->VREG.bit.RUNSTDBY = 0

© 2025 Microchip Technology Inc. and its subsidiaries

Table 31-8. MCU Standby Current Consumption DC Electrical Specifications (continued)

DC CHARACTERISTICS				Standard Operating Conditions: VDDIO = AVDD = VDD 1.62V to 3.63V (unless otherwise stated) **Operating Temperature:** **-40°C ≤ TA ≤ +85°C for Industrial**			
Param. No.	Symbol	Characteristics	VDDIO	Typ.	Max.	Units	Conditions

Note:

1. Conditions:
   - System in Standby mode
   - No SleepWalking (except RTC when indicated)
   - Peripheral modules are inactive (except RTC when indicated)
   - All clocks stopped (CPU, AHB, APB, Main, GCLK, except RTC running at 1 KHz from XOSC32K when indicated)
   - All clock generation sources disabled except XOSC32K running with external 32 kHz crystal when indicated
   - I/Os are inactive input mode with input trigger disabled
   - WDT
   - BOD33 disabled
   - RESET# = VDDIO

31.8. Wake-Up Power

Table 31-9. Wake-Up Timings From Low-Power Modes AC Electrical Specifications [1]

AC CHARACTERISTICS			Standard Operating Conditions: VDDIO = AVDD = VDD 1.62V to 3.63V (unless otherwise stated) **Operating Temperature: -** **40°C ≤ TA ≤ +85°C for Industrial**				
Param. No.	Symbol	Characteristics	Min.	Typ.	Max.	Units	Conditions
WKUP_1	WKUP_IDLE0[1]	Wake from IDLE0 mode	—	4.0	—	µs	—
WKUP_2	WKUP_IDLE2[1]	Wake from IDLE2 mode	—	14.5	—	µs	—
WKUP_3	WKUP_STDBY	Wake from Standby mode	—	19.7	—	µs	—

Note:

1. Conditions:
   - VDD = VDDIO = 3.3V
   - CPU Clock = 8 MHz from OSC8M
   - 0 wait states
   - Cache disabled
   - Flash in WAKEUPINSTANT mode (NVMCTRL.CTRLB.SLEEPRM = 1)

31.9. Peripheral Power

The following table provides the peripheral active current DC electrical specifications.

© 2025 Microchip Technology Inc. and its subsidiaries

Table 31-10. Peripheral Active Current DC Electrical Specifications

DC CHARACTERISTICS[1]			Standard Operating Conditions: VDDIO = AVDD = VDD 1.62V to 3.63V (unless otherwise stated) **Operating temperature:** **-40°C ≤ TA ≤ +85°C for Industrial**
Param. No.	Symbol	Characteristics	Conditions
MODULES/PERIPHERALS ACTIVE CURRENTS ≤ 1.5 µA			
PAI_10	IOSC32K	OSC32K current	VDDIO = AVDD = VDD = 3.3V
MODULES/PERIPHERALS ACTIVE CURRENTS ≤ 2 µA			
PAI_20	IXOSC32K	XOSC32K current	VDDIO = AVDD = VDD = 3.3V
MODULES/PERIPHERALS ACTIVE CURRENTS ≤ 50 µA			
PAI_30	IBOD33	BOD33 Active current	Continuous mode, VDDIO = AVDD = VDD = 3.3V
PAI_32	IWDT	WDT Active current	fGCLK_WDT = 32 kHz, normal mode with EW
MODULES/PERIPHERALS ACTIVE CURRENTS ≤ 100 µA			
PAI_40	IOSC8M	OSC8M current	OSM8M enable at 8 MHz
MODULES/PERIPHERALS ACTIVE CURRENTS ≤ 250 µA			
PAI_60	IXOSC_2MHZ_AMPGC_ON	XOSC current (1 of 10)	F = 2 MHz - CL = 20 pF XOSC.GAIN = 0, AMPGC = ON, AVDD = VDDIO = 3.3V
PAI_62	IXOSC_2MHZ_AMPGC_OFF	XOSC current (2 of 10)	F = 2 MHz - CL = 20 pF XOSC.GAIN = 0, AMPGC = OFF, AVDD = VDDIO = 3.3V
MODULES/PERIPHERALS ACTIVE CURRENTS ≤ 300 µA			
PAI_70	ITC4/5/6/7	TC Active current	Normal Frequency mode, Counter in 16 bits mode
PAI_72	IAC	AC Active current	COMP0 and COMP1 operating in low speed, Vscaler0 = Vscaler1 = AVDD
PAI_74	IXOSC_4MHZ_AMPGC_ON	XOSC current (3 of 10)	F = 4 MHz - CL = 20 pF XOSC.GAIN = 1, AMPGC = ON, AVDD = VDDIO = 3.3V
PAI_76	IXOSC_4MHZ_AMPGC_OFF	XOSC current (4 of 10)	F = 4 MHz - CL = 20 pF XOSC.GAIN = 1, AMPGC = OFF, AVDD = VDDIO = 3.3V
MODULES/PERIPHERALS ACTIVE CURRENTS ≤ 350 µA			
PAI_80	IXOSC_8MHZ_AMPGC_ON	XOSC current (5 of 10)	F = 8 MHz - CL = 20 pF XOSC.GAIN = 1, AMPGC = ON, AVDD = VDDIO = 3.3V
PAI_82	ISERCOMx	SERCOM active current	USART mode, no communication
MODULES/PERIPHERALS ACTIVE CURRENTS ≤ 400 µA			
PAI_90	IEIC	EIC/NMI Active current	One EIC line operating
PAI_92	IDFLL	DFLL48M Active current	DFLL48M in closed-loop mode, fREF = XOSC32K 32768 Hz
MODULES/PERIPHERALS ACTIVE CURRENTS ≤ 450 µA			
PAI_100	IXOSC_8MHZ_AMPGC_OFF	XOSC current (6 of 10)	F = 8 MHz - CL = 20 pF XOSC.GAIN = 2, AMPGC = OFF, AVDD = VDDIO = 3.3V
MODULES/PERIPHERALS ACTIVE CURRENTS ≤ 550 µA			
PAI_110	IDAC	DAC Active current	VREF = AVDD, DAC DATA = 0x3FF
MODULES/PERIPHERALS ACTIVE CURRENTS ≤ 700 µA			
PAI_120	IXOSC_16MHZ_AMPGC_ON	XOSC current (7 of 10)	F = 16 MHz - CL = 20 pF XOSC.GAIN = 3, AMPGC = ON, AVDD = VDDIO = 3.3V
MODULES/PERIPHERALS ACTIVE CURRENTS ≤ 750 µA			
PAI_130	IPTC	PTC Active current	Free-running mode
MODULES/PERIPHERALS ACTIVE CURRENTS ≤ 900 µA			

© 2025 Microchip Technology Inc. and its subsidiaries

Table 31-10. Peripheral Active Current DC Electrical Specifications (continued)

DC CHARACTERISTICS[1]			Standard Operating Conditions: VDDIO = AVDD = VDD 1.62V to 3.63V (unless otherwise stated) **Operating temperature:** **-40°C ≤ TA ≤ +85°C for Industrial**
Param. No.	Symbol	Characteristics	Conditions
PAI_140	IXOSC_16MHZ_AMPGC_OFF	XOSC current (8 of 10)	F = 16 MHz - CL = 20 pF XOSC.GAIN = 3, AMPGC = OFF, AVDD = VDDIO = 3.3V
MODULES/PERIPHERALS ACTIVE CURRENTS ≤ 1.5 mA			
PAI_150	IXOSC_32MHZ_AMPGC_ON	XOSC current (9 of 10)	F = 32 MHz - CL = 12 pF XOSC.GAIN = 4, AMPGC = ON, AVDD = VDDIO = 3.3V
PAI_152	IADC	ADC Active current	Free-running mode, 350 ksps, AVDD = VREF = 3.3V
MODULES/PERIPHERALS ACTIVE CURRENTS ≤ 3 mA			
PAI_160	IXOSC_32MHZ_AMPGC_OFF	XOSC current (10 of 10)	F = 32 MHz - CL = 12 pF XOSC.GAIN = 4, AMPGC = OFF, AVDD = VDDIO = 3.3V

Note:

1. Conditions:
   - Only mentioned peripheral modules and MP, SYSTCTRL modules are operating (i.e., rest of the peripherals are inactive)
   - The following AHB module clocks are running: NVMCTRL, HPB2 bridge, HPB1 bridge, HPB0 bridge (all other AHB clocks are stopped)
   - All clock generation sources disabled unless otherwise specified
   - All clock sources disabled except XOSC32K running with external 32 kHz crystal and DFLL48M using XOSC32K as reference and running at 48 MHz on GCLK0
   - GCLK clock generators 1 to 8 stopped (GENCTRL[8:1].GENEN = 0)
   - CP, AHB, and APB clocks undivided
   - I/Os are inactive input mode with input trigger disabled
   - WDT, RTC disabled
   - RESET# = VDDIO
   - CPU is running on Flash with 3 wait states
   - The NVMCTRL cache is enabled
   - BOD33 disabled
   - Measure is differential between active and inactive module in those conditions

31.10. I/O Specifications

Table 31-11. I/O Pin AC/DC Electrical Specifications [7]

AC/DC CHARACTERISTICS			Standard Operating Conditions: VDDIO = AVDD = VDD 1.62V to 3.63V (unless otherwise stated) **Operating Temperature:** **-40°C ≤ TA ≤ +85°C for Industrial**				
Param. No.	Symbol	Characteristics	Min.	Typ.	Max.	Units	Conditions
DI_1	VIL	Input Low- Voltage I/O Pins	GND	—	0.25*VDD	V	1.62V ≤ VDD ≤ 2.7V
			GND	—	0.3*VDD	V	2.7V ≤ VDD ≤ 3.63V
DI_3	VIH	Input High Voltage	0.7*VDD	—	VDD	V	1.62V ≤ VDD ≤ 2.7V
			0.55*VDD	—	VDD	V	2.7V ≤ VDD ≤ 3.63V

© 2025 Microchip Technology Inc. and its subsidiaries

Table 31-11. I/O Pin AC/DC Electrical Specifications [7] (continued)

AC/DC CHARACTERISTICS			Standard Operating Conditions: VDDIO = AVDD = VDD 1.62V to 3.63V (unless otherwise stated) **Operating Temperature:** **-40°C ≤ TA ≤ +85°C for Industrial**				
Param. No.	Symbol	Characteristics	Min.	Typ.	Max.	Units	Conditions
DI_5	VOL	Output Low Voltage (Standard pins and I²C pins in GPIO mode, Low Drv Strength, DRVSTR = 0)	—	—	0.2*VDD	V	IOL (1.62V ≤ VDD <3V) = 1 mA IOL (3V ≤ VDD ≤ 3.63V) = 2.5 mA
DI_7		Output voltage low (Standard pins and I²C pins in GPIO mode, High Drv Strength, DRVSTR = 1)					IOL (1.62V ≤ VDD <3V) = 3 mA IOL (3V ≤ VDD ≤ 3.63V) =10 mA
DI_9	VOH	Output High Voltage (Standard pins and I²C pins in GPIO mode, Low Drv Strength, DRVSTR = 0)	0.8*VDD	—	—	V	IOH (1.62V ≤ VDD <3V) = 0.7 mA IOH (3V ≤ VDD ≤ 3.63V) = 2 mA
DI_11		Output High Voltage (Standard pins and I²C pins in GPIO mode, High Drv Strength, DRVSTR = 1)					IOH (1.62V ≤ VDD <3V) = 2 mA IOH (3V ≤ VDD ≤ 3.63V) = 7 mA
DI_13	IIL	Input Pin Leakage Current	-1	—	1	µA	GND ≤ VPIN ≤ 3.63V (VPIN = Voltage present on Pin)
DI_15	RPDWN	Internal Pull-Down (DIR = OUT = 0, PULLEN = 1)	20	—	60	kΩ	1.62V ≤ VDD ≤ 3.63V
DI_17	RPUP	Internal Pull-Up (DIR = 0, OUT = PULLEN = 1)	20	—	60	kΩ	
DI_19	IICL[1, 3, 4]	Input Low- Injection Current	-1	—	—	mA	This parameter applies to all I/O pins.
DI_21	IICH[2,3,4]	Input High Injection Current	—	—	1	mA	This parameter applies to all I/O pins.
DI_23	∑IICT	Total Input Injection Current (sum of all I/O and control pins) Absolute value of | ∑IICT |	-45	—	45	mA	Absolute instantaneous sum of all ± input injection currents from all I/O pins. (| IICL | + | IICH |) ≤ ∑IICT
DI_25	TRISE	I/O Pin Rise Time (Standard pins, Low Drv Strength, DRVSTR = 0)[5]	—	—	14	ns	VDD = 3.3V , CLOAD = 20 pF(max)[6]
		I/O Pin Rise Time (Standard pins, High Drv Strength, DRVSTR = 1)[5]	—	—	7	ns	VDD = 3.3V , CLOAD = 20 pF(max)[6]
DI_27	TFALL	I/O pin Fall Time (Standard pins, Low Drv Strength, DRVSTR = 0)[5]	—	—	14	ns	VDD = 3.3V , CLOAD = 20 pF(max)[6]
		I/O pin Fall Time (Standard pins, High Drv Strength, DRVSTR = 1)[5]	—	—	7	ns	VDD = 3.3V , CLOAD = 20 pF(max)[6]

© 2025 Microchip Technology Inc. and its subsidiaries

Table 31-11. I/O Pin AC/DC Electrical Specifications [7] (continued)

AC/DC CHARACTERISTICS			Standard Operating Conditions: VDDIO = AVDD = VDD 1.62V to 3.63V (unless otherwise stated) **Operating Temperature:** **-40°C ≤ TA ≤ +85°C for Industrial**				
Param. No.	Symbol	Characteristics	Min.	Typ.	Max.	Units	Conditions

Notes:

1. VIL source < (GND - 0.6). Characterized but not tested.
2. 3.6V < VIH source ≤ 4.2V.
3. If the sum of all injection currents are > | ∑IICT | it can affect the ADC results by approximately 4 to 6 counts (i.e., VIH Source > (VDDIO + 0.6) or VIL source < (GND -0.6)).
4. Any number and the combination of I/O pins not excluded under IICL or IICH conditions are permitted provided the absolute instantaneous sum of the input injection currents from all pins do not exceed the specified ∑IICT limit. To limit the injection current the user must insert a resistor in series RSERIES (i.e., RS) between the input source voltage and device pin. The resistor value is calculated accordingly:
   - For negative Input voltages less than (GND -0.6): RS ≥ absolute value of | ((VIL source - (GND -0.6))/IICL) |
   - For positive input voltages greater than (VDDIO +0.6): RS ≥ ((VIH source - (VDDIO +0.6))/IICH)
   - For Vpin voltages > VDDIO +0.6 and < GND -0.6, then RS = the larger of the values calculated above
5. The following pins are I²C pins and have the same properties as standard pins when not used as SERCOM I²C pins: PA08, PA09, PA12, PA13, PA16, PA17, PA22, PA23, PB12, PB13, PB16, PB17, PB30, PB31. When used in SERCOM I²C mode, refer to the I2CM_5/7 and I2CS_5/7 parameters.
6. Rising and falling measurements given between 10% and 90%.
7. The RESET pin has the same properties as standard GPIOs.

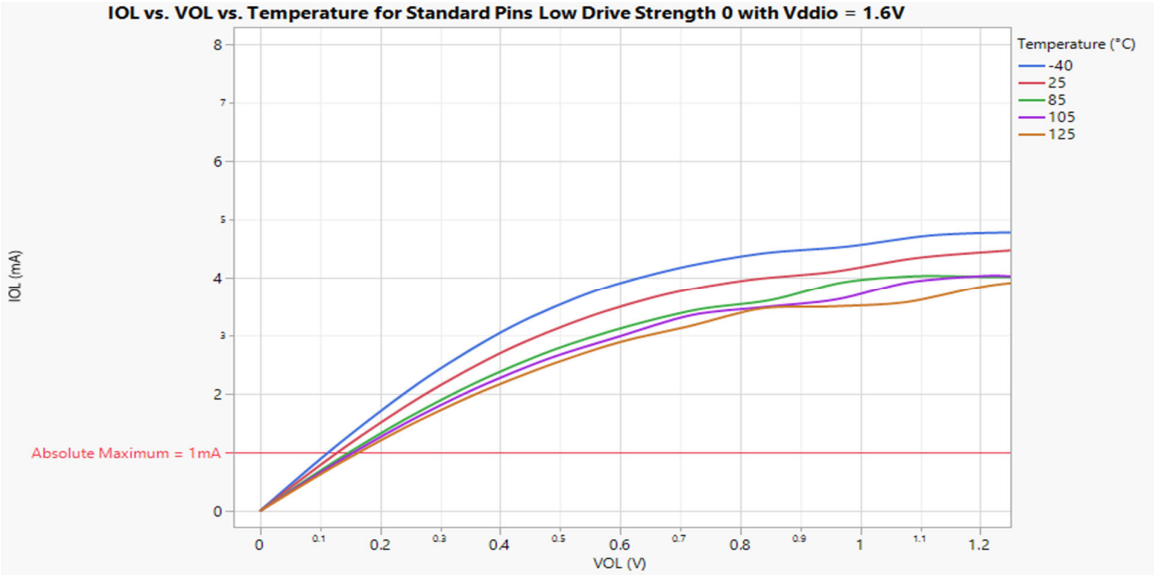

© 2025 Microchip Technology Inc. and its subsidiaries

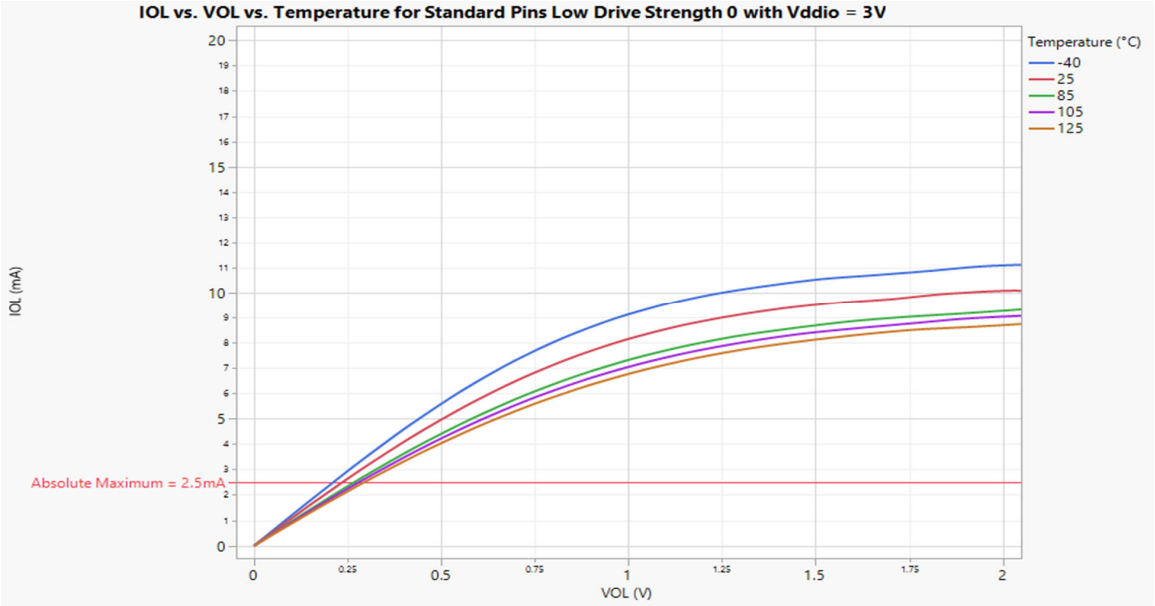

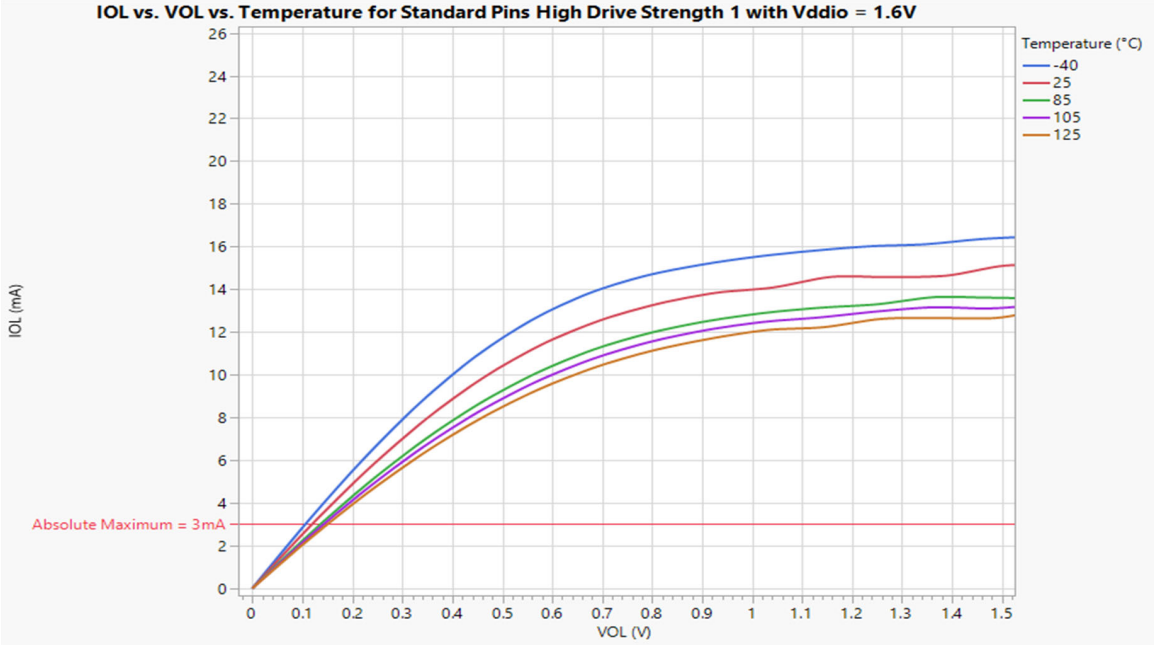

© 2025 Microchip Technology Inc. and its subsidiaries

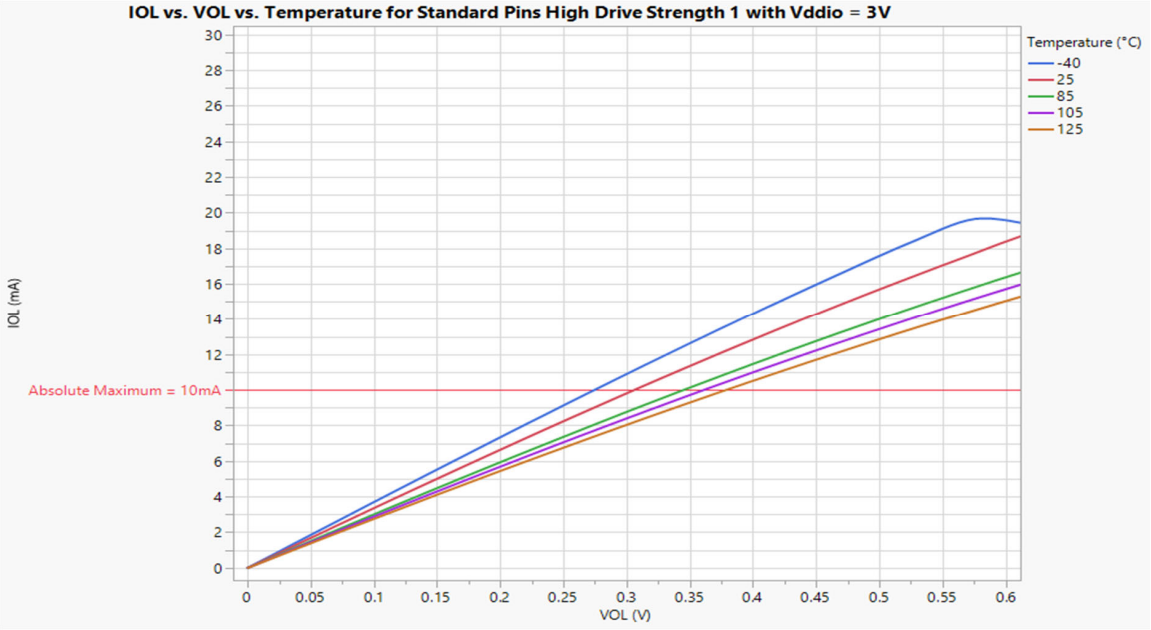

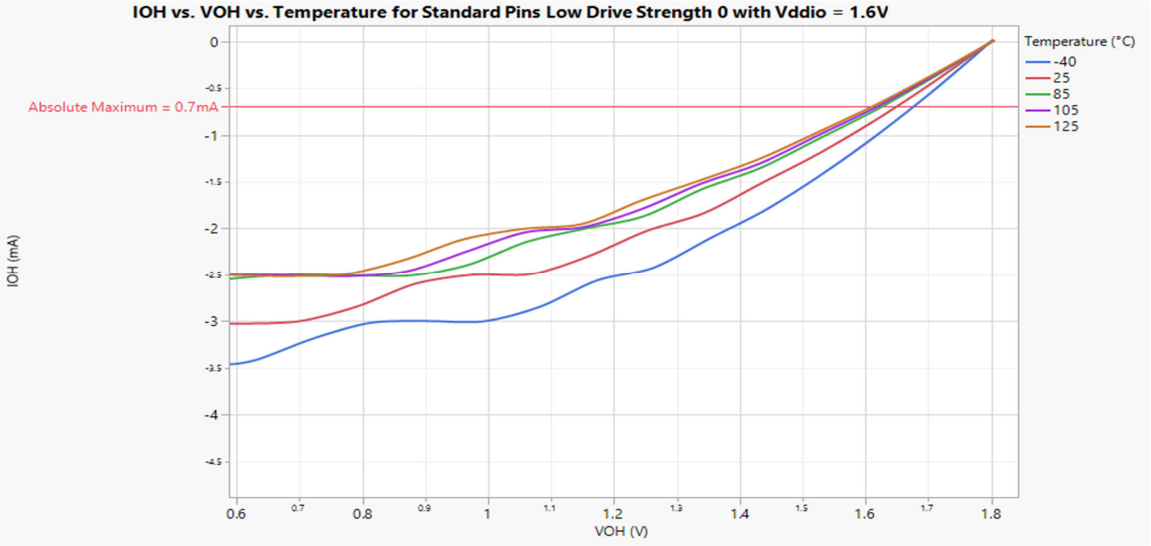

© 2025 Microchip Technology Inc. and its subsidiaries

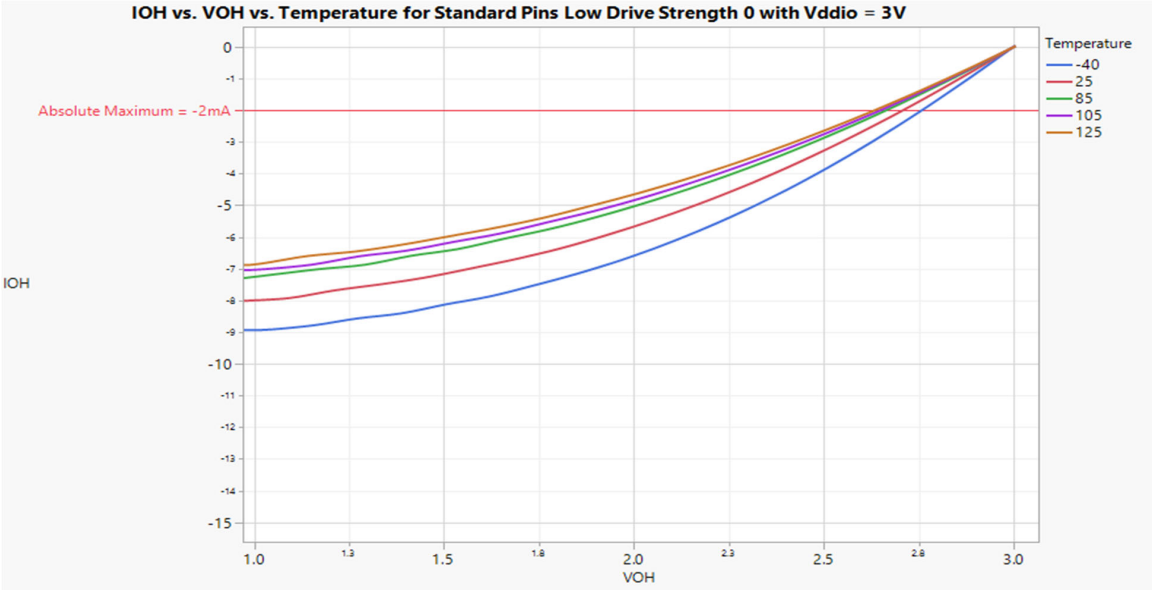

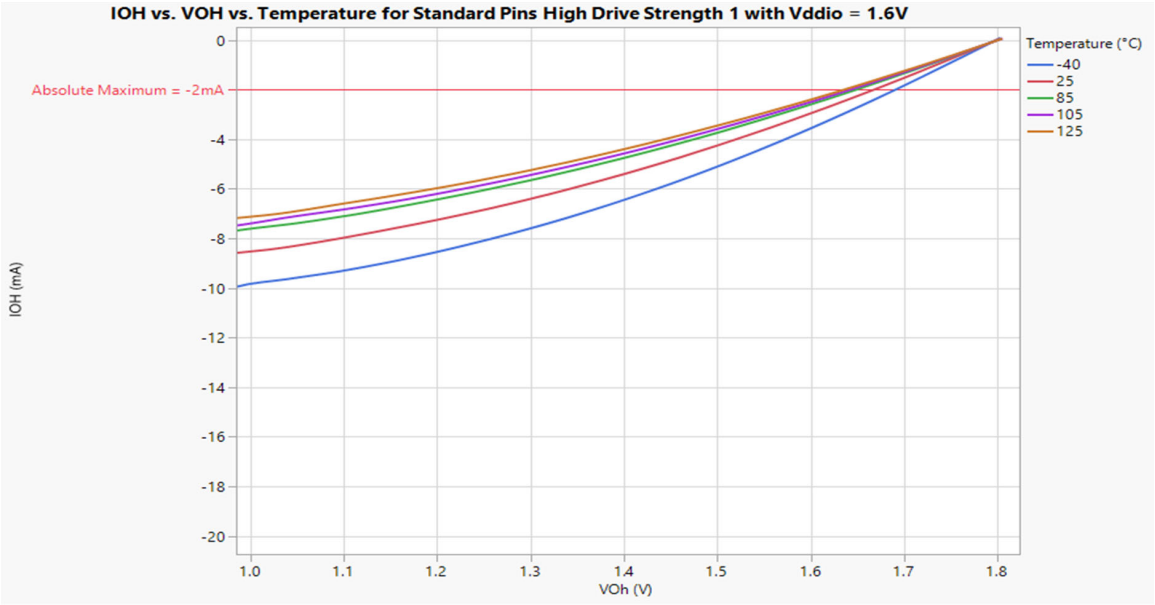

© 2025 Microchip Technology Inc. and its subsidiaries

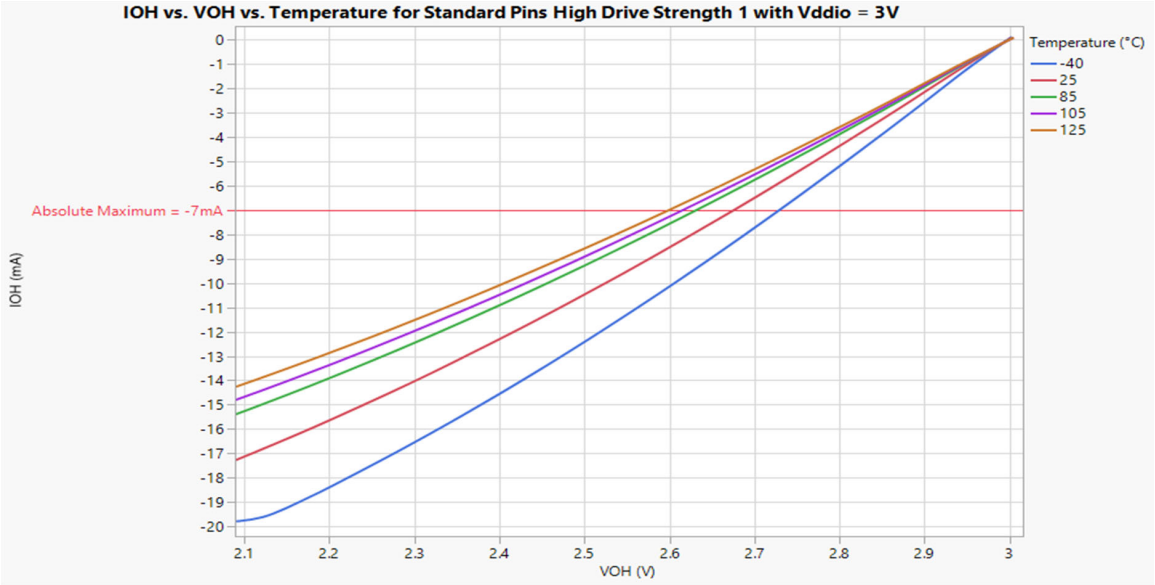

31.11. Internal Voltage Reference Specifications

Table 31-12. Internal Voltage Reference DC Electrical Specifications

DC CHARACTERISTICS			Standard Operating Conditions: VDDIO = AVDD = VDD 1.62V to 3.63V (unless otherwise stated) **Operating Temperature:** **-40°C ≤ TA ≤ +85°C for Industrial**				
Param. No.	Symbol	Characteristics	Min.	Typ.	Max.	Units	Conditions
VR_1	IREF(1)	Internal Voltage Reference ADC.REFCTRL.REFSEL = INT1V DAC.CTRLB.REFSEL = INT1V	0.98	1	1.02	V	Over full operating temperature range
VR_3			0.99	1	1.01	V	25 °C
VR_9a	ACIREF(2)	Internal Voltage Reference Comparator AC.COMPCTRLn.MUXNEG = Bandgap	1.08	1.1	1.12	V	Over full operating temperature range
VR_9b		Internal Voltage Reference Comparator AC.COMPCTRLn.MUXNEG = Bandgap	1.09	1.1	1.11	V	25 °C

Notes:
1. ADC and DAC reference voltages < 2.4V (i.e., < 500µV/step) is not practical and peripheral performance is not guaranteed.
2. See parameter CMP_23 for Comparator Reference voltage range information.

31.12. Maximum Clock Frequencies

Table 31-13. Maximum Clock Frequencies Electrical Specifications

AC CHARACTERISTICS		Standard Operating Conditions: VDDIO = AVDD = VDD 1.62V to 3.63V (unless otherwise stated) **Operating Temperature:** **-40°C ≤ TA ≤ +85°C for Industrial**		
Param. No.	Symbol	Characteristics	Max.	Units
FCLK_1	fCPU	CPU clock frequency	48	MHz
FCLK_3	fAHB	AHB clock frequency	48	MHz
FCLK_5	fAPBn	APBA, APBB, APBC clock frequency	48	MHz
FCLK_6	fGCLKGEN[0:7]	GCLK clock frequency output	48	MHz

© 2025 Microchip Technology Inc. and its subsidiaries

Table 31-13. Maximum Clock Frequencies Electrical Specifications (continued)

AC CHARACTERISTICS		Standard Operating Conditions: VDDIO = AVDD = VDD 1.62V to 3.63V (unless otherwise stated) **Operating Temperature:** **-40°C ≤ TA ≤ +85°C for Industrial**		
Param. No.	**Symbol**	**Characteristics**	**Max.**	**Units**
FCLK_11	fGCLK_DFLL48M_REF	DFLL 48M reference clock frequency	35.1	KHz
FCLK_13	fGCLK_EIC	EIC input clock frequency	48	MHz
FCLK_19	fGCLK_EVSYS_CHANNELx	EVSYS channel x input clock frequency	48	MHz
FCLK_21	fGCLK_SERCOMx_SLOW	Common SERCOM slow input clock frequency	48	MHz
FCLK_23	fGCLK_SERCOMx_CORE	SERCOMx input clock frequency	48	MHz
FCLK_37	fGCLK_TCx	TCx input clock frequency	48	MHz
FCLK_45	fGCLK_GCLKINx	External GCLKx input clock frequency	48	MHz
FCLK_48	fGCLK_AC_DIG	Analog comparator peripheral module digital input clock frequency	48	MHz
FCLK_49	fGCLK_AC_ANA	Analog comparator peripheral module analog input clock frequency	64	KHz
FCLK_51	fGCLK_ADCx	ADCx input clock frequency	48	MHz
FCLK_53	fGCLK_DAC	DAC input clock frequency	48	MHz
FCLK_55	fGCLK_PTC	PTC input clock frequency	48	MHz

31.13. Peripheral Touch Controller (PTC) Electrical Specifications

Table 31-14. Peripheral Touch Controller AC Electrical Specifications

AC CHARACTERISTICS				Standard Operating Conditions: VDDIO = AVDD = VDD 1.62V to 3.63V (unless otherwise stated) **Operating Temperature:** **-40°C ≤ TA ≤ +85°C for Industrial**				
Param. No.	**Symbol**	**Characteristics**		**Min.**	**Typ.**	**Max.**	**Units**	**Conditions**
PTC_1	CLOAD SC[1]	Self Capacitance Mode (PTC Channel Y0 - Y15)	Y0	—	—	15	pF	Maximum sensor load capacitance
			Y1	—	—	22	pF	
			Y2	—	—	18	pF	
			Y3 - 15	—	—	22	pF	
PTC_3	CLOAD MC[1]	Mutual Capacitance Mode (PTC Channel Y0 - Y15)		—	—	29	pF	
PTC ANALOG GAIN SETTINGS[2]								
PTC_5	PTCGAIN[2, 3]	Analog Gain Settings	Gain_1	—	1.0	—	—	—
			Gain_2	—	2.0	—		—
			Gain_4	—	3.8	—		—
			Gain_8	—	7.8	—		—
			Gain_16	—	12.8	—	—	—

Notes:

1. Maximum capacitive load that the PTC circuitry can compensate for each channel.
2. Analog Gain is a parameter of the Touch Library. Refer to the “Touch Library Peripheral Touch Controller User’s Guide”.
3. GAIN_16 and GAIN_32 settings are not recommended, otherwise the PTC measurements might get unstable.

© 2025 Microchip Technology Inc. and its subsidiaries

31.14. XOSC Electrical Specifications

Table 31-15. External Crystal Oscillator and Clock AC Electrical Specifications[1]

AC CHARACTERISTICS			Standard Operating Conditions: VDDIO = AVDD = VDD 1.62V to 3.63V (unless otherwise stated) **Operating temperature:** **-40°C ≤ TA ≤ +85°C for Industrial**				
Param. No.	**Symbol**	**Characteristics**	**Min.**	**Typ.**	**Max.**	**Units**	**Conditions**
XOSC_1	FOSC_XOSC	XOSC Crystal Frequency	0.4	—	32	MHz	XOSC.XTALEN = 1 XIN, XOUT Primary Oscillator
XOSC_1A	TOSC	TOSC = 1/FOSC_XOSC	31.25	—	2500	ns	See parameter XOSC1 for FOSC_XOSC value
XOSC_2	XOSC_ST[1]	XOSC Crystal Stabilisation Time	—	15600	51000[3]	TOSC	Crystal stabilization time only, not Oscillator Ready. CL = 20 pF, XOSC.GAIN = 0, 1, 2, 3, 4
XOSC_3	CXIN	XOSC XIN parasitic pin capacitance	—	6.1	—	pF	—
XOSC_5	CXOUT	XOSC XOUT parasitic pin capacitance	—	3.3	—	pF	—
XOSC_11	CLOAD[2]	XOSC Crystal FOSC = 0.455 MHz	—	—	100	pF	—
XOSC_13		XOSC Crystal FOSC = 2 MHz	—	—	20	pF	—
XOSC_15		XOSC Crystal FOSC = 4 MHz	—	—	20	pF	—
XOSC_17		XOSC Crystal FOSC = 8 MHz	—	—	20	pF	—
XOSC_19		XOSC Crystal FOSC = 16 MHz	—	—	20	pF	—
XOSC_20		XOSC Crystal FOSC = 32 MHz	—	—	18	pF	—
XOSC_21	ESR	XOSC Crystal FOSC = 0.455 MHz	—	—	5.6K	Ω	CL = 100 pF, XOSC.GAIN = 0
XOSC_23		XOSC Crystal FOSC = 2 MHz	—	—	330	Ω	CL = 20 pF, XOSC.GAIN = 0
XOSC_25		XOSC Crystal FOSC = 4 MHz	—	—	240	Ω	CL = 20 pF, XOSC.GAIN = 1
XOSC_27		XOSC Crystal FOSC = 8 MHz	—	—	105	Ω	CL = 20 pF, XOSC.GAIN = 2
XOSC_29		XOSC Crystal FOSC = 16 MHz	—	—	60	Ω	CL = 20 pF, XOSC.GAIN = 3
XOSC_30		XOSC Crystal FOSC = 32 MHz	—	—	55	Ω	CL = 18 pF, XOSC.GAIN = 4
XOSC_35	FOSC_XCLK	Ext Clock Oscillator Input Freq (the XIN pin)	0.4	—	32	MHz	XOSC.XTALEN = 0
XOSC_37	XCLK_DC	Ext Clock Oscillator (the XIN pin) Duty Cycle	40	50	60	%	XOSC.XTALEN = 0

© 2025 Microchip Technology Inc. and its subsidiaries

Table 31-15. External Crystal Oscillator and Clock AC Electrical Specifications[1] (continued)

AC CHARACTERISTICS			Standard Operating Conditions: VDDIO = AVDD = VDD 1.62V to 3.63V (unless otherwise stated) **Operating temperature:** **-40°C ≤ TA ≤ +85°C for Industrial**				
Param. No.	Symbol	Characteristics	Min.	Typ.	Max.	Units	Conditions

Notes:

1. This is for guidance only. A major component of crystal start-up time is based on the second party crystal MFG parasitics that are outside the scope of this specification. If this is a major concern, the customer would need to characterize this based on their design choices.
2. The Crystal Load Capacitor calculation is as follows:
   - Standard PCB trace capacitance = 1.5 pF per 12.5 mm (0.5 inches) (i.e., PCB STD TRACE W = 0.175 mm, H = 36 µm, T = 113 µm)
   - XTAL PCB capacitance typical therefore ~= 2.5 pF for a tight PCB XTAL layout
   - For C_{XIN} and C_{XOUT} within 4 pF of each other, Assume CXTAL_EFF = ((C_{XIN}+C_{XOUT}) / 2)
     Note: Averaging C_{XIN} and C_{XOUT} will effect final calculated C_{LOAD} value by less than 0.25 pF.

     Notes:
     Equation 1:
     MFG C_{LOAD} Spec = {([C_{XIN} + C1] * [C_{XOUT} + C2]) / [C_{XIN} + C1 + C2 + C_{XOUT}] } + estimated oscillator PCB stray capacitance
     - Assuming C1 = C2 and C_{XIN} ~= C_{XOUT}, the formula can be further simplified and restated to solve for C1 and C2 by:

     Equation 2 (Simplified version of equation 1):
     C1 = C2 = ((2 * MFG C_{LOAD} spec) - C_{XTAL_EFF} - (2 * PCB capacitance))
     For example:
     - XTAL Mfg C_{LOAD} Data Sheet Specification = 12 pF
     - PCB XTAL trace Capacitance = 2.5 pF
     - C_{XIN} pin = 6.5 pF, C_{XOUT} pin = 4.5 pF, therefore C_{XTAL_EFF} = ((C_{XIN}+C_{XOUT}) / 2)

     C_{XTAL_EFF} = ((6.5 + 4.5)/2) = 5.5 pF
     C1 = C2 = ((2 * MFG C_{LOAD} spec) - C_{XTAL_EFF} - (2 * PCB capacitance))
     C1 = C2 = (24 - 5.5 - (2 * 2.5))
     C1 = C2 = 13.5 pF (Always rounded down)
     C1 = C2 = 13 pF (i.e., for hypothetical example crystal external load capacitors)
     User C1 = C2 = 13 pF ≤ C_{LOAD}(max) spec
3. User Selectable in XOSC.STARTUP.

Figure 31-1. XTAL

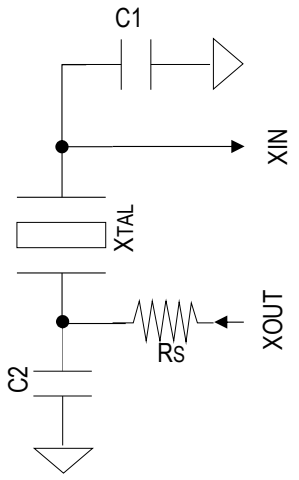

© 2025 Microchip Technology Inc. and its subsidiaries

31.15. XOSC32K Electrical Specifications

Table 31-16. 32.768 kHz Crystal Oscillator (XOSC32K) AC Electrical Specifications

AC CHARACTERISTICS			Standard Operating Conditions: VDDIO = AVDD = VDD 1.62V to 3.63V (unless otherwise stated) **Operating temperature:** **-40°C ≤ TA ≤ +85°C for Industrial**				
Param. No.	Symbol	Characteristics	Min.	Typ.	Max.	Units	Conditions
XOSC32_1	FOSC_XOSC32	XOSC32 Oscillator Crystal Frequency	—	32.768	—	kHz	XIN32, XOUT32 Secondary Osc, ±100 ppm maximum
XOSC32_3	CXIN32	XOSC32 XIN32 parasitic pin capacitance	—	3.2	—	pF	—
XOSC32_5	CXOUT32	XOSC32 XOUT32 parasitic pin capacitance	—	3.5	—	pF	—
XOSC32_11	CLOAD_X32(2)	32.768kz Crystal Load Capacitance	—	—	12.5	pF	XOSC32K.XTALEN = 1 XOSC32K.ENABLE = 1
XOSC32_12			—	—	—	—	—
XOSC32_13	ESR_X32	32.768 kHz Crystal ESR	—	—	100	KΩ	XOSC32K.XTALEN = 1 XOSC32K.ENABLE = 1 CLOAD = 12.5 pF
XOSC32_15	TOSC32	TOSC32 = 1/ FOSC_XOSC32	—	30.5176	—	µs	See parameter XOSC32_1 for FOSC_XOSC32 value
XOSC32_17	XOSC32_ST(1)	XOSC32 Crystal Stabilization Time	—	28000	(3)	TOSC	Crystal stabilization time only not Oscillator Ready
XOSC32_19	FOSC_XCLK32	Ext Clock Oscillator Input Freq (the XIN32 pin)	—	32.768	—	kHz	XOSC32K.XTALEN = 0, ±100 ppm maximum
XOSC32_21	XCLK32_DC	Ext Clock Oscillator Duty Cycle	40	50	60	%	XOSC32K.XTALEN = 0

© 2025 Microchip Technology Inc. and its subsidiaries

Table 31-16. 32.768 kHz Crystal Oscillator (XOSC32K) AC Electrical Specifications (continued)

AC CHARACTERISTICS			Standard Operating Conditions: VDDIO = AVDD = VDD 1.62V to 3.63V (unless otherwise stated) **Operating temperature:** **-40°C ≤ TA ≤ +85°C for Industrial**				
Param. No.	Symbol	Characteristics	Min.	Typ.	Max.	Units	Conditions

Notes:

1. This is for guidance only. A major component of crystal start-up time is based on the second party crystal MFG parasitics that are outside the scope of this specification. If this is a major concern the customer would need to characterize this based on their design choices.
2. The Crystal Load Capacitor calculation is as follows:
   - Standard PCB trace capacitance = 1.5 pF per 12.5 mm (0.5 inches) (i.e., PCB STD TRACE W = 0.175 mm, H = 36 µm, T = 113 µm)
   - XTAL PCB capacitance typical, therefore ~= 2.5 pF for a tight PCB XTAL layout
   - For C_{XIN32} and C_{XOUT32} within 4 pF of each other, assume CXTAL_EFF = ((CXIN32+CXOUT32) / 2)
     Note: Averaging C_{XIN32} and C_{XOUT32} will effect final calculated C_{LOAD} value by less than 0.25 pF.

     Equation 1:

     MFG C_{LOAD} Spec = {([C_{XIN32} + C1] * [C_{XOUT32} + C2]) / [C_{XIN32} + C1 + C2 + C_{XOUT32}] } + estimated oscillator PCB stray capacitance
     - Assuming C1 = C2 and C_{XIN32} ~= C_{XOUT32}, the formula can be further simplified and restated to solve for C1 and C2 by:

     Equation 2 (Simplified Equation 1):

     C1 = C2 = ((2 * MFG C_{LOAD} spec) - C_{XTAL_EFF} - (2 * PCB capacitance))

     For example:
     - XTAL Mfg C_{LOAD} Data Sheet Specification = 12 pF
     - PCB XTAL Trace Capacitance = 2.5 pF
     - C_{XIN32} pin = 6.5 pF, C_{XOUT32} pin = 4.5 pF. Therefore, C_{XTAL_EFF} = ((C_{XIN32}+C_{XOUT32}) / 2)

     C_{XTAL_EFF} = ((6.5 + 4.5)/2) = 5.5 pF

     C1 = C2 = ((2 * MFG C_{LOAD} spec) - C_{XTAL_EFF} - (2 * PCB capacitance))

     C1 = C2 = (24 - 5.5 - (2 * 2.5))

     C1 = C2 = (24 - 5.5 - 5)

     C1 = C2 = 13.5 pF (always rounded down)

     C1 = C2 = 13 pF (i.e., for hypothetical example crystal external load capacitors)

     User C1 = C2 = 13 pF ≤ C_{LOAD}_X32(max) spec
3. User Selectable in XOSC32K.STARTUP.

Figure 31-2. XTAL

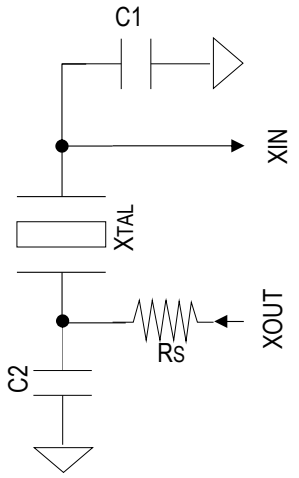

© 2025 Microchip Technology Inc. and its subsidiaries

31.16. OSC32K Electrical Specifications

Table 31-17. Internal 32.768 kHz RC Oscillator (OSC32K) AC Electrical Specifications

AC CHARACTERISTICS			Standard Operating Conditions: VDDIO = AVDD = VDD 1.62V to 3.63V (unless otherwise stated) **Operating temperature:** **-40°C ≤ TA ≤ +85°C for Industrial**				
Param. No.	Symbol	Characteristics	Min.	Typ.	Max.	Units	Conditions
OSC32K_1	FOSC_OSC32K	Output Frequency	—	32.768	—	kHz	TA = 25 °C , AVDD = 3.3V
OSC32K_3a	OSC32K_ACC	Accuracy	-4	—	4	%	TA = 25°C, 1.62V ≤ AVDD ≤ 3.63V
OSC32K_3b			-1.5	—	1.5	%	TA = 25°C, AVDD = 3.3V
OSC32K_3c			-13	—	6	%	-40°C ≤ TA ≤ +85°C, 1.62V ≤ AVDD ≤ 3.63V
OSC32K_9	OSC32K_Duty	OSC32 Duty Cycle	—	50	—	%	TA = 25 °C , AVDD = 3.3V

31.17. OSC8M Electrical Specifications

Table 31-18. Internal 8 MHz RC Oscillator (OSC8M) AC Electrical Specifications

AC CHARACTERISTICS			Standard Operating Conditions: VDDIO = AVDD = VDD 1.62V to 3.63V (unless otherwise stated) **Operating temperature:** **-40°C ≤ TA ≤ +85°C for Industrial**				
Param. No.	Symbol	Characteristics	Min.	Typ.	Max.	Units	Conditions
OSC8M_1	FOSC8M	OSC8M Oscillator Frequency	7.8	—	8.16	MHz	-40°C ≤ TA ≤ +85°C 1.62V ≤ AVDD ≤ 3.63V
			7.94	—	8.06	MHz	25°C, 3.3V
			7.92	—	8.08	MHz	25°C 1.62V ≤ AVDD ≤ 3.63V
OSC8M_3	OSC8M_Duty	OSC8M Oscillator Duty Cycle	40	—	60	%	—
OSC8M_5	OSC8M_ST	OSC8M Oscillator Start-up Time	—	2.1	3	µs	—

31.18. OSCULP32K Electrical Specifications

Table 31-19. Ultra-Low Power Internal 32 kHz RC Oscillator (OSCULP32K) AC Electrical Specifications

AC CHARACTERISTICS			Standard Operating Conditions: VDDIO = AVDD = VDD 1.62V to 3.63V (unless otherwise stated) **Operating temperature:** **-40°C ≤ TA ≤ +85°C for Industrial**				
Param. No.	Symbol	Characteristics	Min.	Typ.	Max.	Units	Conditions
ULPRC32K_1	FOSC_ULPRC32K	Output Frequency	—	32.768	—	kHz	TA = 25 °C AVDD = 3.3V
ULPRC32K_3	ULPRC32K_ACC	Accuracy	-22	—	16	%	-40°C ≤ TA ≤ +85°C 1.62V ≤ AVDD ≤ 3.63V
			-4.5	—	5.5		TA = 25 °C 1.62V ≤ AVDD ≤ 3.63V
ULPRC32K_9	ULPRC_Duty Cycle	Duty Cycle	—	50	—	%	—

© 2025 Microchip Technology Inc. and its subsidiaries

31.19. DFLL48M Electrical Specifications

Table 31-20. Digital Frequency Locked Loop (DFLL48M) Electrical Specifications

AC CHARACTERISTICS			Standard Operating Conditions: VDDIO = AVDD = VDD 1.62V to 3.63V (unless otherwise stated) **Operating temperature:** **-40°C ≤ TA ≤ +85°C for Industrial**				
Param. No.	Symbol	Characteristics	Min.	Typ.	Max.	Units	Conditions
DFLL48MHz (Closed Loop)(1,2,3)							
DFLL_11	DFLL_CL_FI(2)	DFLL Closed- Loop Input Frequency Range	0.732	32.768	35.1	KHz	—
DFLL_13	DFLL_CL_FOUT	DFLL Closed- Loop Clock Frequency	47	48	49	MHz	XOSC32 32.768 kHz PPM ≤ 100, DFLLMUL = 1464 DFLLVAL.FINE = 512
DFLL_15	DFLL_CL_Jitter	DFLL Period Jitter Pk-to-Pk	—	—	5.0	%	VDDIO = 3.3V, Closed-Loop mode, XOSC32 32.768 kHz PPM ≤ 100 DFLLMUL = 1464 DFLLVAL.FINE = 512
DFLL_21	DFLL_CL_SRT(3)	DFLL Closed- Loop Mode/Lock Time	—	—	1.5	ms	VDDIO = 3.3V, Closed-Loop mode, XOSC32 32.768 kHz PPM ≤ 100

Notes:

1. In Closed-Loop mode the DFLL can use a variety of clock sources. The DFLL can be trimmed using the DFLLMUL register.
2. To ensure that the device stays within the maximum allowed clock frequency, any reference clock for DFLL in close loop must be within a 2% error accuracy.
3. DFLLMUL = 1464, DFLLVAL.FINE = 512, DFLLCTRL.BPLCKC = 1: only fine value change, coarse value locked to the reset value.
   DFLLCTRL.QLDIS = 0: quick lock enable, DFLLCTRL.CCDIS = 1: Enabling chill cycles might double the lock time.
   DFLLMUL.FSTEP = 10: maximum fine step size, divided or dividing into two parts, search. 10 is a optimum value.

31.20. Digital-to-Analog Controller (DAC) Specifications

Table 31-21. DACx AC Electrical Specifications

AC CHARACTERISTICS			Standard Operating Conditions: VDDIO = AVDD = VDD 1.62V to 3.63V (unless otherwise stated) **Operating Temperature::** **-40°C ≤ TA ≤ +85°C for Industrial**				
Param. No.	Symbol	Characteristics	Min.	Typ.	Max.	Units	Conditions
DAC_1	DRES	DAC Resolution	—	—	10	Bits	—
DAC_3	DCLK	Internal DAC Clock Frequency (GCLK_DAC)	—	—	FCLK_53	MHz	—
DAC_5	DSAMP	DAC Sampling Rate	—	—	350	Ksps	+/-4 LSB of final value for step size ≤ 100 LSb at CLOAD and RLOAD

© 2025 Microchip Technology Inc. and its subsidiaries

Table 31-21. DACx AC Electrical Specifications (continued)

AC CHARACTERISTICS				Standard Operating Conditions: VDDIO = AVDD = VDD 1.62V to 3.63V (unless otherwise stated) **Operating Temperature::** **-40°C ≤ TA ≤ +85°C for Industrial**				
Param. No.	Symbol	Characteristics		Min.	Typ.	Max.	Units	Conditions
DAC_7	VOUT	Output Voltage Linear Range		AGND+0.1V	—	AVDD-0.1V	V	External Pin (Buffered) VREF = AVDD at CLOAD and RLOAD
				AGND+0.1V	—	VREF	V	External Pin (Buffered) at CLOAD and RLOAD (VREF < (AVDD-100 mV))
				AGND	—	VREF	V	Internal connection to another module (for example, AC) (No buffer)
DAC_9	VREF(1)	DAC Reference Input Option	INT1V CTRLB.REFSEL = 0x0	Specification VR_1 to VR_3			V	Internal Reference
			AVDD CTRLB.REFSEL = 0x1	2.4	—	AVDD	V	VREF = AVDD
			VREFA pin CTRLB.REFSEL = 0x2	2.4	—	AVDD - 0.6V	V	External Reference VREFA (buffered) VREF bypass Cap = 4.7 µF // 100 nF
DAC_11	CLOAD	DAC Out maximum load to meet VOUT and TSET		—	—	100	pF	—
DAC_13	RLOAD	DAC Out maximum load to meet VOUT and TSET		5	—	—	KΩ	—
DAC_15	Tset	DAC Settling Time		—	—	1	µs	+/-4 LSB of final value for step size ≤ 4 LSb at CLOAD and RLOAD w/ AVDD = 3.3V
DAC_17	Tset_FS	DAC Full Scale Settling Time		—	—	2.85	µs	+/-4 LSB of final value for step size from 10% to 90% at CLOAD and RLOAD w/ AVDD = 3.3V
SINGLE ENDED MODE(1,2,3)								
SDAC_19	INL(3)	Integral Non Linearity		-2.0	—	2.0	LSB	CTRLB.REFSEL = 0x1 VREF = AVDD = 3.3V w/ CLOAD and RLOAD
				-1.3	—	1.3	LSB	CTRLB.REFSEL = 0x2 AVDD = 3.3V VREF = VREFA w/ CLOAD and RLOAD
SDAC_21	DNL(3)	Differential Non Linearity		-0.5	—	0.5	LSB	CTRLB.REFSEL = 0x1 VREF = AVDD = 3.3V w/ CLOAD and RLOAD
				-0.7	—	0.7	LSB	CTRLB.REFSEL = 0x2 AVDD = 3.3V VREF = VREFA w/ CLOAD and RLOAD

© 2025 Microchip Technology Inc. and its subsidiaries

Table 31-21. DACx AC Electrical Specifications (continued)

AC CHARACTERISTICS			Standard Operating Conditions: VDDIO = AVDD = VDD 1.62V to 3.63V (unless otherwise stated) **Operating Temperature::** **-40°C ≤ TA ≤ +85°C for Industrial**				
Param. No.	Symbol	Characteristics	Min.	Typ.	Max.	Units	Conditions
SDAC_23	GERR(3)	Gain Error	-13.8	—	-4.6	LSB	CTRLB.REFSEL = 0x1 VREF = AVDD = 3.3V w/ CLOAD and RLOAD
			-5.0	—	-0.2	LSB	CTRLB.REFSEL = 0x2 AVDD = 3.3V VREF = VREFA w/ CLOAD and RLOAD
SDAC_25	EOFF(3)	Offset Error	-3.1	—	3.1	LSB	CTRLB.REFSEL = 0x1 VREF = AVDD = 3.3V w/ CLOAD and RLOAD
			-4.5	—	4.5	LSB	CTRLB.REFSEL = 0x2 AVDD = 3.3V VREF = VREFA w/ CLOAD and RLOAD

Notes:

1. DAC functional device operation with either internal or external VREF < 2.4V is guaranteed, but not characterized. DAC will function, but with degraded performance. DAC accuracy is limited by users application noise or accuracy on AVDD, AGND, and VREF accuracy/drift.
2. 10-bit mode.
3. Over VOUT range defined by the DAC_7 parameter.

31.21. Analog-to-Digital Controller (ADC) Specifications

Table 31-22. ADC AC Electrical Specifications

AC CHARACTERISTICS			Standard Operating Conditions: VDDIO = AVDD = VDD 1.62V to 3.63V (unless otherwise stated) **Operating Temperature:** **-40°C ≤ TA ≤ +85°C for Industrial**				
Param. No.	Symbol	Characteristics	Min.	Typ.	Max.	Units	Conditions
Device Supply							
ADC_1	AVDD	ADC Module Supply	AVDD(min.)	—	AVDD(max.)	V	VDDIO = AVDD
Reference Inputs							
ADC_3	VREF(1)	ADC Reference Voltage	Spec VR_1 to VR_3			V	VREF = INT1V (CTRL.REFSEL = 0x0)
			0.99*(AVDD/1.48)	AVDD/1.48	1.01*(AVDD/1.48)	V	VREF = INTVCC0 (REFCTRL.REFSEL = 0x1)
			0.99*(AVDD/2)	AVDD/2	1.01*(AVDD/2)	V	VREF = INTVCC1 (REFCTRL.REFSEL = 0x2) only for AVDD >2.0V
			2.4	—	AVDD-0.6V	V	AVDD ≥ VREF + 0.6V VREF = VREFA pin (REFCTRL.REFSEL = 0x3) VREF = VREFB pin (REFCTRL.REFSEL = 0x4)
Analog Input Range							

© 2025 Microchip Technology Inc. and its subsidiaries

Table 31-22. ADC AC Electrical Specifications (continued)

AC CHARACTERISTICS			Standard Operating Conditions: VDDIO = AVDD = VDD 1.62V to 3.63V (unless otherwise stated) **Operating Temperature:** **-40°C ≤ TA ≤ +85°C for Industrial**				
Param. No.	Symbol	Characteristics	Min.	Typ.	Max.	Units	Conditions
ADC_7	AFS	Full-Scale Analog Input Signal Range	0	—	VREF/Gain	V	Single-Ended Mode
ADC_9			-VREF/Gain	—	VREF/Gain	V	Differential Mode
ADC_10	VCMIN	Input common mode voltage	0	—	0.7*AVDD + VREF/4 - 0.75	V	Single-Ended Mode
			VREF/4 - 0.05*AVDD-0.1	—	0.95*AVDD + VREF/4 - 0.75	V	Differential Mode if abs (VIN) > VREF/4
			0.2*AVDD-0.1	—	1.2*AVDD - 0.75	V	Differential Mode if abs (VIN) < VREF/4
ADC_11	TSETTLING	ADC Stabilization Time	—	10	—	µs	CTRLA.ENABLE = 1

Note:

1. ADC functional device operation with either internal or external VREF <2.4V is functional, but not characterized. ADC will function, but with degraded accuracy of approximately ~((0.06 * 2n)/VREF) LSB's over full scale range, where n=#bits. ADC accuracy is limited by internal VREF accuracy + drift, MCU generated noise plus users application noise or accuracy on AVDD, AGND.

Table 31-23. ADC Single-Ended Mode AC Electrical Specifications

AC CHARACTERISTICS			Standard Operating Conditions: VDDIO = AVDD = VDD 1.62V to 3.63V (unless otherwise stated) **Operating temperature:** **-40°C ≤ TA ≤ +85°C for Industrial**				
Param. No.	Symbol	Characteristics	Min.	Typ.	Max.	Units	Conditions
SINGLE-ENDED MODE ADC Accuracy (4, 5)							
SADC_11	Res	Resolution	8	—	12	bits	Selectable 8-bit, 10-bit, 12-bit Resolution Ranges
SADC_13	ENOB(1, 2)	Effective Number of bits	9.1	9.8	—	bits	REFCTRL.REFSEL= 0x3 or 0x4 VREFA or VREFB >= 2.4V REFCTRL.REFCOMP = 0x1
SADC_19	INL	Integral Non-linearity	-3	—	3	LSB	REFCTRL.REFSEL= 0x3 or 0x4 VREFA or VREFB >= 2.4V REFCTRL.REFCOMP = 0x1
SADC_25	DNL	Differential Non linearity	-0.9	—	1	LSB	REFCTRL.REFSEL= 0x3 or 0x4 VREFA or VREFB >= 2.4V REFCTRL.REFCOMP = 0x1
SADC_31	GERR	Gain Error	-7	—	7	LSB	REFCTRL.REFSEL = 0x3 or 0x4 VREFA or VREFB >= 2.4V REFCTRL.REFCOMP = 0x1
SADC_37	EOFF	Offset Error	-26	—	26	LSB	REFCTRL.REFSEL= 0x3 or 0x4 VREFA or VREFB >= 2.4V REFCTRL.REFCOMP = 0x1
SADC_43	TUE	Total Unadjusted Error	1.6	—	21.7	LSB	REFCTRL.REFSEL= 0x3 or 0x4 VREFA or VREFB >= 2.4V REFCTRL.REFCOMP = 0x1
SINGLE-ENDED MODE ADC Dynamic Performance(1, 2, 4, 5)							

© 2025 Microchip Technology Inc. and its subsidiaries

Table 31-23. ADC Single-Ended Mode AC Electrical Specifications (continued)

AC CHARACTERISTICS			Standard Operating Conditions: VDDIO = AVDD = VDD 1.62V to 3.63V (unless otherwise stated) **Operating temperature:** **-40°C ≤ TA ≤ +85°C for Industrial**				
Param. No.	Symbol	Characteristics	Min.	Typ.	Max.	Units	Conditions
SADC_49	SINAD	Signal-to-Noise and Distortion	56.5	—	—	dB	REFCTRL.REFSEL= 0x3 or 0x4 VREFA or VREFB >= 2.4V REFCTRL.REFCOMP = 0x1
SADC_51	SNR	Signal-to-Noise ratio	58.7	—	—		REFCTRL.REFSEL= 0x3 or 0x4 VREFA or VREFB >= 2.4V REFCTRL.REFCOMP = 0x1
SADC_53	SFDR	Spurious Free Dynamic Range	71.4	—	—		REFCTRL.REFSEL= 0x3 or 0x4 VREFA or VREFB >= 2.4V REFCTRL.REFCOMP = 0x1
SADC_55	THD(3)	Total Harmonic Distortion	—	—	-60.5		REFCTRL.REFSEL= 0x3 or 0x4 VREFA or VREFB >= 2.4V REFCTRL.REFCOMP = 0x1

Notes:

1. Characterized with an analog input sine wave = 40 kHz sine wave.
2. Sine wave peak amplitude = 95% ADC_ Full Scale amplitude input with 12-bit resolution.
3. Value taken over 7 harmonics.
4. ADC is configured in 12 bits mode, All registers are at the reset default value unless otherwise stated.
5. The ADC channels are powered from AVDD except channels on the PA08, PA09, PA10, PA11 pins, which are powered from VDDIO. The ADC specifications are only applicable to the channels powered from AVDD. Performances of the channels powered from VDDIO are dependent on the activity of the system and therefore application dependent.

Table 31-24. ADC Differential Mode AC Electrical Specifications

AC CHARACTERISTICS			Standard Operating Conditions: VDDIO = AVDD = VDD 1.62V to 3.63V (unless otherwise stated) **Operating Temperature:** **-40°C ≤ TA ≤ +85°C for Industrial**				
Param. No.	Symbol	Characteristics	Min.	Typ.	Max.	Units	Conditions
DIFFERENTIAL MODE ADC Accuracy(4, 5)							
DADC_11	Res	Resolution	8	—	12	bits	Selectable 8-bit, 10-bit, 12-bit Resolution Ranges
DADC_13	ENOB(1, 2)	Effective Number of bits	10	10.7	—	bits	REFCTRL.REFSEL= 0x3 or 0x4 VREFA or VREFB >= 2.4V REFCTRL.REFCOMP = 0x1
DADC_19	INL	Integral Non-linearity	-1.7	—	1.7	LSB	REFCTRL.REFSEL= 0x3 or 0x4 VREFA or VREFB >= 2.4V REFCTRL.REFCOMP = 0x1
DADC_25	DNL	Differential Non-linearity	-0.8	—	0.8	LSB	REFCTRL.REFSEL= 0x3 or 0x4 VREFA or VREFB >= 2.4V REFCTRL.REFCOMP = 0x1
DADC_31	GERR	Gain Error	-9	—	3.5	LSB	REFCTRL.REFSEL= 0x3 or 0x4 VREFA or VREFB >= 2.4V REFCTRL.REFCOMP = 0x1

© 2025 Microchip Technology Inc. and its subsidiaries

Table 31-24. ADC Differential Mode AC Electrical Specifications (continued)

AC CHARACTERISTICS			Standard Operating Conditions: VDDIO = AVDD = VDD 1.62V to 3.63V (unless otherwise stated) **Operating Temperature:** **-40°C ≤ TA ≤ +85°C for Industrial**				
Param. No.	Symbol	Characteristics	Min.	Typ.	Max.	Units	Conditions
DADC_37	EOFF	Offset Error	-10	—	10	LSB	REFCTRL.REFSEL= 0x3 or 0x4 VREFA or VREFB >= 2.4V REFCTRL.REFCOMP = 0x1
DADC_43	TUE	Total Unadjusted Error	0.8	—	10.9	LSB	REFCTRL.REFSEL= 0x3 or 0x4 VREFA or VREFB >= 2.4V REFCTRL.REFCOMP = 0x1
DIFFERENTIAL MODE ADC Dynamic Performance(1, 2, 4, 5)							
DADC_49	SINAD	Signal-to-Noise and Distortion	62	—	—	dB	REFCTRL.REFSEL= 0x3 or 0x4 VREFA or VREFB >= 2.4V REFCTRL.REFCOMP = 0x1
DADC_51	SNR	Signal-to-Noise ratio	64.5	—	—		REFCTRL.REFSEL= 0x3 or 0x4 VREFA or VREFB >= 2.4V REFCTRL.REFCOMP = 0x1
DADC_53	SFDR	Spurious Free Dynamic Range	79	—	—		REFCTRL.REFSEL= 0x3 or 0x4 VREFA or VREFB >= 2.4V REFCTRL.REFCOMP = 0x1
DADC_55	THD(3)	Total Harmonic Distortion	—	—	-64.4		REFCTRL.REFSEL= 0x3 or 0x4 VREFA or VREFB >= 2.4V REFCTRL.REFCOMP = 0x1

Notes:

1. Characterized with an analog input sine wave = 40 kHz sine wave.
2. Sine wave peak amplitude = 95% ADC_ Full Scale amplitude input with 12-bit resolution.
3. Value taken over 7 harmonics.
4. ADC is configured in 12 bits mode, All registers are at the reset default value unless otherwise stated.
5. The ADC channels are powered from AVDD except channels on the PA08, PA09, PA10, PA11 pins, which are powered from VDDIO. The ADC specifications are only applicable to the channels powered from AVDD. Performances of the channels powered from VDDIO are dependent on the activity of the system and therefore application dependent.

Table 31-25. ADC Conversion and Sample AC Electrical Requirements

AC CHARACTERISTICS			Standard Operating Conditions: VDDIO = AVDD = VDD 1.62V to 3.63V (unless otherwise stated) **Operating Temperature:** **-40°C ≤ TA ≤ +85°C for Industrial**				
Param. No.	Symbol	Characteristics	Min.	Typ.	Max.	Units	Conditions
ADC Clock Requirements							
ADC_57	TAD	ADC Clock Period	476.2	—	8333.3	ns	
ADC_58	fGCLK_ADCx	ADCx Module GCLK max input freq	—	—	FCLK_51	MHz	
ADC Single-Ended Throughput Rates							

© 2025 Microchip Technology Inc. and its subsidiaries

Table 31-25. ADC Conversion and Sample AC Electrical Requirements (continued)

AC CHARACTERISTICS			Standard Operating Conditions: VDDIO = AVDD = VDD 1.62V to 3.63V (unless otherwise stated) **Operating Temperature:** **-40°C ≤ TA ≤ +85°C for Industrial**				
Param. No.	Symbol	Characteristics	Min.	Typ.	Max.	Units	Conditions
ADC_59	FTP[1] (Single-Ended Mode)	Throughput Rate (Single-Ended)	—	—	300	KSPS	12-bit resolution, Resource ≤ 8,750 Ω, SAMPCTRL.SAMPLEN = 0 CTRLB.FREERUN = 0x1 INPUTCTRL.GAIN = 0x0
			—	—	300		12-bit resolution, Resource ≤ 8,750 Ω, SAMPCTRL.SAMPLEN = 0 CTRLB.FREERUN = 0x0 INPUTCTRL.GAIN = 0x0
			—	—	262.5		12 -bit resolution, Resource ≤ 8,750 Ω, SAMPCTRL.SAMPLEN = 0 CTRLB.FREERUN = 0x0 INPUTCTRL.GAIN = 0x1,0x2 or 0xF
			—	—	233.3		12-bit resolution, Resource ≤ 8,750 Ω, SAMPCTRL.SAMPLEN = 0 CTRLB.FREERUN = 0x0 INPUTCTRL.GAIN = 0x3 or 0x4
ADC Differential Mode Throughput Rates							
ADC_61	FTP[1] (Differential Mode)	Throughput Rate (Differential Mode)	—	—	350	KSPS	12-bit resolution, Resource ≤ 8,750 Ω, SAMPCTRL.SAMPLEN = 0 CTRLB.FREERUN = 0x1 INPUTCTRL.GAIN = 0x0
			—	—	300		12-bit resolution, Resource ≤ 8,750 Ω, SAMPCTRL.SAMPLEN = 0 CTRLB.FREERUN = 0x0 INPUTCTRL.GAIN = 0x0, 0x1 or 0xF
			—	—	262.5		12 -bit resolution, Resource ≤ 8,750 Ω, SAMPCTRL.SAMPLEN = 0 CTRLB.FREERUN = 0x0 INPUTCTRL.GAIN = 0x2 or 0x3
			—	—	233.3		12-bit resolution, Resource ≤ 8,750 Ω, SAMPCTRL.SAMPLEN = 0 CTRLB.FREERUN = 0x0 INPUTCTRL.GAIN = 0x4
ADC Conversion and Sample time							

© 2025 Microchip Technology Inc. and its subsidiaries

Table 31-25. ADC Conversion and Sample AC Electrical Requirements (continued)

AC CHARACTERISTICS			Standard Operating Conditions: VDDIO = AVDD = VDD 1.62V to 3.63V (unless otherwise stated) **Operating Temperature:** **-40°C ≤ TA ≤ +85°C for Industrial**				
Param. No.	Symbol	Characteristics	Min.	Typ.	Max.	Units	Conditions
ADC_63	TSAMP(2)	ADC Sample Time	1	—	—	TAD	12-bit resolution, TAD(min.), External Analog Input Resource ≤ 8,750 Ω
			2	—	—		12-bit resolution, TAD(min.), External Analog Input Resource ≤ 21,000 Ω
			3	—	—		12-bit resolution, TAD(min.), External Analog Input Resource ≤ 33,300 Ω
			4	—	—		12-bit resolution, TAD(min.), External Analog Input Resource ≤ 45,550 Ω
			5	—	—		12-bit resolution, TAD(min.), Ext Analog Input Resource ≤ 57,800 Ω
			6	—	—		12-bit resolution, TAD(min.), External Analog Input Resource ≤ 70,100 Ω
			10	—	—	µs	With temperature sensor as input - INPUTCTRL.MUXPOS = 0x18
			10	—	—		With band gap as input - INPUTCTRL.MUXPOS = 0x19
			0.25				with SCALEDCOREVCC or SCALEDIOVCC as input - INPUTCTRL.MUXPOS = 0x1A ot 0x1B
			3				With DAC as input - INPUTCTRL.MUXPOS = 0x1C
ADC_65	TCNV(1)	Conversion Time (Single-Ended Mode)	7			TAD	12-bit resolution - INPUTCTRL.GAIN = 0x0 (Gain 1x)
			8				12-bit resolution - INPUTCTRL.GAIN = 0x1, 0x2 or 0xF (Gain 0.5x, 2x, 4x)
			9				12-bit resolution - INPUTCTRL.GAIN = 0x3 or 0x4 (Gain 8x, 16x)
ADC_67		Conversion Time (Differential Mode)	6			TAD	12-bit resolution - INPUTCTRL.GAIN = 0x0 (Gain 1x)
			7				12-bit resolution - INPUTCTRL.GAIN = 0x1, 0x2 or 0xF (Gain 0.5x, 2x, 4x)
			8				12-bit resolution - INPUTCTRL.GAIN = 0x3 or 0x4 (Gain 8x, 16x)

© 2025 Microchip Technology Inc. and its subsidiaries

Table 31-25. ADC Conversion and Sample AC Electrical Requirements (continued)

AC CHARACTERISTICS			Standard Operating Conditions: VDDIO = AVDD = VDD 1.62V to 3.63V (unless otherwise stated) **Operating Temperature:** **-40°C ≤ TA ≤ +85°C for Industrial**				
Param. No.	Symbol	Characteristics	Min.	Typ.	Max.	Units	Conditions
ADC_69	CSAMPLE	ADC Internal Sample Cap	—	3.5	4	pF	
ADC_71	RSAMPLE	ADC Internal impedance	—	—	3500	Ω	

Notes:

1. ADC Throughput Rate FTP = ((1 / ((TSAMP + TCNV) * TAD)) / (number of user active analog inputs in use on specific target ADC module)). For additional information, refer to the Table 27-2. Delay Gain.
   - Specification values assume only one AINx channel in use.
2. TSAMP = (((RSAMPLE + RSOURCE) * CSAMPLE * 9.7) / TAD)+1 rounded down to nearest whole integer.
   User SAMPCTRL.SAMPLEN = (2*TSAMP - 1).

31.21.1. Performance with the Averaging Digital Feature

Averaging is a feature which increases the sample accuracy. ADC automatically computes an average value of multiple consecutive conversions. The numbers of samples to be averaged is specified by the Number-of-Samples-to-be-Collected bit group in the Average Control register (AVGCTRL.SAMPLENUM[3:0]) and the averaged output is available in the Result register (RESULT).

Table 31-26. Averaging Feature

Average Number	Conditions	SNR(dB)	SINAD (dB)	SFDR (dB)	ENOB (bits)
1	In Differential mode, 1x gain, AVDD = 3.0V, VREF = 2.4V, 350 ksps T = 25°C	66	65	85	10.5
8		68	66	87	11.4
32		70	67	88	11.6
128		71	67	88	11.7

31.21.2. Performance with the Hardware Offset and Gain Correction

Inherent gain and offset errors affect the absolute accuracy of the ADC. The offset error cancellation is handled by the Offset Correction register (OFFSETCORR) and the gain error cancellation, by the Gain Correction register (GAINCORR). The offset and gain correction value is subtracted from the converted data before writing the Result register (RESULT).

Table 31-27. Offset and Gain Correction Features

Gain Factor	Conditions	Offset Error (mV)	Gain Error (mV)	Total Unadjusted Error (LSB)
0.5x INPUTCTRL.GAIN = 0xF	In Differential mode, AVDD = 3.0V, VREF = 2.4V, 350 ksps T = 25°C	0.25	1	2.4
1x INPUTCTRL.GAIN = 0x0		0.2	0.1	1.5
2x INPUTCTRL.GAIN = 0x1		0.15	-0.15	2.7
8x INPUTCTRL.GAIN = 0x3		-0.05	0.05	3.2
16x INPUTCTRL.GAIN = 0x4		0.1	-0.05	6.1

31.21.3. Inputs and Sample and Hold Acquisition Times

The analog voltage source must be able to charge the Sample-and-Hold (S/H) capacitor in the ADC to achieve maximum accuracy. Seen externally the ADC input consists of a resistor (RSAMPLE) and a capacitor (CSAMPLE). In addition, the source resistance (RSOURCE) must be considered when calculating the required S/H time. The figure below shows the ADC input channel equivalent circuit.

© 2025 Microchip Technology Inc. and its subsidiaries

Figure 31-3. ADC Input

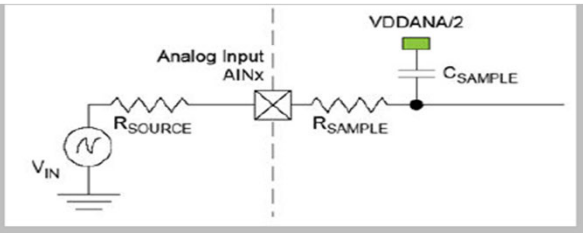

The minimum sampling time $t_{samplehold}$ for a given R_{source} can be found using a general formula:

$$t_{samplehold} \geq (R_{sample} + R_{source}) \times C_{sample} \times (n + 2) \times \ln(2)$$

For 12-bit accuracy, this turns into:

$$t_{samplehold} \geq (R_{sample} + R_{source}) \times C_{sample} \times 9.7$$

31.22. Analog Comparator (AC) Electrical Specifications

Table 31-28. Comparator (AC) Electrical Specifications

AC CHARACTERISTICS			Standard Operating Conditions: VDDIO = AVDD = VDD 1.62V to 3.63V (unless otherwise stated) **Operating temperature:** **-40°C ≤ TA ≤ +85°C for Industrial**				
Param. No.	**Symbol**	**Characteristics**	**Min.**	**Typ**	**Max.**	**Units**	**Conditions**
CMP_1	VIOFF_00	Input Offset Voltage	-25	—	25	mV	COMPCTRLx.HYST = 0x0 COMPCTRLx.SPEED = 0x0
	VIOFF_02		-20	—	20	mV	COMPCTRLx.HYST = 0x0 COMPCTRLx.SPEED = 0x1
CMP_4	VIN	Input Voltage Range	AGND	—	AVDD	V	With respect to AGND and AVDD
CMP_5	VHYST_00	Input Hysteresis Voltage	15	40	75	mV	COMPCTRLx.HYST = 0x1 COMPCTRLx.SPEED = 0x0
	VHYST_01	Input Hysteresis Voltage	10	50	93	mV	COMPCTRLx.HYST = 0x1 COMPCTRLx.SPEED = 0x1
CMP_15	TRESPSS_LS(2)	Small Signal Response Time, low speed	—	300	509	ns	Comparator ref voltage = AVDD/2 COMPCTRLx.HYST = 0x0 Input overdrive = ± 100 mv COMPCTRL.SPEED = 0x0
CMP_17	TRESPSS_HS(2)	Small Signal Response Time, high speed	—	50	78	ns	Comparator ref voltage=AVDD/2 COMPCTRLx.HYST = 0x0 Input overdrive = ± 100mv COMPCTRLx.SPEED = 0x1
CMP_19	COUTVAL_01	Comparator Enabled to Output Valid	—	12	22	µs	Comparator module is configured before enabling it COMPCTRLx.SPEED = 0x0
	COUTVAL_02		—	1	2.6	µs	Comparator module is configured before enabling it COMPCTRLx.SPEED = 0x1
CMP_21	ACIREF	Comparator Internal Band Gap Voltage Reference	VR_9			V	VR_9: Refer to IVREF
CMP_23	CVREFRNG	Comparator Voltage Reference Input Range	(1)			V	See(1)
CMP_25	FGCLK_AC_DIG	Analog comparator peripheral module digital clock freq	—	—	FCLK_48	MHz	See parameter FCLK_48 in Maximum Clock Frequency Table

© 2025 Microchip Technology Inc. and its subsidiaries

Table 31-28. Comparator (AC) Electrical Specifications (continued)

AC CHARACTERISTICS			Standard Operating Conditions: VDDIO = AVDD = VDD 1.62V to 3.63V (unless otherwise stated) **Operating temperature:** **-40°C ≤ TA ≤ +85°C for Industrial**				
Param. No.	Symbol	Characteristics	Min.	Typ	Max.	Units	Conditions
CMP_26	FGCLK_AC_ANA	Analog comparator peripheral module analog clock freq	16	32	FCLK_49	KHz	See parameter FCLK_49 in Maximum Clock Frequency Table

Notes:

1. Comparator Reference voltage cannot exceed: (VIN(max) - VIOFF(max) - CMP_5(max) - 50 mV) ≥ CMP_23 ≥ (VIN(min) + abs(VIOFF(min)) + CMP_5(max) + 50 mV).
2. TRESPss_XX is measured from VIN transition to CMPx output toggle. It takes into account only analog propagation delay.

Table 31-29. DAC Module AC Electrical Specifications

AC CHARACTERISTICS			Standard Operating Conditions: VDDIO = AVDD = VDD 1.62V to 3.63V (unless otherwise stated) **Operating Temperature:** **-40°C ≤ TA ≤ +85°C for Industrial**				
Param. No.	Symbol	Characteristics	Min.	Typ	Max.	Units	Conditions
VSCALE_1	DRES	DAC Resolution	—	—	6	Bits	—
VSCALE_3	VOUT	Output Voltage Range	AVDD/64	—	AVDD	V	—
VSCALE_5	Tset_FS	DAC Full Scale Settling Time	—	—	2.5	µs	+/-4 LSB of final value for step size from 10% to 90%
VSCALE_7	INL	Integral Non Linearity	-1.4	—	1.4	LSB	—
VSCALE_9	DNL	Differential Non Linearity	-0.9	—	0.9	LSB	—
VSCALE_11	GERR	Gain Error	-0.9	—	0.9	LSB	—
VSCALE_13	EOFF	Offset Error	-0.2	—	0.92	LSB	—

31.23. Serial Peripheral Interface (SPI) Mode Electrical Specifications

Figure 31-4. SERCOM SPIx Host Module (CPHA = 0) Timing Diagrams

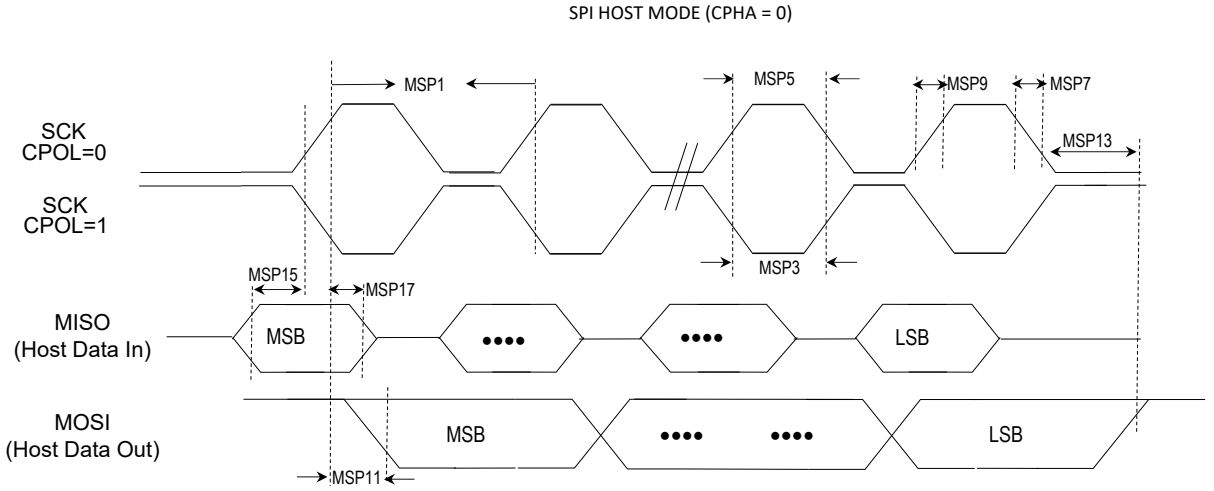

© 2025 Microchip Technology Inc. and its subsidiaries

Figure 31-5. SERCOM SPIx Host Module (CPHA = 1) Timing Diagrams

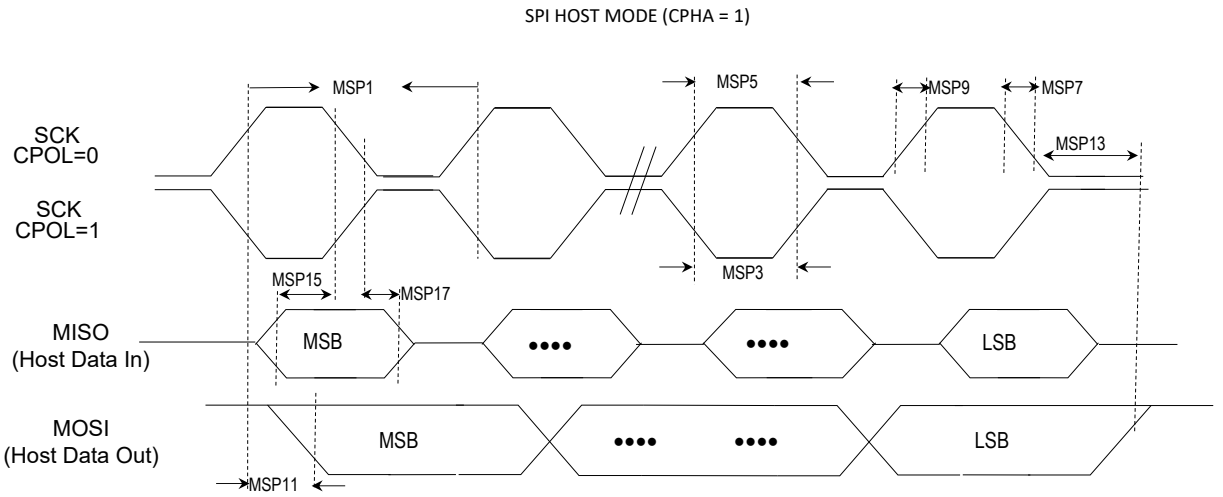

Table 31-30. SERCOM SPIx Module Host Mode Electrical Specifications[1]

AC CHARACTERISTICS			Standard Operating Conditions: VDDIO = AVDD = VDD 1.62V to 3.63V (unless otherwise stated) **Operating Temperature:** **-40°C ≤ TA ≤ +85°C for Industrial**				
Param. No.	Symbol	Characteristics[1]	Min.	Typ.	Max.	Units	Conditions
MSP_1	FSCK	SCK Frequency	—	—	8	MHz	Transmitter mode, CTRLB.RXEN = 0, C_{LOAD} = 30 pF(max).
			—	—	1/(2*(TMIS+NOTE2_TV)[2]		Full Duplex Transmit and Receive mode, C_{LOAD} = 30 pF(max). The max SPI speed of the MCU is partially dependent on the external SPI device performance characteristics. Faster speeds than the loop- back mode above may therefore be possible using the formula.
MSP_3	TSCL	SCK Output Low Time	1/(2*FSCK)	—	—	ns	—
MSP_5	TSCH	SCK Output High Time	1/(2*FSCK)	—	—	ns	—
MSP_7	TSCF	SCK and MOSI Output Fall Time	—	—	DI27	ns	See parameter DI27 in the I/O Specifications
MSP_9	TSCR	SCK and MOSI Output Rise Time	—	—	DI25	ns	See parameter DI25 in the I/O Specifications
MSP_11	TMOV	MOSI Data Output Valid after SCK	—	—	62.5	ns	VDDIO(min), C_{LOAD} = 30 pF(max)
MSP_13	TMOH	MOSI hold after SCK	2.5	—	—	ns	
MSP_15	TMIS	MISO Setup Time of Data Input to SCK	50.7	—	—	ns	
MSP_17	TMIH	MISO Hold Time of Data Input to SCK	0	—	—	ns	
MSP_19	SPI_GCLK	SERCOM SPI input clock frequency, GCLK_SPI	—	—	FCLK_23	MHz	—

© 2025 Microchip Technology Inc. and its subsidiaries

Table 31-30. SERCOM SPIx Module Host Mode Electrical Specifications[1] (continued)

AC CHARACTERISTICS			Standard Operating Conditions: VDDIO = AVDD = VDD 1.62V to 3.63V (unless otherwise stated) **Operating Temperature:** **-40°C ≤ TA ≤ +85°C for Industrial**				
Param. No.	Symbol	Characteristics[1]	Min.	Typ.	Max.	Units	Conditions

Notes:

1. Assumes VDDIO(min) and 30 pF external load on all SPIx pins unless otherwise noted.
2. NOTE2_TV is the Client external device data output valid time from clock edge specification.

Figure 31-6. SERCOM SPIx Client Module (CPHA = 0) Timing Diagrams

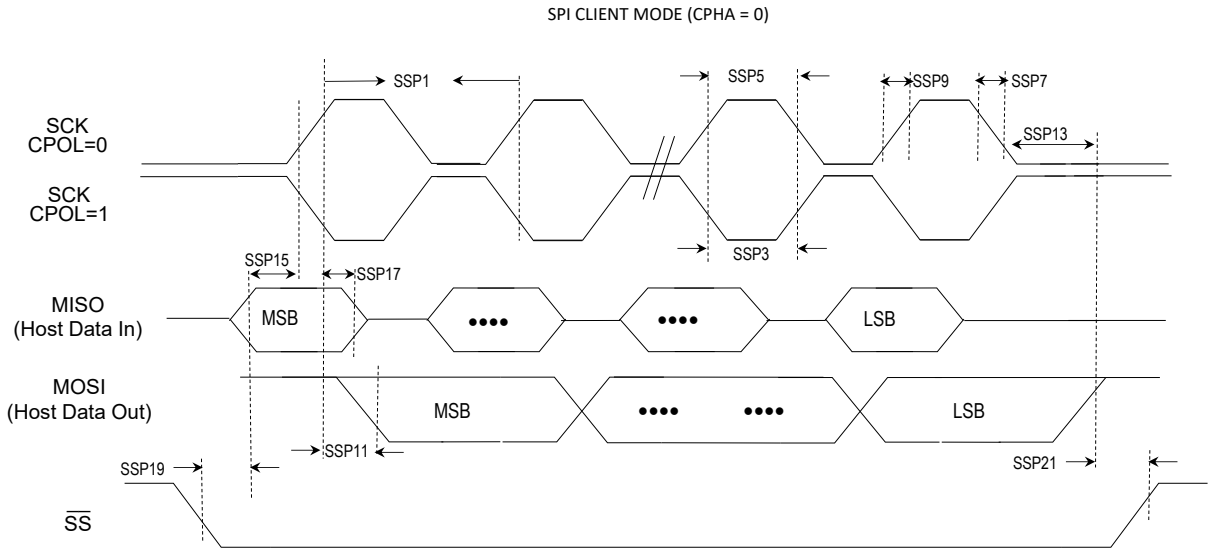

Figure 31-7. SERCOM SPIx Client Module (CPHA = 1) Timing Diagrams

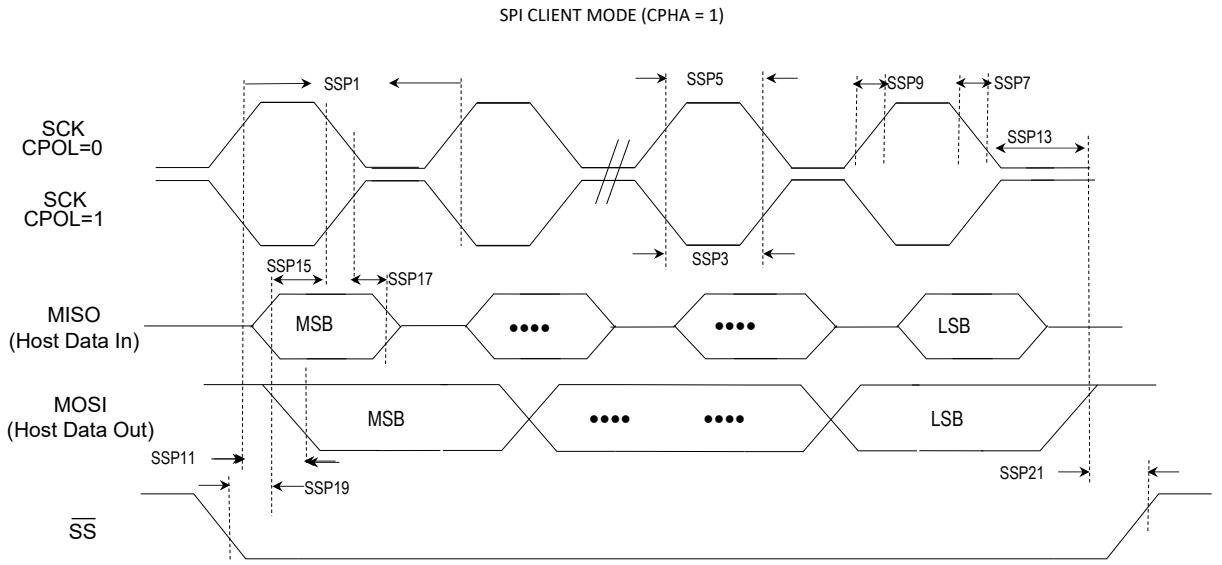

© 2025 Microchip Technology Inc. and its subsidiaries

Table 31-31. SERCOM SPIx Module Client Mode Electrical Specifications[1]

AC CHARACTERISTICS			Standard Operating Conditions: VDDIO = AVDD = VDD 1.62V to 3.63V (unless otherwise stated) **Operating Temperature:** **-40°C ≤ TA ≤ +85°C for Industrial**				
Param. No.	Symbol	Characteristics[1]	Min.	Typical	Max.	Units	Conditions
SSP_1	FSCK	SCK Frequency	—	—	8	MHz	Receiver mode, C_{LOAD} = 30 pF(max).
			—	—	1/(2*(TSOV+NOTE2_TMIS)) [2]		Full Duplex Transmit and Receive mode, C_{LOAD}= 30 pF(max). The maximum SPI speed of the MCU is partially dependent on the external SPI device performance characteristics. Faster speeds than the loop back mode above may therefore be possible using the formula.
SSP_3	TSCL	SCK Output Low Time	1/(2*FSCK)	—	—	ns	—
SSP_5	TSCH	SCK Output High Time	1/(2*FSCK)	—	—	ns	—
SSP_7	TSCF	SCK and MOSI Output Fall Time	—	—	DI27	ns	See parameter DI27 in the I/O Specifications
SSP_9	TSCR	SCK and MOSI Output Rise Time	—	—	DI25	ns	See parameter DI25 in the I/O Specifications
SSP_11	TSOV	MOSI Data Output Valid after SCK	—	—	42.5	ns	VDDIO = 3.3V, C_{LOAD} = 30 pF(max)
SSP_13	TSOH	MOSI hold after SCK	11.9	—	—	ns	
SSP_15	TSIS	MISO Setup Time of Data Input to SCK	(1/(2*FSCK)) - 19	—	—	ns	
SSP_17	TSIH	MISO Hold Time of Data Input to SCK	(1/(2*FSCK)) - 5	—	—	ns	
SSP_19	TSSS	$\overline{SS}$ setup to SCK (PRELOADEN=1)	2*tck_APB	—	—	ns	
		$\overline{SS}$ setup to SCK (PRELOADEN=0)	7	—	—	ns	
SSP_21	TSSH	$\overline{SS}$ hold after SCK Client	(1/(2*FSCK)) - 9	—	—	ns	
SSP_23	SPI_GCLK	SERCOM SPI input clock frequency, GCLK_SPI	—	—	FCLK_23	MHz	—

Notes:

1. Assumes VDDIO(min) and 30 pF external load on all SPIx pins unless otherwise noted.
2. NOTE2_TMIS is the Host external device setup time.

© 2025 Microchip Technology Inc. and its subsidiaries

31.24. SERCOM Synchronous and Asynchronous Receiver and Transmitter (SERCOM USART) Electrical Specifications

Table 31-32. USART AC Electrical Specifications[1]

AC CHARACTERISTICS				Standard Operating Conditions: VDDIO = AVDD = VDD 1.62V to 3.63V (unless otherwise stated) **Operating Temperature:** **-40°C ≤ TA ≤ +85°C for Industrial**				
Param. No.	Symbol	Characteristics		Min.	Typ.	Max.	Units	Conditions
UT_1	FBRATE	Baud Rate	Asynchronous SAMPR = 16x mode	—	—	3	Mbps	VDDIO = 1.62V, CLOAD = 30 pF(max)
UT_3			Asynchronous SAMPR = 8x mode	—	—	6	Mbps	
UT_5			Asynchronous SAMPR = 3x mode	—	—	6	Mbps	
UT_21			Synchronous mode	—	—	1.2	Mbps	VDDIO = 1.62V, CLOAD = 30 pF(max)
UT_23	FUSART	USART maximum GCLK_SERCOM		—	—	FCLK_23	MHz	—
UT_25	FXCK	USART External Clock Input		—	—	FCLK_45	MHz	—

Note:
1. These parameters are characterized but not tested in manufacturing.

31.25. SERCOM Inter-Integrated Circuit (SERCOM I²C) Electrical Specifications

Figure 31-8. SERCOM I²C Start/Stop Bits Host Mode AC Timing Diagrams

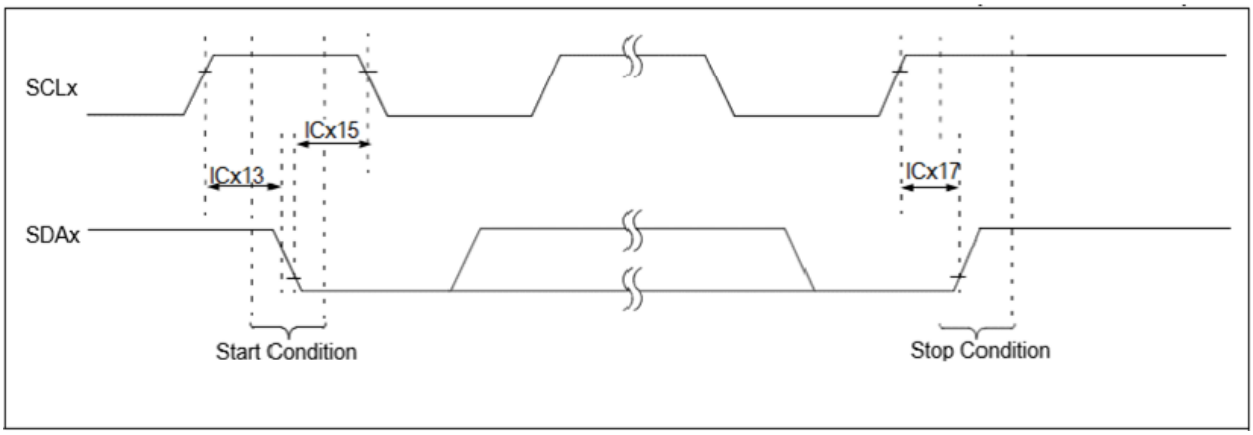

© 2025 Microchip Technology Inc. and its subsidiaries

Figure 31-9. SERCOM I²C Bus Data Host Mode AC Timing Diagrams

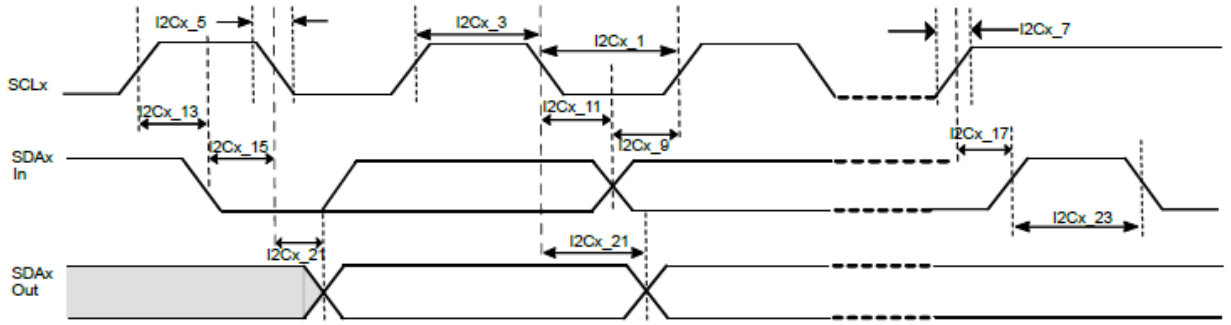

Table 31-33. SERCOM I²C Host Mode AC Electrical Specifications

AC CHARACTERISTICS				Standard Operating Conditions: VDDIO = AVDD = VDD 1.62V to 3.63V (unless otherwise stated) **Operating temperature:** **-40°C ≤ TA ≤ +85°C for Industrial**			
Param. No.	Symbol	Characteristics [1]		Min.	Max.	Units	Conditions
I2CM_1	TL0:SCL	Host Clock Low Time	100 kHz mode	4.7	—	μs	VDDIO = 3.3V, IPULL-UP = 3 mA, CLOAD = 400 pF
			400 kHz mode	1.3	—	μs	
I2CM_3	THI:SCL	Host Clock High Time	100 kHz mode	4	—	μs	VDDIO = 3.3V, IPULL-UP = 3 mA, CLOAD = 400 pF
			400 kHz mode	0.6	—	μs	
I2CM_5	TF:SCL	SDAx and SCLx Fall Time	100 kHz mode	—	300	ns	VDDIO = 3.3V, IPULL-UP = 3 mA, CLOAD = 400 pF
			400 kHz mode	—	300	ns	
I2CM_7	TR:SCL	SDAx and SCLx Rise Time	100 kHz mode	—	1000	ns	VDDIO = 3.3V, IPULL-UP = 3 mA, CLOAD = 400 pF
			400 kHz mode	—	300	ns	
I2CM_9	TSU:DAT	Data Setup Time	100 kHz mode	250	—	ns	VDDIO = 3.3V, IPULL-UP = 3 mA, CLOAD = 400 pF
			400 kHz mode	100	—	ns	
I2CM_11	THD:DAT	Data Hold Time[1]	100 kHz mode	300	—	ns	VDDIO = 3.3V, IPULL-UP = 3 mA, CLOAD = 400 pF
			400 kHz mode	300	—	ns	
I2CM_13	TSU:STA	Start Condition Setup Time	100 kHz mode	4.7	—	μs	VDDIO = 3.3V, IPULL-UP = 3 mA, CLOAD = 400 pF
			400 kHz mode	0.6	—	μs	
I2CM_15	THD:STA	Start Condition Hold Time	100 kHz mode	4	—	μs	VDDIO = 3.3V, IPULL-UP = 3 mA, CLOAD = 400 pF
			400 kHz mode	0.6	—	μs	

© 2025 Microchip Technology Inc. and its subsidiaries

Table 31-33. SERCOM I²C Host Mode AC Electrical Specifications (continued)

AC CHARACTERISTICS				Standard Operating Conditions: VDDIO = AVDD = VDD 1.62V to 3.63V (unless otherwise stated) **Operating temperature:** **-40°C ≤ TA ≤ +85°C for Industrial**			
Param. No.	**Symbol**	**Characteristics** [1]		**Min.**	**Max.**	**Units**	**Conditions**
I2CM_17	TSU:ST0	Stop Condition Setup Time	100 kHz mode	4	—	µs	VDDIO = 3.3V, IPULL-UP = 3 mA, CLOAD = 400 pF
			400 kHz mode	0.6	—	µs	
I2CM_21	TAA:SCL	Output Valid from Clock	100 kHz mode	—	3.45	µs	VDDIO = 3.3V, IPULL-UP = 3 mA, CLOAD = 400 pF
			400 kHz mode	—	0.9	µs	
I2CM_23	TBF:SDA	Bus Free Time[2]	100 kHz mode	4.7	—	µs	VDDIO = 3.3V, IPULL-UP = 3 mA, CLOAD = 400 pF
			400 kHz mode	1.3	—	µs	

Notes:

1. Longest delay between data hold timing based on the SDAHOLD bitfield of the CTRLA register from the SERCOM module and timing based on 4 period of GCLK_SERCOM for 100 kHz/400 kHz mode.
2. The amount of time the bus must be free before a new transmission can start (STOP condition to START condition).

Figure 31-10. SERCOM I²C Start/Stop Bits Client Mode AC Timing Diagrams

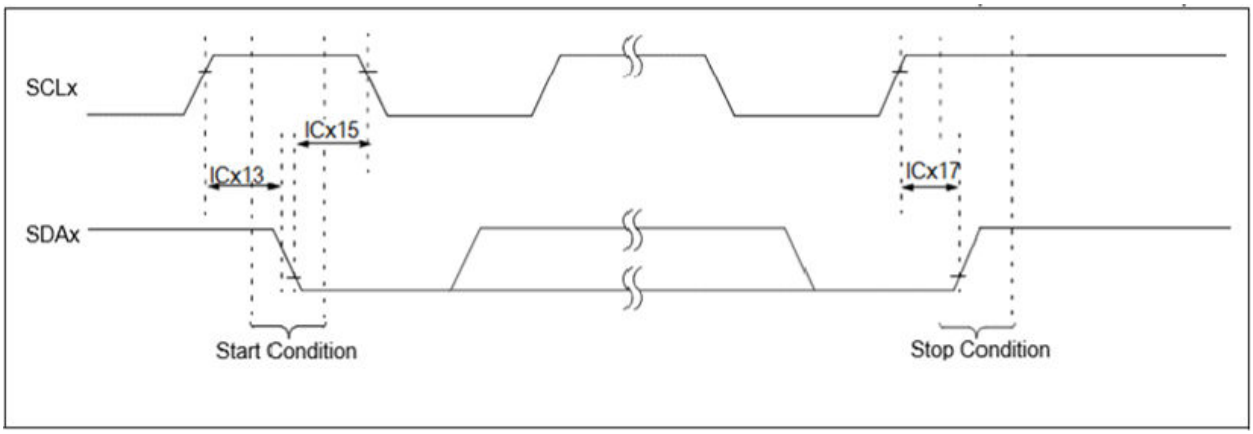

Figure 31-11. SERCOM I²C Bus Data Client Mode AC Timing Diagrams

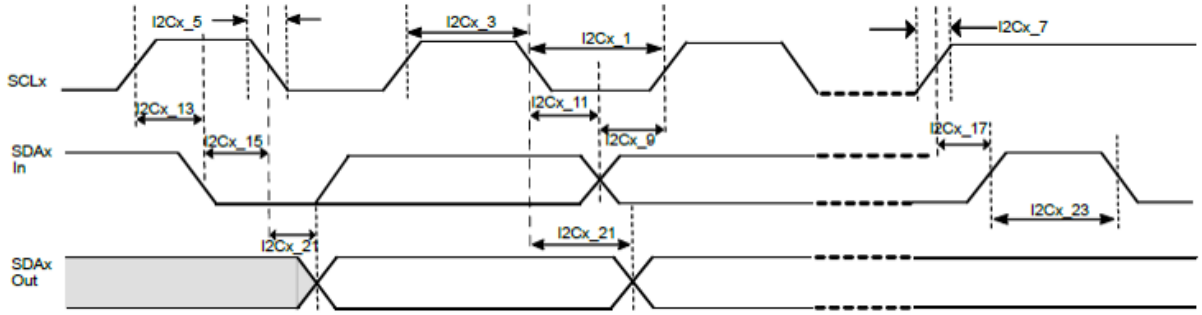

© 2025 Microchip Technology Inc. and its subsidiaries

Table 31-34. SERCOM I²C Client Mode AC Electrical Specifications

AC CHARACTERISTICS				Standard Operating Conditions: VDDIO = AVDD = VDD 1.62V to 3.63V (unless otherwise stated) **Operating temperature :** **-40°C ≤ TA ≤ +85°C for Industrial**			
Param. No.	**Symbol**	**Characteristics** [1]		**Min.**	**Max.**	**Units**	**Conditions**
I2CS_1	TL0:SCL	Client Clock Low Time	100 kHz mode	4.7	—	µs	VDDIO = 3.3V, IPULL-UP = 3 mA, CLOAD = 400 pF
			400 kHz mode	1.3	—	µs	
I2CS_3	THI:SCL	Client Clock High Time	100 kHz mode	4	—	µs	VDDIO=3.3v, IPULL-UP = 3 mA, CLOAD = 400 pF
			400 kHz mode	0.6	—	µs	
I2CS_5	TF:SCL	SDAx and SCLx Fall Time	100 kHz mode	—	300	ns	VDDIO = 3.3V, IPULL-UP = 3 mA, CLOAD = 400 pF
			400 kHz mode	—	300	ns	
I2CS_7	TR:SCL	SDAx and SCLx Rise Time	100 kHz mode	—	1000	ns	VDDIO = 3.3V, IPULL-UP = 3 mA, CLOAD = 400 pF
			400 kHz mode	—	300	ns	
I2CS_9	TSU:DAT	Data Setup Time	100 kHz mode	250	—	ns	VDDIO = 3.3V, IPULL-UP = 3 mA, CLOAD = 400 pF
			400 kHz mode	100	—	ns	
I2CS_11	THD:DAT	Data Hold Time[1]	100 kHz mode	300	—	ns	VDDIO = 3.3V, IPULL-UP = 3 mA, CLOAD = 400 pF
			400 kHz mode	300	—	ns	
I2CS_13	TSU:STA	Start Condition Setup Time	100 kHz mode	4.7	—	µs	VDDIO = 3.3V, IPULL-UP = 3 mA, CLOAD = 400 pF
			400 kHz mode	0.6	—	µs	
I2CS_15	THD:STA	Start Condition Hold Time	100 kHz mode	4	—	µs	VDDIO = 3.3V, IPULL-UP = 3 mA, CLOAD = 400 pF
			400 kHz mode	0.6	—	µs	
I2CS_17	TSU:ST0	Stop Condition Setup Time	100 kHz mode	4	—	µs	VDDIO = 3.3V, IPULL-UP = 3 mA, CLOAD = 400 pF
			400 kHz mode	0.6	—	µs	
I2CS_21	TAA:SCL	Output Valid from Clock	100 kHz mode	—	3.45	µs	VDDIO = 3.3V, IPULL-UP = 3 mA, CLOAD = 400 pF
			400 kHz mode	—	0.9	µs	
I2CS_23	TBF:SDA	Bus Free Time[2]	100 kHz mode	4.7	—	µs	VDDIO = 3.3V, IPULL-UP = 3 mA, CLOAD = 400 pF
			400 kHz mode	1.3	—	µs	

Notes:

1. Longest delay between data hold timing based on the SDAHOLD bit field of the CTRLA register from the SERCOM module and timing based on 4 period of GCLK_SERCOM for 100 kHz/400 kHz mode.
2. The amount of time the bus must be free before a new transmission can start (STOP condition to START condition).

© 2025 Microchip Technology Inc. and its subsidiaries

31.26. Timer Counter (TC) Electrical Specifications

Figure 31-12. TCx Timer Capture Input AC Timing Diagrams

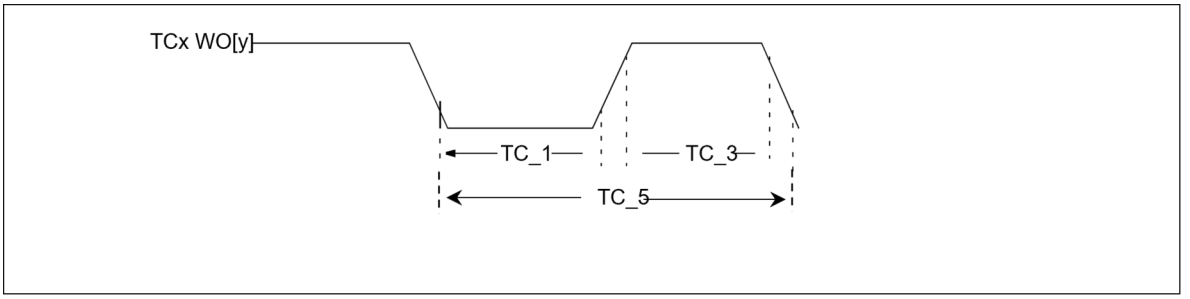

Figure 31-13. TCx Timer Compare Output AC Timing Diagrams

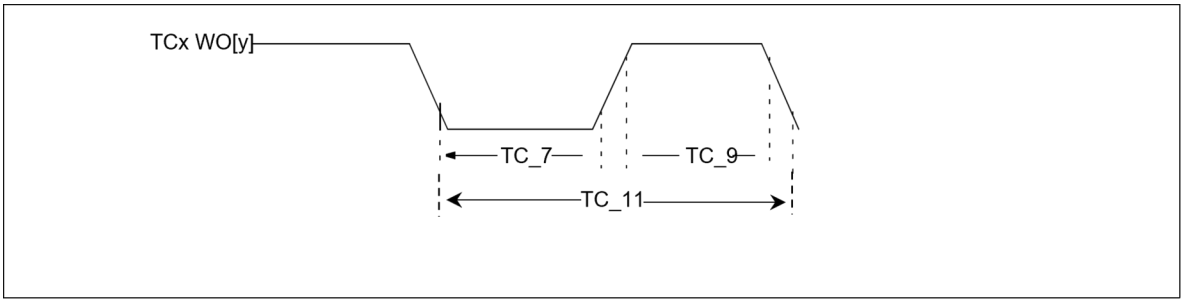

Table 31-35. TCx Timer Capture AC Electrical Specifications

AC CHARACTERISTICS			Standard Operating Conditions: VDDIO = AVDD = VDD 1.62V to 3.63V (unless otherwise stated) **Operating Temperature:** **-40°C ≤ TA ≤ +85°C for Industrial**				
Param. No.	Symbol	Characteristics	Min.	Typ.	Max.	Units	Conditions
TC_1	TCINLOW	Capture TCx Input Low Time	2/fGLK_TCx	—	—	ns	VDDIO = 1.62V and meet TC_5 specification
TC_3	TCINHIGH	Capture TCx Input High Time	2/fGLK_TCx	—	—	ns	VDDIO = 1.62V and meet TC_5 specification
TC_5	TCINPERIOD	Capture Input Period	4/fGLK_TCx	—	—	ns	VDDIO = 1.62V
TC_7	TCOUTLOW	Compare TCx Output Low Time	3*DI_27	—	—	ns	VDDIO = 1.62V and meet TC_11 specification
TC_9	TCOUTHIGH	Compare TCx Output High Time	3*DI_25	—	—	ns	VDDIO = 1.62V and meet TC_11 specification
TC_11	TCOUTPERIOD	Compare Output Period	TC_7+TC_9	—	—	ns	VDDIO = 1.62V
TC_13	fGCLK_TCx	TC peripheral module clock frequency	—	—	FCLK_37	MHz	VDDIO (min)

© 2025 Microchip Technology Inc. and its subsidiaries

31.27. Temperature Sensor (TSENS)

Table 31-36. Temperature Sensor AC Electrical Specifications

AC CHARACTERISTICS			Standard Operating Conditions: VDDIO = AVDD = VDD 1.62V to 3.63V (unless otherwise stated) **Operating temperature:** **-40°C ≤ TA ≤ +85°C for Industrial**				
Param. No.	**Symbol**	**Characteristics**	**Min.**	**Typ**	**Max.**	**Units**	**Conditions**
TS_3	TS_Abs_Acc	Temperature sensor absolute accuracy	-10	—	10	°C	Using method described in the Temperature Sensor chapter
TS_5	TS_Slope	Temperature sensor slope over temperature	2.3	2.4	2.5	mV/°C	—
TS_6	TS_SlopeVariation	Temperature sensor slope variation over Voltage	-1.7	1	3.7	mV/°C	AVDD = 1.62V to 3.6V
TS_7	TS_Vout	Temperature sensor Output Voltage	—	0.667	—	V	T = 25°C, AVDD = 3.3V

31.28. NVM Block (Flash, Data Flash, NVM Configuration Rows) Electrical Specifications

Table 31-37. Flash NVM AC Electrical Specifications

AC CHARACTERISTICS				Standard Operating Conditions: VDDIO = AVDD = VDD 1.62V to 3.63V (unless otherwise stated) **Operating temperature:** **-40°C ≤ TA ≤ +85°C for Industrial**				
Param. No.	**Symbol**	**Characteristics**		**Min.**	**Typ.**	**Max.**	**Units**	**Conditions**
NVM_1	FRETEN	Flash Data Retention		20	—	—	Yrs	Under all conditions less than Absolute Maximum Ratings specifications
NVM_3	EP	Cell Endurance (Flash Erase and Write Operation)		25000	—	—	Cycles	
NVM_5	FREAD	Flash Read	0 Wait States	—	—	14	MHz	VDD = 1.62V to 2.7V
			1 Wait States	—	—	28		
			2 Wait States	—	—	42		
			3 Wait States	—	—	48		
			0 Wait States	—	—	24	MHz	VDD = 2.7V to 3.63V
			1 Wait States	—	—	48		
NVM_7	TFPW	Program Cycle Time	Write Page (2)	—	—	2.5	ms	VDD = 3.3V
NVM_9	TCE		Erase Chip	—	—	240	ms	
NVM_11	TFER		Erase Row	—	—	6	ms	

Notes:

1. Maximum Flash operating frequencies are given in the table above, but are limited by the Embedded Flash access time when the processor is fetching code out of it. Theses tables provide the device maximum operating frequency defined by the field RWS of the NVMCTRL CTRLA register. This field defines the number of Wait states required to access the Embedded Flash Memory.
2. For this Flash technology, a maximum number of 8 consecutive writes is allowed per row. Once this number is reached, a row erase is mandatory.

© 2025 Microchip Technology Inc. and its subsidiaries

31.29. SWD 2-Wire Electrical Specifications

Figure 31-14. SWD 2-Wire Read/Write AC Timing Diagrams

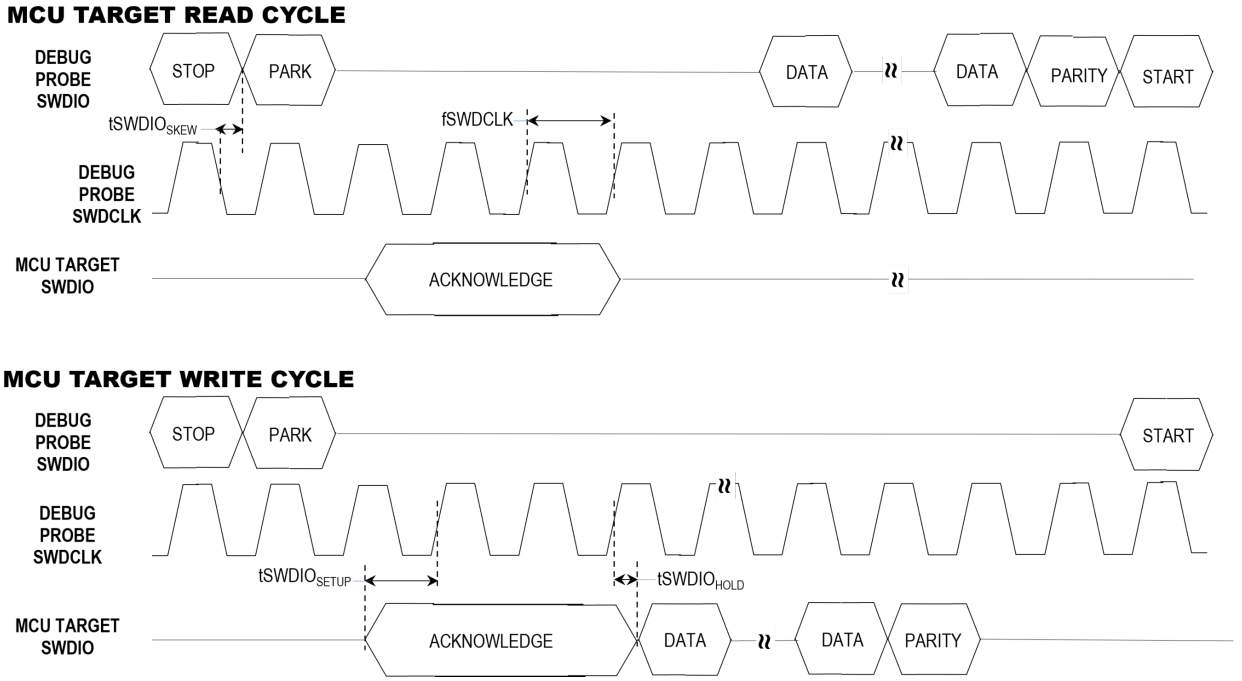

Table 31-38. SWD 2-Wire AC Electrical Specifications

AC CHARACTERISTICS			Standard Operating Conditions: VDDIO = AVDD = VDD 1.62V to 3.63V (unless otherwise stated) **Operating temperature:** **-40°C ≤ TA ≤ +85°C for Industrial**				
Param. No.	Symbol	Characteristics	Min.	Typ.	Max.	Units	Conditions
SWD_1	fSWDCLK	SWDCLK Clock Frequency	—	—	20	MHz	VDDIO(min) - VDDIO(max)
SWD_3	tSWDCLKHIGH	SWDCLK Clock High Time	1 / (2 * fSWDCLK)	—	—	ns	
SWD_5	tSWDCLKLOW	SWDCLK Clock Low Time	1 / (2 * fSWDCLK)	—	—	ns	
SWD_7	tSWDIOSKEW	SWDIO Skew	-5	—	5	ns	
SWD_9	tSWDIOSETUP	SWDIO Setup Time	4	—	—	ns	
SWD_11	tSWDIOHOLD	SWDIO Hold Time	1	—	—	ns	

© 2025 Microchip Technology Inc. and its subsidiaries

32. Electrical Specifications 125°C

32.1. Absolute Maximum Ratings

Absolute maximum ratings for are listed below. Exposure to these maximum rating conditions for extended periods may affect device reliability. Functional operation of the device at these or any other conditions, above the parameters indicated in the operation listings of this specification, is not implied.

Table 32-1. MCU Absolute Maximum Electrical Characteristics

Ambient temperature under bias	-40°C to +125°C
Storage temperature	-60°C to +150°C
Voltage on VDDIO with respect to GND	-0.3V to +3.8V
Voltage on any pins, with respect to GND(3)	-0.3V to (VDDIO+0.3V)
Voltage on VREFA/B with respect to AVDD	-0.3V to (AVDD+0.3V)
Maximum current out of GND pins	130 mA
Maximum current into VDDIO pins(2)	92 mA
Maximum output current sourced/sunk by any Low-Current Mode I/O pin	10 mA
Maximum output current sourced/sunk by any High-Current Mode I/O pin	20 mA
Maximum current sunk by all ports	129 mA
Maximum current sourced by all ports(2)	129 mA
Maximum Junction Temperature	+145°C
ESD qualification:	
Human Body Model (HBM) per JESD22-A114	2000V
Charged Device Model (CDM) (ANSI/ESD STM 5.3.1)...(All pins/Corner pins)	500V/750V

Notes:

1. Stresses above those listed under *Absolute Maximum Ratings* may cause permanent damage to the device. This is a stress rating only and functional operation of the device at those or any other conditions, above those indicated in the operation listings of this specification, is not implied. Exposure to maximum rating conditions for extended periods may affect device reliability.
2. Maximum allowable current is a function of device maximum power dissipation.
3. When applying higher or lower voltage than those specified on the I/O pins, refer to DI_19/DI_21 to respect the maximum injection current specification.

32.2. General Operating Ratings and Thermal Conditions

Table 32-2. Operating Frequency vs. Voltage

Param. No.	VDDIO, VDDIN, AVDD Range	Temp. Range (in °C)	Max MCU Frequency	Comments
DC_7	2.7 to 3.63V(1)	-40°C to +125°C	32 MHz	Extended

Note:

1. With BOD33 disabled. If the BOD33 is enabled, refer to the REG_47 parameter.

Table 32-3. MCU Thermal Operating Conditions

Rating	Symbol	Min.	Typ.	Max.	Unit
Extended Temperature Range Operating Ambient Temperature Range Operating Junction Temperature Range	TA TJ	-40 —	—	125 145	°C °C

© 2025 Microchip Technology Inc. and its subsidiaries

Table 32-3. MCU Thermal Operating Conditions (continued)

Rating	Symbol	Min.	Typ.	Max.	Unit
Power Dissipation: • **Internal Chip Power Dissipation:** PINT = (VDDIO x (IDD –∑ IOHVDDIO)) + (VDDCORE x IDDCORE) + + (AVDD x (IDDANA - ∑ IOHAVDD)) + (VDDREG x IDDREG) • **I/O Pin Power Dissipation:** PI/O = ∑ ((VDDIO – VOHVDDIO) x IOHVDDIO) + ∑ (VOL x IOLVDDIO) + ∑ ((AVDD – VOHAVDD) x IOHAVDD) + ∑ (VOL x IOLAVDD)	PD		PINT + PI/O		W
Maximum Allowed Power Dissipation	PDMAX		(TJ – TA)/θJA		W

Table 32-4. Thermal Packaging Characteristics[1]

Characteristics	Symbol	Typ.	Max.	Unit
Thermal Resistance, 32-pin TQFP (7x7x1 mm) Package	θJA	63.1	—	°C/W
Thermal Resistance, 48-pin TQFP (7x7x1 mm) Package	θJA	62.7	—	°C/W
Thermal Resistance, 64-pin TQFP (10x10x1 mm) Package	θJA	56.3	—	°C/W
Thermal Resistance, 32-pin VQFN (5x5x1 mm) Package	θJA	40.9	—	°C/W
Thermal Resistance, 48-pin VQFN (7x7x0.9 mm) Package	θJA	30.9	—	°C/W
Thermal Resistance, 64-pin VQFN (9x9x1 mm) Package	θJA	31.4	—	°C/W

Note:
1. Junction to ambient thermal resistance, Theta-JA (θJA) numbers are achieved by package simulations.

32.3. Active Power Specifications

Table 32-5. MCU Active Current Consumption DC Electrical Specifications

DC CHARACTERISTICS				Standard Operating Conditions: VDDIO = AVDD = VDD 2.7V to 3.63V (unless otherwise stated) **Operating Temperature:** **-40°C ≤ TA ≤ +125°C for Extended Temp**			
Param. No.	Symbol	Characteristics	Clock/Freq	Typ.	Max.	Units	Conditions
APWR_1	IDD_ACTIVE[1,2]	MCU IDD in Active mode	DFLL 48 MHz	3.9	4.81	mA	AVDD = VDDIO = 3.3V XOSC32K at 32.768 kHz as reference of DFLL48M

Notes:
1. Conditions:
   - No peripheral modules are operating (i.e., all peripherals inactive)
   - MCU is running on Flash with 1 wait states unless otherwise specified
   - NVMCTRL cache enabled
   - BOD33 disabled
   - I/Os are inactive input mode with input trigger disabled
   - All clock generation sources disabled unless otherwise specified
   - GCLK clock generators 1 to 8 stopped (GENCTRL[8:1].GENEN = 0)
   - CPU, AHB clocks undivided – APBA clock divided by 4 – APBB and APBC bridges off
   - The following AHB module clocks are running: NVMCTRL, APBA bridge. All other AHB clocks are stopped.
   - The following peripheral clocks running: PM, SYSCTRL, RTC. All other peripheral clocks are stopped.
   - RESET# = VDDIO
   - Power consumption varies over temperature. Worst case is given by maximum.
2. MCU Running on CoreMark® Test Suite.

© 2025 Microchip Technology Inc. and its subsidiaries

32.4. Idle Power Specifications

Table 32-6. MCU Idle Current Consumption DC Electrical Specifications

DC CHARACTERISTICS				Standard Operating Conditions: VDDIO = AVDD = VDD 2.7V to 3.63V (unless otherwise stated) **Operating Temperature:** **-40°C ≤ TA ≤ +125°C for Extended Temp**			
Param. No.	Symbol	Characteristics	Clock/Freq	Typ.	Max.	Units	Conditions
IPWR_1	IDD_IDLE[1]	MCU IDD in IDLE0 mode	DFLL 48 MHz	1.28	2.05	mA	AVDD = VDDIO = 3.3V XOSC32K at 32.768 kHz as reference of DFLL48M
IPWR_13		MCU IDD in IDLE2 mode	DFLL 48 MHz	0.76	1.50	mA	AVDD = VDDIO = 3.3V XOSC32K at 32.768 kHz as reference of DFLL48M

Note:

1. Conditions:
   - No peripheral modules are operating (i.e., all peripherals inactive)
   - MCLK all APB clock masked except MCLK and NVMCTRL
   - MCLK.AHBMASK = 0x00C00FFF
   - CMCC enable
   - MCU is running on Flash with automatic 1 wait states unless otherwise specified
   - Low-power cache enabled
   - BOD33 is disabled
   - NVMCTRL cache enabled
   - I/Os are inactive input mode with input trigger disabled
   - All clock generation sources disabled unless otherwise specified
   - GCLK clock generators 1 to 8 stopped (GENCTRL[8:1].GENEN = 0)
   - CPU, AHB clocks undivided. APBA clock divided by 4, APBB and APBC bridges off
   - The following AHB module clocks are running: NVMCTRL, APBA bridge. All other AHB clocks are stopped.
   - The following peripheral clocks running: PM, SYSCTRL, RTC. All other peripheral clocks are stopped.
   - RESET# = VDDIO
   - Power consumption varies over temperature. Worst case is given by maximum.

32.5. Standby Power Specifications

Table 32-7. MCU Standby Current Consumption DC Electrical Specifications

DC CHARACTERISTICS				Standard Operating Conditions: VDDIO = AVDD = VDD 2.7V to 3.63V (unless otherwise stated) **Operating Temperature:** **-40°C ≤ TA ≤ +125°C for Extended Temp**			
Param. No.	Symbol	Characteristics	VDDIO	Typ.	Max.	Units	Conditions
SPWR_1	IDD_STANDBY[1]	MCU IDD in Standby mode XOSC32K running RTC running at 1 kHz	3.3V	2.47	442	µA	XOSC32K running RTC running at 1 kHz[1] SYSCTRL -> VREG.bit.RUNSTDBY = 0.
SPWR_29		MCU IDD in Standby mode XOSC32K stopped RTC stopped	3.3V	1.35	438	µA	XOSC32K stopped RTC stopped SYSCTRL->VREG.bit.RUNSTDBY = 0.

© 2025 Microchip Technology Inc. and its subsidiaries

Table 32-7. MCU Standby Current Consumption DC Electrical Specifications (continued)

DC CHARACTERISTICS				Standard Operating Conditions: VDDIO = AVDD = VDD 2.7V to 3.63V (unless otherwise stated) **Operating Temperature:** **-40°C ≤ TA ≤ +125°C for Extended Temp**			
Param. No.	Symbol	Characteristics	VDDIO	Typ.	Max.	Units	Conditions

Note:

1. Conditions:
   - System in Standby mode
   - No SleepWalking (except RTC when indicated)
   - Peripheral modules are inactive (except RTC when indicated)
   - All clocks stopped (CPU, AHB, APB, Main, GCLK, except RTC running at 1 KHz from XOSC32K when indicated)
   - All clock generation sources disabled except XOSC32K running with external 32 kHz crystal when indicated
   - I/Os are inactive input mode with input trigger disabled
   - WDT
   - BOD33 disabled
   - RESET# = VDDIO

32.6. Wake-Up Power Specifications

Table 32-8. Wake-Up Timings from Low-Power Modes AC Electrical Specifications[(1)]

AC CHARACTERISTICS			Standard Operating Conditions: VDDIO = AVDD = VDD 2.7V to 3.63V (unless otherwise stated) **Operating Temperature:** **-40°C ≤ TA ≤ +125°C for Extended Temp**				
Param. No.	Symbol	Characteristics	Min.	Typ.	Max.	Units	Conditions
WKUP_2	WKUP_IDLE2[(1)]	Wake from IDLE2 mode	—	15.8	—	µs	—
WKUP_3	WKUP_STDBY	Wake from Standby mode	—	20.6	—	µs	—

Note:

1. Conditions:
   - VDD = VDDIO = 3.3V
   - CPU clock = 8 MHz from OSC8M
   - 0 wait states
   - Cache disabled
   - Flash in WAKEUPINSTANT mode (NVMCTRL.CTRLB.SLEEPRM = 1)

32.7. I/O Pin Electrical Specifications

Table 32-9. I/O Pin AC/DC Electrical Specifications [(1)]

AC/DC CHARACTERISTICS			Standard Operating Conditions: VDDIO = AVDD = VDD 2.7V to 3.63V (unless otherwise stated) **Operating Temperature:** **-40°C ≤ TA ≤ +125°C for Extended Temp**				
Param. No.	Symbol	Characteristics	Min.	Typ.	Max.	Units	Conditions
DI_1	VIL	Input Low- Voltage I/O Pins	GND	—	0.3*VDD	V	2.7V ≤ VDD ≤ 3.63V
DI_3	VIH	Input High Voltage	0.55*VDD	—	VDD	V	2.7V ≤ VDD ≤ 3.63V

© 2025 Microchip Technology Inc. and its subsidiaries

Table 32-9. I/O Pin AC/DC Electrical Specifications [1] (continued)

AC/DC CHARACTERISTICS			Standard Operating Conditions: VDDIO = AVDD = VDD 2.7V to 3.63V (unless otherwise stated) **Operating Temperature:** **-40°C ≤ TA ≤ +125°C for Extended Temp**				
Param. No.	Symbol	Characteristics	Min.	Typ.	Max.	Units	Conditions
DI_5	VOL	Output voltage low (Standard pins and I²C pins in GPIO mode, Low Drv Strength, DRVSTR = 0)	—	—	0.2*VDD	V	IOL (2.7V ≤ VDD <3V) = 1 mA IOL (3V ≤ VDD ≤ 3.63V) = 2.5 mA
DI_7		Output voltage low (Standard pins and I²C pins in GPIO mode, High Drv Strength, DRVSTR = 1)					IOL (2.7V ≤ VDD <3V) = 3 mA IOL (3V ≤ VDD ≤ 3.63V) =10 mA
DI_9	VOH	Output voltage High (Standard pins and I²C pins in GPIO mode, Low Drv Strength, DRVSTR = 0)	0.8*VDD	—	—	V	IOH (2.7V ≤ VDD <3V) = 0.7 mA IOH (3V ≤ VDD ≤ 3.63V) = 2 mA
DI_11		Output voltage High (Standard pins and I²C pins in GPIO mode, High Drv Strength, DRVSTR = 1)					IOH (2.7V ≤ VDD <3V) = 2 mA IOH (3V ≤ VDD ≤ 3.63V) = 7 mA
DI_15	RPDWN	Internal Pull-Down (DIR = OUT = 0, PULLEN = 1)	20	—	60	kΩ	2.7V ≤ VDD ≤ 3.63V
DI_17	RPUP	Internal Pull-Up (DIR = 0, OUT = PULLEN = 1)	20	—	60	kΩ	

Note:

1. The RESET pin has the same properties as standard GPIOs.

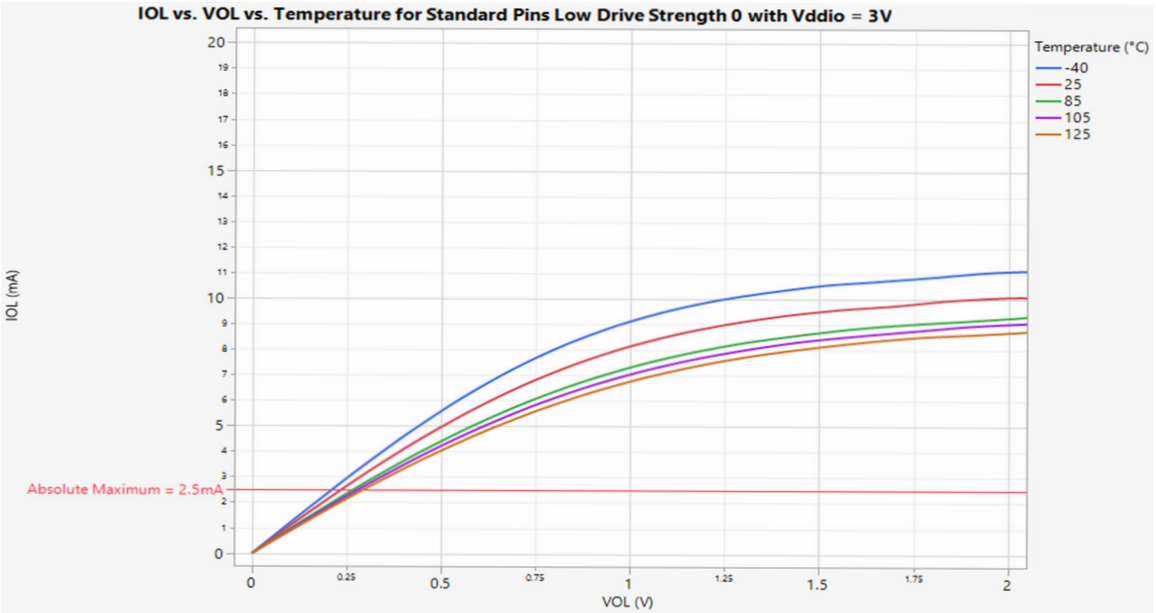

© 2025 Microchip Technology Inc. and its subsidiaries

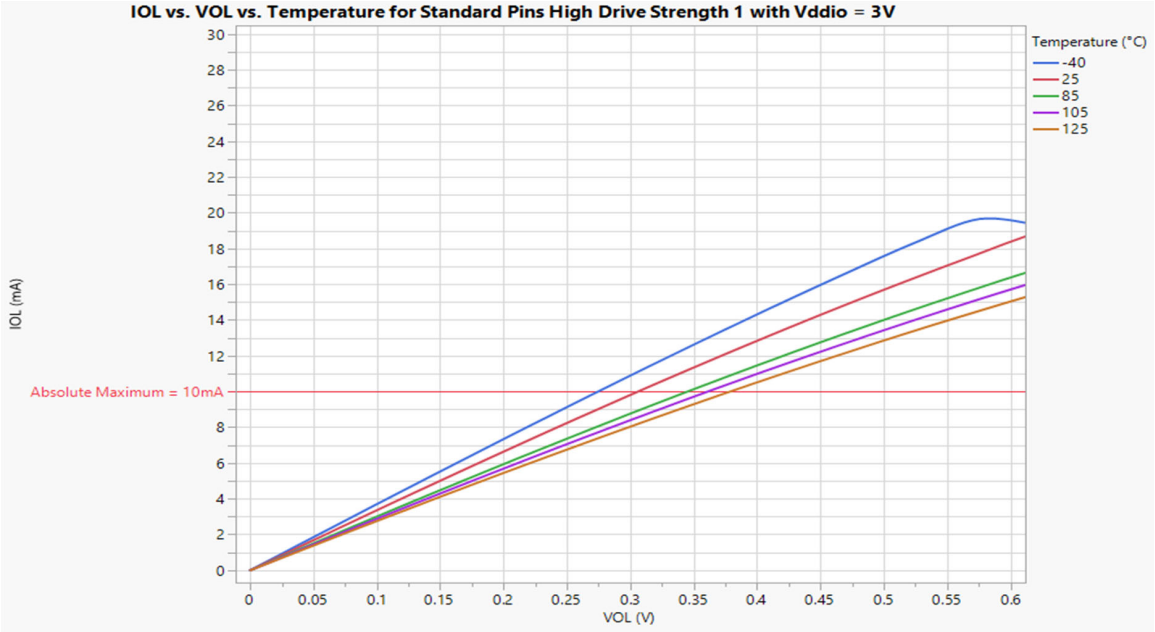

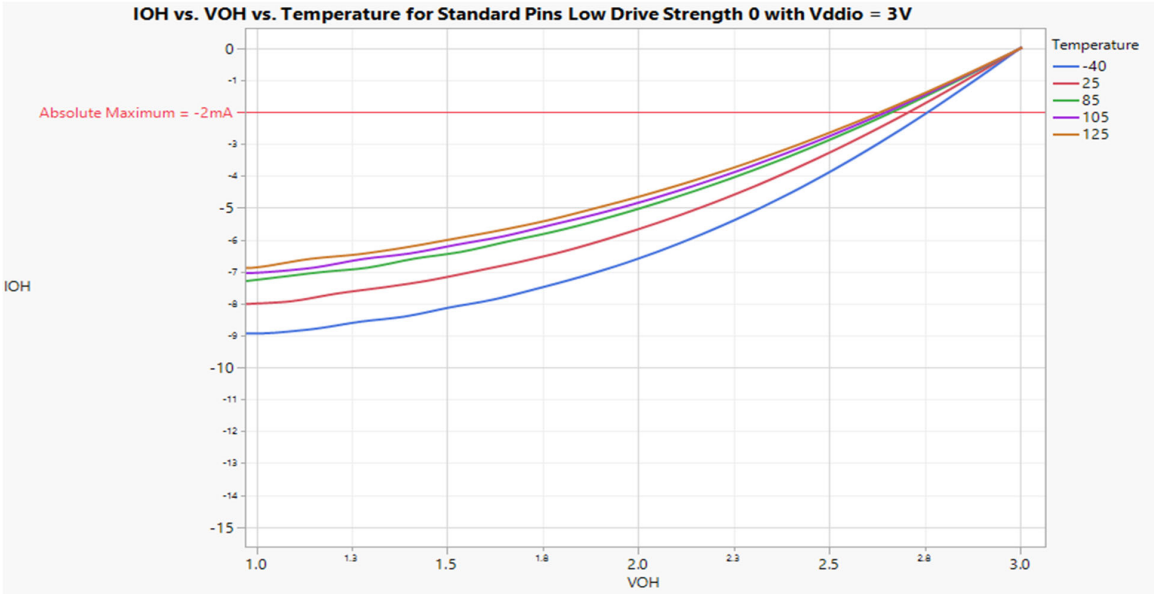

© 2025 Microchip Technology Inc. and its subsidiaries

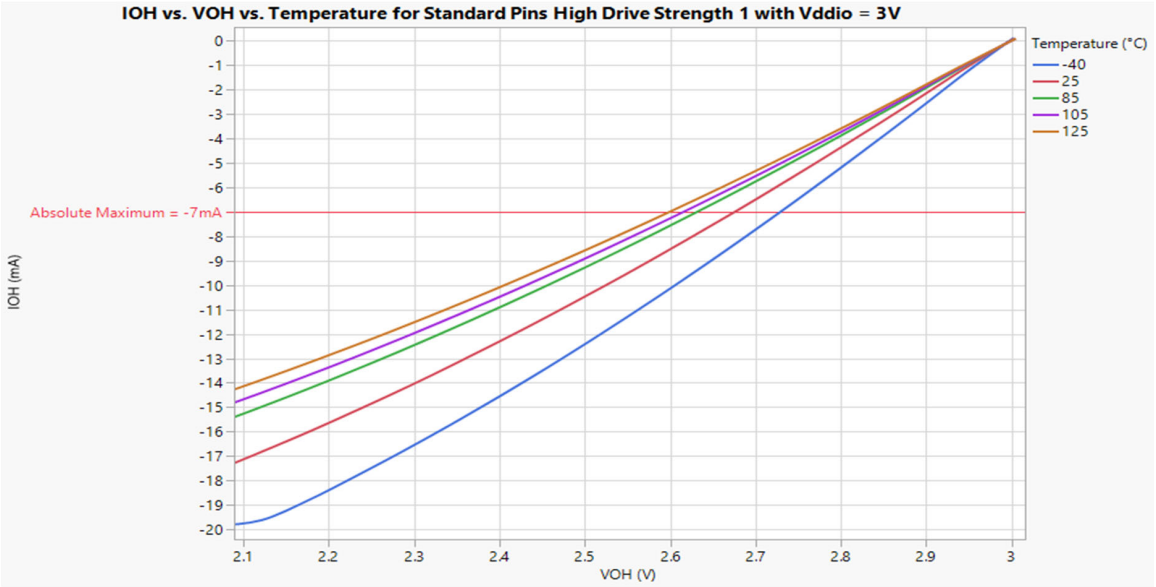

32.8. Internal Voltage Reference Specifications

Table 32-10. Internal Voltage Reference DC Electrical Specifications

DC CHARACTERISTICS			Standard Operating Conditions: VDDIO = AVDD = VDD 2.7V to 3.63V (unless otherwise stated) **Operating temperature:** **-40°C ≤ TA ≤ +125°C for Extended Temp**				
Param. No.	Symbol	Characteristics	Min.	Typ.	Max.	Units	Conditions
VR_1	IREF(1)	Internal Voltage Reference ADC.REFCTRL.REFSEL = INT1V	0.96	1	1.02	V	Over full operating temperature range
VR_3		DAC.CTRLB.REFSEL = INT1V	0.97	1	1.01	V	25 °C
VR_9a	ACIREF(2)	Internal Voltage Reference Comparator AC.COMPCTRLn.MUXNEG = band gap	1.06	1.1	1.12	V	Over full operating temperature range
VR_9b		Internal Voltage Reference Comparator AC.COMPCTRLn.MUXNEG = band gap	1.07	1.1	1.12	V	25 °C

Notes:

1. ADC and DAC reference voltages < 2.4V (i.e., < 500 µV/step) is not practical and peripheral performance is not guaranteed.
2. See parameter CMP_23 for Comparator Reference voltage range information.

32.9. Maximum Clock Frequencies Electrical Specifications

Table 32-11. Maximum Clock Frequencies AC Electrical Specifications

AC CHARACTERISTICS		Standard Operating Conditions: VDDIO = AVDD = VDD 2.7V to 3.63V (unless otherwise stated) **Operating temperature:** **-40°C ≤ TA ≤ +125°C for Extended Temp**		
Param. No.	Symbol	Characteristics	Max.	Units
FCLK_1	fCPU	CPU clock frequency	32	MHz
FCLK_3	fAHB	AHB clock frequency	32	MHz

© 2025 Microchip Technology Inc. and its subsidiaries

Table 32-11. Maximum Clock Frequencies AC Electrical Specifications (continued)

AC CHARACTERISTICS		Standard Operating Conditions: VDDIO = AVDD = VDD 2.7V to 3.63V (unless otherwise stated) **Operating temperature:** **-40°C ≤ TA ≤ +125°C for Extended Temp**		
Param. No.	**Symbol**	**Characteristics**	**Max.**	**Units**
FCLK_5	fAPBn	APBA, APBB, APBC clock frequency	32	MHz
FCLK_6	fGCLKGEN[0:7]	GCLK clock frequency output Undivided	48	MHz
		GCLK clock frequency output Divided	32	MHz
FCLK_11	fGCLK_DFLL48M_REF	DFLL 48M reference clock frequency	33	KHz

32.10. OSC32K Electrical Specifications

Table 32-12. Internal 32.768 kHz RC Oscillator (OSC32K) AC Electrical Specifications

AC CHARACTERISTICS			Standard Operating Conditions: VDDIO = AVDD = VDD 2.7V to 3.63V (unless otherwise stated) **Operating temperature:** **-40°C ≤ TA ≤ +125°C for Extended Temp**				
Param. No.	**Symbol**	**Characteristics**	**Min.**	**Typ.**	**Max.**	**Units**	**Conditions**
OSC32K_3b	OSC32K_ACC	Accuracy	-2	—	2	%	TA = 25°C, AVDD = 3.3V
OSC32K_3c			-20	—	20	%	-40°C ≤ TA ≤ +125°C, 2.7V ≤ AVDD ≤ 3.63V
OSC32K_9	OSC32K_Duty	OSC32 Duty Cycle	—	50	—	%	TA = 25 °C , AVDD = 3.3V

32.11. OSC8M Electrical Specifications

Table 32-13. Internal 8 MHz RC Oscillator (OSC8M) AC Electrical Specifications

AC CHARACTERISTICS			Standard Operating Conditions: VDDIO = AVDD = VDD 2.7V to 3.63V (unless otherwise stated) **Operating temperature:** **-40°C ≤ TA ≤ +125°C for Extended Temp**				
Param. No.	**Symbol**	**Characteristics**	**Min.**	**Typ.**	**Max.**	**Units**	**Conditions**
OSC8M_1	FOSC8M	OSC8M Oscillator Frequency	7.57	—	8.36	MHz	-40°C ≤ TA ≤ +125°C, 2.7V ≤ AVDD ≤ 3.63V
			7.88	—	8.10	MHz	25°C, 3.3V
			7.87	—	8.10	MHz	25°C, 2.7V ≤ AVDD ≤ 3.63V
OSC8M_5	OSC8M_ST	OSC8M Oscillator Start-up Time	—	2.4	3.9	µs	—

© 2025 Microchip Technology Inc. and its subsidiaries

32.12. OSCULP32K Electrical Specifications

Table 32-14. Ultra-Low Power Internal 32 kHz RC Oscillator (OSCULP32K) AC Electrical Specifications

AC CHARACTERISTICS			Standard Operating Conditions: VDDIO = AVDD = VDD 2.7V to 3.63V (unless otherwise stated) **Operating Temperature:** **-40°C ≤ TA ≤ +125°C for Extended Temp**				
Param. No.	Symbol	Characteristics	Min.	Typ.	Max.	Units	Conditions
ULPRC32K_3	ULPRC32K_ACC	Accuracy	-25	—	25	%	-40°C ≤ TA ≤ +125°C , 2.7V ≤ AVDD ≤ 3.63V
			-7	—	7		TA = 25°C, 3.3V
			-8	—	8		TA = 25 °C , 2.7V ≤ AVDD ≤ 3.63V

32.13. DFLL Electrical Specifications

Table 32-15. DFLL48M (Digital Frequency Locked Loop) Electrical Specifications

AC CHARACTERISTICS			Standard Operating Conditions: VDDIO = AVDD = VDD 2.7V to 3.63V (unless otherwise stated) **Operating Temperature:** **-40°C ≤ TA ≤ +125°C for Extended Temp**				
Param. No.	Symbol	Characteristics	Min.	Typ.	Max.	Units	Conditions
DFLL48 MHz (Closed Loop)(1,2)							
DFLL_11	DFLL_CL_FIN(2)	DFLL Closed- Loop Input Frequency Range	0.732	32.768	33	kHz	—

Notes:

1. In Closed-Loop mode the DFLL can use a variety of clock sources. The DFLL can be trimmed using the DFLLMUL register.
2. To insure that the device stays within the maximum allowed clock frequency, any reference clock for DFLL in close loop must be within a 2% error accuracy.
3. DFLLMUL = 1464, DFLLVAL.FINE = 512, DFLLCTRL.BPLCKC = 1: only fine value change, coarse value locked to the reset value. DFLLCTRL.QLDIS = 0: Quick lock enable, DFLLCTRL.CCDIS = 1: Enabling chill cycles might double the lock time.

   DFLLMUL.FSTEP = 10: Maximum fine step size, divided or dividing into two parts, search. 10 is a optimum value.

32.14. Digital-to-Analog Converter (DAC) Electrical Specifications

Table 32-16. DAC AC Electrical Specifications

AC CHARACTERISTICS			Standard Operating Conditions: VDDIO = AVDD = VDD 2.7V to 3.63V (unless otherwise stated) **Operating Temperature:** **-40°C ≤ TA ≤ +125°C for Extended Temp**				
Param. No.	Symbol	Characteristics	Min.	Typ.	Max.	Units	Conditions
SINGLE-ENDED MODE(1,4,5)							
SDAC_23	GERR(3)	Gain Error	-14.9	—	-3.8	LSB	CTRLB.REFSEL = 0x1 VREF = AVDD = 3.3V with CLOAD and RLOAD
			-5.6	—	0.4	LSB	CTRLB.REFSEL = 0x2 AVDD = 3.3V VREF = VREFA with CLOAD and RLOAD

© 2025 Microchip Technology Inc. and its subsidiaries

Table 32-16. DAC AC Electrical Specifications (continued)

AC CHARACTERISTICS			Standard Operating Conditions: VDDIO = AVDD = VDD 2.7V to 3.63V (unless otherwise stated) **Operating Temperature:** **-40°C ≤ TA ≤ +125°C for Extended Temp**				
Param. No.	Symbol	Characteristics	Min.	Typ.	Max.	Units	Conditions
SDAC_25	EOFF(3)	Offset Error	-3.5	—	3.5	LSB	CTRLB.REFSEL = 0x1 VREF = AVDD = 3.3V with CLOAD and RLOAD
			-5.5	—	5.5	LSB	CTRLB.REFSEL = 0x2 AVDD = 3.3V VREF = VREFA with CLOAD and RLOAD

Notes:

1. The DAC functional device operation with either internal or external VREF < 2.4V is guaranteed, but not characterized. DAC will function, but with degraded performance. DAC accuracy is limited by users application noise/accuracy on AVDD, AGN,D and VREF accuracy/drift.
2. 10-bit mode.
3. Over VOUT range defined by the DAC_7 parameter.

32.15. Analog-to-Digital Converter (ADC) Electrical Specifications

Table 32-17. ADC AC Electrical Specifications

AC CHARACTERISTICS			Standard Operating Conditions: VDDIO=AVDD=VDD 2.7V to 3.63V (unless otherwise stated) **Operating temperature:** **-40°C ≤ TA ≤ +125°C for Extended Temp**				
Param. No.	Symbol	Characteristics	Min.	Typ.	Max.	Units	Conditions
Device Supply							
ADC_1	AVDD	ADC Module Supply	AVDD(min)		AVDD(max)	V	VDDIOx = AVDD
Reference Inputs							
ADC_3	VREF(1)	ADC Reference Voltage	Spec VR_1 to VR_3			V	VREF = INT1V (CTRL.REFSEL = 0x0)
			0.99*(AVDD / 1.48)	AVDD / 1.48	1.01*(AVDD / 1.48)	V	VREF = INTVCC0 (REFCTRL.REFSEL = 0x1)
			0.99*(AVDD / 2)	AVDD / 2	1.01*(AVDD / 2)	V	VREF = INTVCC1 (REFCTRL.REFSEL = 0x2) only for AVDD >2.0V
			2.4	—	AVDD-0.6V	V	AVDD ≥ VREF + 0.6V VREF = VREFA pin (REFCTRL.REFSEL = 0x3) VREF = VREFB pin (REFCTRL.REFSEL = 0x4)
Analog Input Range							
ADC_7	AFS	Full-Scale Analog Input Signal Range	0	—	VREF/Gain	V	Single-Ended Mode
ADC_9			-VREF/Gain	—	VREF/Gain	V	Differential Mode

© 2025 Microchip Technology Inc. and its subsidiaries

Table 32-17. ADC AC Electrical Specifications (continued)

AC CHARACTERISTICS			Standard Operating Conditions: VDDIO=AVDD=VDD 2.7V to 3.63V (unless otherwise stated) **Operating temperature:** **-40°C ≤ TA ≤ +125°C for Extended Temp**				
Param. No.	Symbol	Characteristics	Min.	Typ.	Max.	Units	Conditions
ADC_10	VCMIN	Input common mode voltage	0	—	0.7*AVDD + VREF/4 - 0.75	V	Single-Ended Mode
			VREF/4 - 0.05*AVDD -0.1	—	0.95*AVDD + VREF/4 - 0.75	V	Differential Mode if abs(VIN) > VREF / 4
			0.2*AVDD – 0.1	—	1.2*AVDD - 0.75	V	Differential Mode if abs(VIN) < VREF / 4
ADC_11	TSETTLING	ADC Stabilization Time	—	10	—	µs	CTRLA.ENABLE = 1

Note:

1. ADC functional device operation with either internal or external VREF<2.4V is functional, but not characterized.
   ADC will function, but with degraded accuracy of approximately ~((0.06 * 2n) / VREF) LSB's over full scale range, where "n"=#bits.
   ADC accuracy is limited by internal VREF accuracy + drift, MCU generated noise plus users application noise/accuracy on AVDD, AGND.

Table 32-18. ADC Single-Ended Mode AC Electrical Specifications

AC CHARACTERISTICS			Standard Operating Conditions: VDDIO=AVDD=VDD 2.7V to 3.63V (unless otherwise stated) **Operating temperature:** **-40°C ≤ TA ≤ +125°C for Extended Temp**				
Param. No.	Symbol	Characteristics	Min.	Typ.	Max.	Units	Conditions
SINGLE ENDED MODE ADC Accuracy(4, 5)							
SADC_11	Res	Resolution	8	—	12	bits	Selectable 8, 10, 12 bit Resolution Ranges
SADC_13	ENOB(1, 2)	Effective Number of bits	8.9	9.8	—	bits	REFCTRL.REFSEL= 0x3 or 0x4 VREFA or VREFB >= 2.4V REFCTRL.REFCOMP=0x1
SADC_19	INL	Integral Nonlinearity	-3	—	3	LSB	REFCTRL.REFSEL= 0x3 or 0x4 VREFA or VREFB >= 2.4V REFCTRL.REFCOMP=0x1
SADC_25	DNL	Differential Nonlinearity	-0.9	—	1	LSB	REFCTRL.REFSEL= 0x3 or 0x4 VREFA or VREFB >= 2.4V REFCTRL.REFCOMP=0x1
SADC_31	GERR	Gain Error	-9	—	7	LSB	REFCTRL.REFSEL= 0x3 or 0x4 VREFA or VREFB >= 2.4V REFCTRL.REFCOMP=0x1
SADC_37	EOFF	Offset Error	-30	—	30	LSB	REFCTRL.REFSEL= 0x3 or 0x4 VREFA or VREFB >= 2.4V REFCTRL.REFCOMP=0x1
SADC_43	TUE	Total Unadjusted Error	1.6	—	25.2	LSB	REFCTRL.REFSEL= 0x3 or 0x4 VREFA or VREFB >= 2.4V REFCTRL.REFCOMP=0x1
SINGLE ENDED MODE ADC Dynamic Performance (1,2,4,5)							

© 2025 Microchip Technology Inc. and its subsidiaries

Table 32-18. ADC Single-Ended Mode AC Electrical Specifications (continued)

AC CHARACTERISTICS			Standard Operating Conditions: VDDIO=AVDD=VDD 2.7V to 3.63V (unless otherwise stated) **Operating temperature:** **-40°C ≤ TA ≤ +125°C for Extended Temp**				
Param. No.	Symbol	Characteristics	Min.	Typ.	Max.	Units	Conditions
SADC_49	SINAD	Signal to Noise and Distortion	55.5	—	—	dB	REFCTRL.REFSEL= 0x3 or 0x4 VREFA or VREFB >= 2.4V REFCTRL.REFCOMP=0x1
SADC_51	SNR	Signal to Noise ratio	58	—	—		REFCTRL.REFSEL= 0x3 or 0x4 VREFA or VREFB >= 2.4V REFCTRL.REFCOMP=0x1
SADC_53	SFDR	Spurious Free Dynamic Range	70	—	—		REFCTRL.REFSEL= 0x3 or 0x4 VREFA or VREFB >= 2.4V REFCTRL.REFCOMP=0x1
SADC_55	THD (3)	Total Harmonic Distortion	—	—	-59.2		REFCTRL.REFSEL= 0x3 or 0x4 VREFA or VREFB >= 2.4V REFCTRL.REFCOMP=0x1

Notes:

1. Characterized with an analog input sine wave = 40kHz sine wave.
2. Sine wave peak amplitude = 95% ADC_ Full Scale amplitude input with 12bit resolution.
3. Value taken over 7 harmonics.
4. ADC is configured in 12bits mode, All registers are at the reset default value unless otherwise stated.
5. The ADC channels are powered from AVDD except channels on pins PA08, PA09, PA10, PA11 which are powered from VDDIO. The ADC specifications are only applicable to the channels powered from AVDD. Performances of the channels powered from VDDIO are dependent on the activity of the system and therefore application dependent.

Table 32-19. ADC Differential Mode AC Electrical Specifications

AC CHARACTERISTICS			Standard Operating Conditions: VDDIO=AVDD=VDD 2.7V to 3.63V (unless otherwise stated) **Operating temperature:** **-40°C ≤ TA ≤ +125°C for Extended Temp**				
Param. No.	Symbol	Characteristics	Min.	Typ.	Max.	Units	Conditions
DIFFERENTIAL MODE ADC Accuracy(4, 5)							
DADC_11	Res	Resolution	8	—	12	bits	Selectable 8, 10, 12 bit Resolution Ranges
DADC_13	ENOB (1, 2)	Effective Number of bits	10	10.7	—	bits	REFCTRL.REFSEL= 0x3 or 0x4 VREFA or VREFB >= 2.4V REFCTRL.REFCOMP=0x1
DADC_19	INL	Integral Nonlinearity	-1.7	—	1.7	LSB	REFCTRL.REFSEL= 0x3 or 0x4 VREFA or VREFB >= 2.4V REFCTRL.REFCOMP=0x1
DADC_25	DNL	Differential Nonlinearity	-0.8	—	0.8	LSB	REFCTRL.REFSEL= 0x3 or 0x4 VREFA or VREFB >= 2.4V REFCTRL.REFCOMP=0x1
DADC_31	GERR	Gain Error	-10	—	4	LSB	REFCTRL.REFSEL= 0x3 or 0x4 VREFA or VREFB >= 2.4V REFCTRL.REFCOMP=0x1
DADC_37	EOFF	Offset Error	-14	—	14	LSB	REFCTRL.REFSEL= 0x3 or 0x4 VREFA or VREFB >= 2.4V REFCTRL.REFCOMP=0x1
DADC_43	TUE	Total Unadjusted Error	0.8	—	13.8	LSB	REFCTRL.REFSEL= 0x3 or 0x4 VREFA or VREFB >= 2.4V REFCTRL.REFCOMP=0x1

© 2025 Microchip Technology Inc. and its subsidiaries

Table 32-19. ADC Differential Mode AC Electrical Specifications (continued)

AC CHARACTERISTICS			Standard Operating Conditions: VDDIO=AVDD=VDD 2.7V to 3.63V (unless otherwise stated) **Operating temperature:** **-40°C ≤ TA ≤ +125°C for Extended Temp**				
Param. No.	Symbol	Characteristics	Min.	Typ.	Max.	Units	Conditions
DIFFERENTIAL MODE ADC Dynamic Performance (1,2,4,5)							
DADC_49	SINAD	Signal to Noise and Distortion	62	—	—	dB	REFCTRL.REFSEL= 0x3 or 0x4 VREFA or VREFB >= 2.4V REFCTRL.REFCOMP=0x1
DADC_51	SNR	Signal to Noise ratio	64.5	—	—		REFCTRL.REFSEL= 0x3 or 0x4 VREFA or VREFB >= 2.4V REFCTRL.REFCOMP=0x1
DADC_53	SFDR	Spurious Free Dynamic Range	79	—	—		REFCTRL.REFSEL= 0x3 or 0x4 VREFA or VREFB >= 2.4V REFCTRL.REFCOMP=0x1
DADC_55	THD (3)	Total Harmonic Distortion	—	—	-64.4		REFCTRL.REFSEL= 0x3 or 0x4 VREFA or VREFB >= 2.4V REFCTRL.REFCOMP=0x1

Notes:

1. Characterized with an analog input sine wave = 40kHz sine wave.
2. Sine wave peak amplitude = 95% ADC_ Full Scale amplitude input with 12bit resolution.
3. Value taken over 7 harmonics.
4. ADC is configured in 12bits mode, All registers are at the reset default value unless otherwise stated.
5. The ADC channels are powered from AVDD except channels on pins PA08, PA09, PA10, PA11 which are powered from VDDIO. The ADC specifications are only applicable to the channels powered from AVDD. Performances of the channels powered from VDDIO are dependent onto the activity of the system and thus application dependent.

Table 32-20. ADC Conversion and Sample AC Electrical Requirements

AC CHARACTERISTICS			Standard Operating Conditions: VDDIO=AVDD=VDD 2.7V to 3.63V (unless otherwise stated) **Operating temperature:** **-40°C ≤ TA ≤ +125°C for Extended Temp**				
Param. No.	Symbol	Characteristics	Min.	Typ.	Max.	Units	Conditions
ADC Clock Requirements							
ADC_57	TAD	ADC Clock Period	476.2	—	8333.3	ns	—
ADC_58	fGCLK_ADCx	ADCx Module GCLK max input freq	—	—	FCLK_51	MHz	—
ADC Single-Ended Throughput Rates							

© 2025 Microchip Technology Inc. and its subsidiaries

Table 32-20. ADC Conversion and Sample AC Electrical Requirements (continued)

AC CHARACTERISTICS			Standard Operating Conditions: VDDIO=AVDD=VDD 2.7V to 3.63V (unless otherwise stated) **Operating temperature:** **-40°C ≤ TA ≤ +125°C for Extended Temp**				
Param. No.	Symbol	Characteristics	Min.	Typ.	Max.	Units	Conditions
ADC_59	FTP [1] (Single-Ended Mode)	Throughput Rate (Single-Ended)	—	—	300	KSPS	12-bit resolution, Rsource ≤ 8,750 Ω, SAMPCTRL.SAMPLEN = 0 () CTRLB.FREERUN = 0x1 INPUTCTRL.GAIN=0x0
			—	—	300		12 -bit resolution, Rsource ≤ 8,750 Ω, SAMPCTRL.SAMPLEN = 0 () CTRLB.FREERUN = 0x0 INPUTCTRL.GAIN=0x0
			—	—	262.5		12 -bit resolution, Rsource ≤ 8,750 Ω, SAMPCTRL.SAMPLEN = 0 () CTRLB.FREERUN = 0x0 INPUTCTRL.GAIN=0x1,0x2 or 0xF
			—	—	233.3		12 -bit resolution, Rsource ≤ 8,750 Ω, SAMPCTRL.SAMPLEN = 0 () CTRLB.FREERUN = 0x0 INPUTCTRL.GAIN=0x3 or 0x4
ADC Differential Mode Throughput Rates							
ADC_61	FTP [1] (Differential Mode)	Throughput Rate (Differential Mode)	—	—	350	KSPS	12-bit resolution, Rsource ≤ 8,750 Ω, SAMPCTRL.SAMPLEN = 0 () CTRLB.FREERUN = 0x1 INPUTCTRL.GAIN=0x0
			—	—	300		12 -bit resolution, Rsource ≤ 8,750 Ω, SAMPCTRL.SAMPLEN = 0 () CTRLB.FREERUN = 0x0 INPUTCTRL.GAIN=0x0, 0x1 or 0xF
			—	—	262.5		12 -bit resolution, Rsource ≤ 8,750 Ω, SAMPCTRL.SAMPLEN = 0 () CTRLB.FREERUN = 0x0 INPUTCTRL.GAIN=0x2 or 0x3
			—	—	233.3		12 -bit resolution, Rsource ≤ 8,750 Ω, SAMPCTRL.SAMPLEN = 0 () CTRLB.FREERUN = 0x0 INPUTCTRL.GAIN=0x4
ADC Conversion and Sample time							

© 2025 Microchip Technology Inc. and its subsidiaries

Table 32-20. ADC Conversion and Sample AC Electrical Requirements (continued)

AC CHARACTERISTICS			Standard Operating Conditions: VDDIO=AVDD=VDD 2.7V to 3.63V (unless otherwise stated) **Operating temperature:** **-40°C ≤ TA ≤ +125°C for Extended Temp**				
Param. No.	Symbol	Characteristics	Min.	Typ.	Max.	Units	Conditions
ADC_63	TSAMP(2)	ADC Sample Time	1	—	—	TAD	12-bit resolution, TAD(min), Ext Analog Input Rsource ≤ 8,750 Ω
			2	—	—		12-bit resolution, TAD(min), Ext Analog Input Rsource ≤ 21,000 Ω
			3	—	—		12-bit resolution, TAD(min), Ext Analog Input Rsource ≤ 33,300 Ω
			4	—	—		12-bit resolution, TAD(min), Ext Analog Input Rsource ≤ 45,550 Ω
			5	—	—		12-bit resolution, TAD(min), Ext Analog Input Rsource ≤ 57,800 Ω
			6	—	—		12-bit resolution, TAD(min), Ext Analog Input Rsource ≤ 70,100 Ω
			10	—	—	µs	With temperature sensor as input - INPUTCTRL.MUXPOS=0x18
			10	—	—		With bandgap as input - INPUTCTRL.MUXPOS=0x19
			0.25				with SCALEDCOREVCC or SCALEDIOVCC as input - INPUTCTRL.MUXPOS=0x1A ot 0x1B
			3				With DAC as input - INPUTCTRL.MUXPOS=0x1C
ADC_65	TCNV(1)	Conversion Time (Single-Ended Mode)	7			TAD	12-bit resolution - INPUTCTRL.GAIN=0x0 (Gain 1x)
			8				12-bit resolution - INPUTCTRL.GAIN=0x1, 0x2 or 0xF (Gain 0.5x, 2x, 4x)
			9				12-bit resolution - INPUTCTRL.GAIN=0x3 or 0x4 (Gain 8x, 16x)
ADC_67		Conversion Time (Differential Mode)	6			TAD	12-bit resolution - INPUTCTRL.GAIN=0x0 (Gain 1x)
			7				12-bit resolution - INPUTCTRL.GAIN=0x1, 0x2 or 0xF (Gain 0.5x, 2x, 4x)
			8				12-bit resolution - INPUTCTRL.GAIN=0x3 or 0x4 (Gain 8x, 16x)
ADC_69	CSAMPLE	ADC Internal Sample Cap	—	3.5	4	pF	—
ADC_71	RSAMPLE	ADC Internal impedance	—	—	3500	Ω	—

Notes:

1. ADC Throughput Rate FTP = ((1 / ((TSAMP + TCNV) * TAD)) / (# of user active analog inputs in use on specific target ADC module)). Refer to Table 27-2. Delay Gain for more details.
   Note: Specification values assume only one AINx channel in use.
2. TSAMP = (((RSAMPLE + RSOURCE) * CSAMPLE * 9.7) / TAD)+1 rounded down to nearest whole integer.
   User SAMPCTRL.SAMPLEN = (2*TSAMP - 1).

32.15.1. Performance with the Averaging Digital Feature

Averaging is a feature which increases the sample accuracy. ADC automatically computes an average value of multiple consecutive conversions. The numbers of samples to be averaged is specified by the Number-of-Samples-to-be-Collected bit group in the Average Control register (AVGCTRL.SAMPLENUM[3:0]) and the averaged output is available in the Result register (RESULT).

© 2025 Microchip Technology Inc. and its subsidiaries

Table 32-21. Averaging Feature

Average Number	Conditions	SNR(dB)	SINAD (dB)	SFDR (dB)	ENOB (bits)
1	In Differential mode, 1x gain, AVDD = 3.0V, VREF = 2.4V, 350 ksps T = 25°C	66	65	85	10.5
8		68	66	87	11.4
32		70	67	88	11.6
128		71	67	88	11.7

32.15.2. Performance with the Hardware Offset and Gain Correction

Inherent gain and offset errors affect the absolute accuracy of the ADC. The offset error cancellation is handled by the Offset Correction register (OFFSETCORR) and the gain error cancellation, by the Gain Correction register (GAINCORR). The offset and gain correction value is subtracted from the converted data before writing the Result register (RESULT).

Table 32-22. Offset and Gain Correction Features

Gain Factor	Conditions	Offset Error (mV)	Gain Error (mV)	Total Unadjusted Error (LSB)
0.5x INPUTCTRL.GAIN = 0xF	In Differential mode, AVDD = 3.0V, VREF = 2.4V, 350 ksps T = 25°C	0.25	1	2.4
1x INPUTCTRL.GAIN = 0x0		0.2	0.1	1.5
2x INPUTCTRL.GAIN = 0x1		0.15	-0.15	2.7
8x INPUTCTRL.GAIN = 0x3		-0.05	0.05	3.2
16x INPUTCTRL.GAIN = 0x4		0.1	-0.05	6.1

32.15.3. Inputs and Sample and Hold Acquisition Times

The analog voltage source must be able to charge the Sample-and-Hold (S/H) capacitor in the ADC to achieve maximum accuracy. Seen externally the ADC input consists of a resistor (RSAMPLE) and a capacitor (CSAMPLE). In addition, the source resistance (RSOURCE) must be considered when calculating the required S/H time. The following figure shows the ADC input channel equivalent circuit.

Figure 32-1. ADC Input

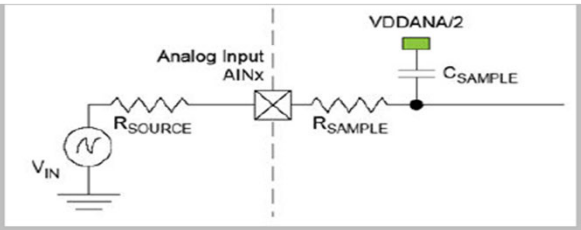

The minimum sampling time $t_{samplehold}$ for a given R_{source} can be found using a general formula:

$$t_{samplehold} \geq (R_{sample} + R_{source}) \times C_{sample} \times (n+2) \times \ln(2)$$

For 12-bit accuracy, this turns into:

$$t_{samplehold} \geq (R_{sample} + R_{source}) \times C_{sample} \times 9.7$$

© 2025 Microchip Technology Inc. and its subsidiaries

32.16. Analog Comparator (AC) Electrical Specifications

Table 32-23. Comparator AC Electrical Specifications

AC CHARACTERISTICS			Standard Operating Conditions: VDDIO = AVDD = VDD 2.7V to 3.63V (unless otherwise stated) **Operating Temperature:** **-40°C ≤ TA ≤ +125°C for Extended Temp**				
Param. No.	**Symbol**	**Characteristics**	**Min.**	**Typ**	**Max.**	**Units**	**Conditions**
CMP_1	VIOFF_00	Input Offset Voltage	-28	—	28	mV	COMPCTRLx.HYST = 0x0 COMPCTRLx.SPEED = 0x0
	VIOFF_02		-26	—	26	mV	COMPCTRLx.HYST = 0x0 COMPCTRLx.SPEED = 0x1
CMP_4	VIN	Input Voltage Range	AGND	—	AVDD	V	With respect to AGND and AVDD
CMP_5	VHYST_00	Input Hysteresis Voltage	14	40	75	mV	COMPCTRLx.HYST = 0x1 COMPCTRLx.SPEED = 0x0
	VHYST_01	Input Hysteresis Voltage	8	50	102	mV	COMPCTRLx.HYST = 0x1 COMPCTRLx.SPEED = 0x1
CMP_15	TRESPSS_LS(2)	Small Signal Response Time, low speed	—	300	535	ns	Comparator ref voltage=AVDD/2 COMPCTRLx.HYST = 0x0 Input overdrive = ± 100 mv COMPCTRL.SPEED = 0x0
CMP_17	TRESPSS_HS(2)	Small Signal Response Time, high speed	—	50	83	ns	Comparator reference voltage = AVDD/2 COMPCTRLx.HYST = 0x0 Input overdrive = ± 100 mv COMPCTRLx.SPEED = 0x1
CMP_19	COUTVAL_01	Comparator Enabled to Output Valid	—	12	23	µs	Comparator module is configured before enabling it COMPCTRLx.SPEED = 0x0
	COUTVAL_02		—	1	2.8	µs	Comparator module is configured before enabling it COMPCTRLx.SPEED = 0x1

Notes:

1. Comparator Reference voltage cannot exceed: (VIN(max) - VIOFF(max) - CMP_5(max) - 50mV) ≥CMP_23 ≥ (VIN(min) + abs(VIOFF(min)) + CMP_5(max) + 50mV).
2. TRESPss_XX is measured from VIN transition to CMPx output toggle. It takes into account only analog propagation delay.

Table 32-24. DAC Module AC Electrical Specifications

AC CHARACTERISTICS			Standard Operating Conditions: VDDIO = AVDD = VDD 2.7V to 3.63V (unless otherwise stated) **Operating Temperature:** **-40°C ≤ TA ≤ +125°C for Extended Temp**				
Param. No.	**Symbol**	**Characteristics**	**Min.**	**Typ**	**Max.**	**Units**	**Conditions**
VSCALE_7	INL	Integral Non Linearity	-1.6	—	1.6	LSB	—
VSCALE_9	DNL	Differential Non Linearity	-0.95	—	0.95	LSB	—
VSCALE_11	GERR	Gain Error	-0.9	—	2	LSB	—
VSCALE_13	EOFF	Offset Error	-0.2	—	1.04	LSB	—

© 2025 Microchip Technology Inc. and its subsidiaries

32.17. SPI Mode Electrical Specifications

Figure 32-2. SERCOM SPIx Host Module (CPHA = 0) Timing Diagrams

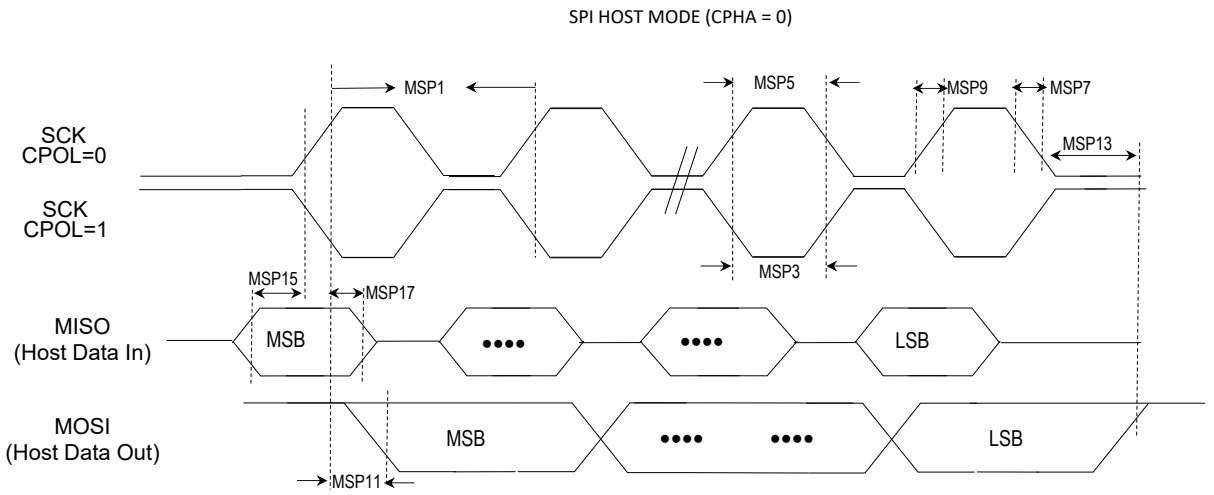

Figure 32-3. SERCOM SPIx Host Module (CPHA = 1) Timing Diagrams

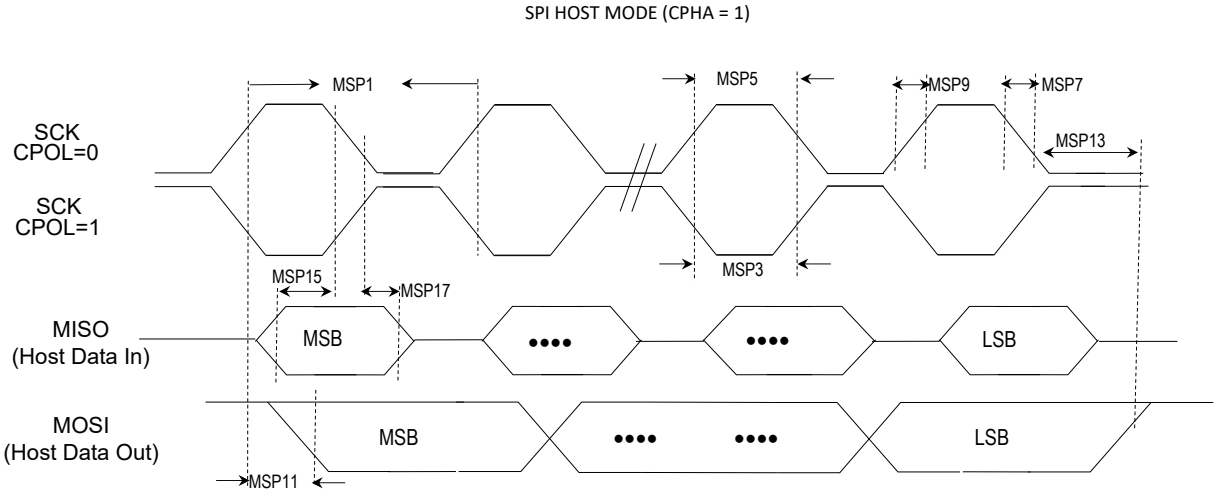

Table 32-25. SERCOM SPI Module Host Mode Electrical Specifications [(1)]

AC CHARACTERISTICS			Standard Operating Conditions: VDDIO=AVDD=VDD 2.7V to 3.63V (unless otherwise stated) **Operating temperature :** **-40°C ≤ TA ≤ +125°C for Extended Temp**				
Param. No.	Symbol	Characteristics[(1)]	Min.	Typ.	Max.	Units	Conditions
MSP_15	TMIS	MISO Setup Time of Data Input to SCK	51.7	—	—	ns	—

Notes:

1. Assumes VDDIOx(min) and 30pF external load on all SPIx pins unless otherwise noted.
2. NOTE2_TV is the client external device data output valid time from clock edge specification.

© 2025 Microchip Technology Inc. and its subsidiaries

32.18. NVM Block (Flash, Data Flash, NVM Configuration Rows) Electrical Specifications

Table 32-26. Flash NVM AC Electrical Specifications

AC CHARACTERISTICS				Standard Operating Conditions: VDDIO = AVDD = VDD 2.7V to 3.63V (unless otherwise stated) **Operating Temperature:** **-40°C ≤ TA ≤ +125°C for Extended Temp**				
Param. No.	Symbol	Characteristics		Min.	Typ.	Max.	Units	Conditions
NVM_1	FRETEN	Flash Data Retention		20	—	—	Yrs	Under all conditions less than Absolute Maximum Ratings specifications
NVM_3	EP	Cell Endurance (Flash Erase and Write Operation)		25000	—	—	Cycles	
NVM_5	FREAD	Flash Read	0 Wait States	—	—	24	MHz	VDD = 2.7V to 3.63V
			1 Wait States	—	—	32		
NVM_7	TFPW	Program Cycle Time	Write Page(2)	—	—	2.5	ms	VDD = 3.3V
NVM_9	TCE		Erase Chip	—	—	240	ms	
NVM_11	TFER		Erase Row	—	—	6	ms	

Notes:

1. Maximum Flash operating frequencies are given in the table above, but are limited by the Embedded Flash access time when the processor is fetching code out of it. Theses tables provide the device maximum operating frequency defined by the RWS field of the NVMCTRL CTRLA register. This field defines the number of Wait states required to access the Embedded Flash Memory.
2. For this Flash technology, a maximum number of eight consecutive writes is allowed per row. Once this number is reached, a row erase is mandatory.

© 2025 Microchip Technology Inc. and its subsidiaries

33. Packaging Information

33.1. Package Drawings

Note: For current package drawings, refer to the Microchip Packaging Specification, which is available at http://www.microchip.com/packaging.

Note: For QFN packages with an exposed die attach pad: The exposed die attach pad is not connected electrically inside the device. It is recommenced to attach (solder) the exposed pad to a matching perimeter landing beneath the package punctuated with vias to the ground layer.

© 2025 Microchip Technology Inc. and its subsidiaries

33.1.1. 64-Pin TQFP

64-Lead Plastic Thin Quad Flatpack (V2X)-10x10x1 mm Body, 2.00 mm Footprint [TQFP]

Note:	For the most current package drawings, please see the Microchip Packaging Specification located at http://www.microchip.com/packaging

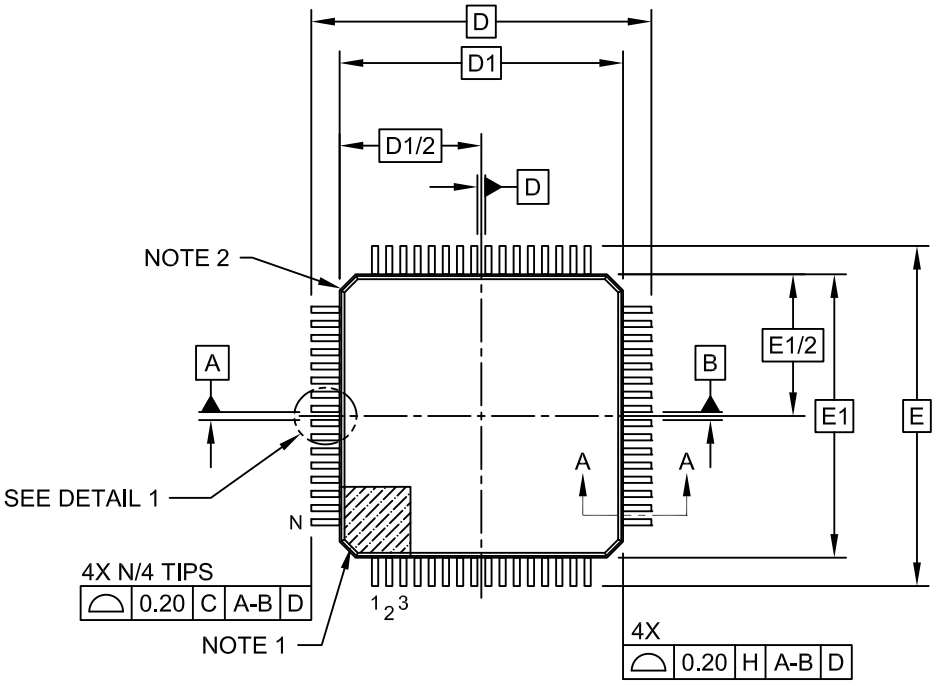

TOP VIEW

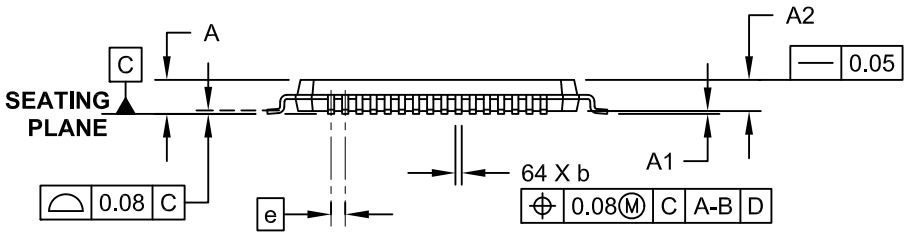

SIDE VIEW

Microchip Technology Drawing C04-085-V2X Rev E Sheet 1 of 2

© 2025 Microchip Technology Inc. and its subsidiaries

64-Lead Plastic Thin Quad Flatpack (V2X)-10x10x1 mm Body, 2.00 mm Footprint [TQFP]

Note: For the most current package drawings, please see the Microchip Packaging Specification located at http://www.microchip.com/packaging

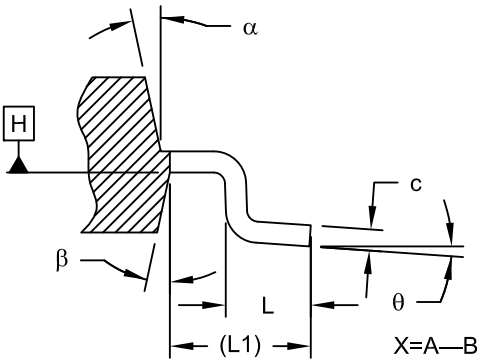

SECTION A-A

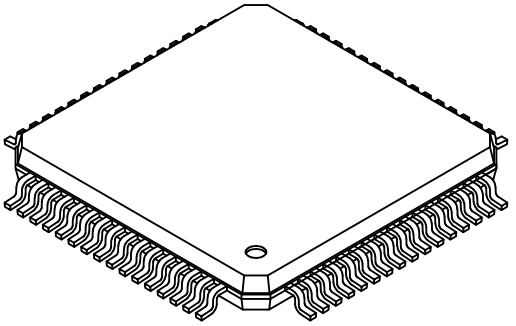

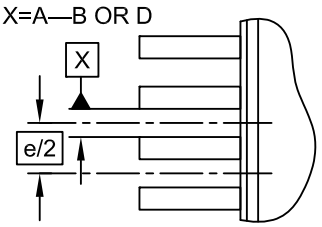

DETAIL 1

Units		MILLIMETERS		
Dimension Limits		MIN	NOM	MAX
Number of Leads	N	64		
Lead Pitch	e	0.50 BSC		
Overall Height	A	-	-	1.20
Molded Package Thickness	A2	0.95	1.00	1.05
Standoff	A1	0.05	-	0.15
Foot Length	L	0.45	0.60	0.75
Footprint	L1	1.00 REF		
Foot Angle	θ	0°	3.5°	7°
Overall Width	E	12.00 BSC		
Overall Length	D	12.00 BSC		
Molded Package Width	E1	10.00 BSC		
Molded Package Length	D1	10.00 BSC		
Lead Thickness	c	0.09	-	0.20
Lead Width	b	0.17	0.22	0.27
Mold Draft Angle Top	α	11°	12°	13°
Mold Draft Angle Bottom	β	11°	12°	13°

Notes:

1. Pin 1 visual index feature may vary, but must be located within the hatched area.
2. Chamfers at corners are optional; size may vary.
3. Dimensions D1 and E1 do not include mold flash or protrusions. Mold flash or protrusions shall not exceed 0.25mm per side.
4. Dimensioning and tolerancing per ASME Y14.5M

   BSC: Basic Dimension. Theoretically exact value shown without tolerances.

   REF: Reference Dimension, usually without tolerance, for information purposes only.

Microchip Technology Drawing C04-085-V2X Rev E Sheet 2 of 2

© 2025 Microchip Technology Inc. and its subsidiaries

64-Lead Plastic Thin Quad Flatpack (V2X) 10x10x1 mm Body, 2.00 mm Footprint [TQFP]

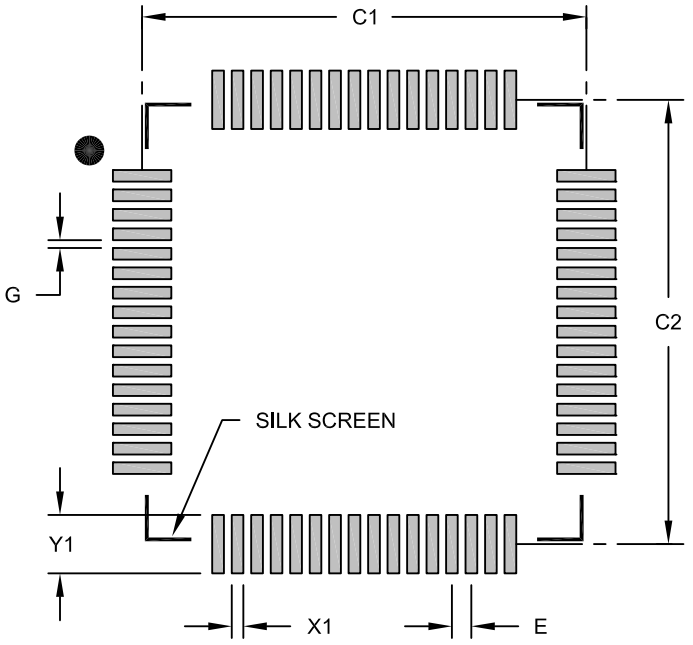

RECOMMENDED LAND PATTERN

Units		MILLIMETERS		
Dimension Limits		MIN	NOM	MAX
Contact Pitch	E		0.50 BSC	
Contact Pad Spacing	C1		11.40	
Contact Pad Spacing	C2		11.40	
Contact Pad Width (X64)	X1			0.30
Contact Pad Length (X64)	Y1			1.50
Distance Between Pads	G	0.20		

Notes:

1. Dimensioning and tolerancing per ASME Y14.5M
   BSC: Basic Dimension. Theoretically exact value shown without tolerances.

Microchip Technology Erawing C04-2085-V2X Rev E

© 2025 Microchip Technology Inc. and its subsidiaries

33.1.2. 64-Pin VQFN

64-Lead Very Thin Plastic Quad Flat, No Lead Package (5LX) - 9x9x1.0 mm Body [VQFN] With 5.4 mm Exposed Pad and Stepped Wettable Flanks

Note:	For the most current package drawings, please see the Microchip Packaging Specification located at http://www.microchip.com/packaging

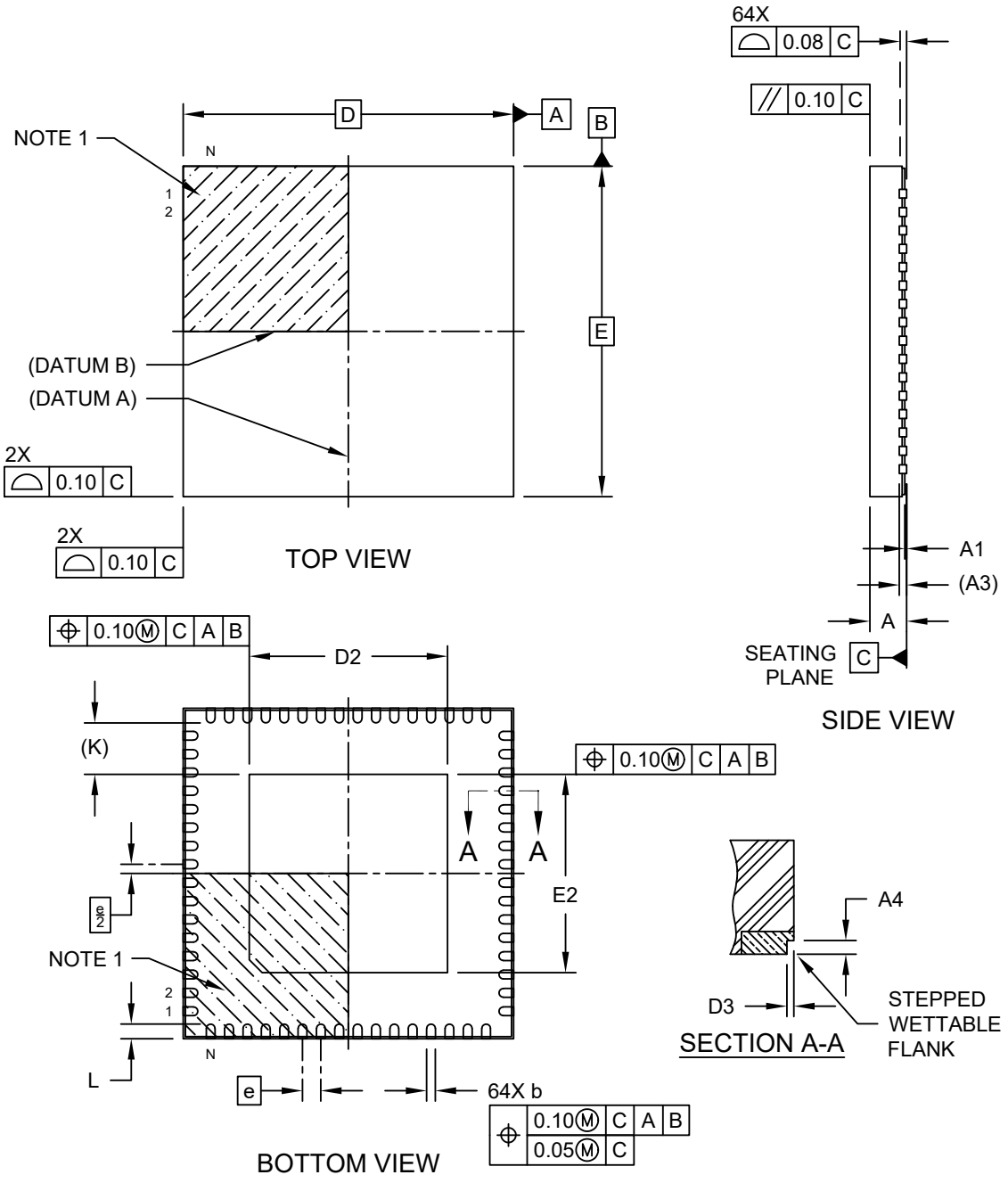

Microchip Technology Drawing C04-483-5LX Rev F Sheet 1 of 2

© 2025 Microchip Technology Inc. and its subsidiaries

64-Lead Very Thin Plastic Quad Flat, No Lead Package (5LX) - 9x9x1.0 mm Body [VQFN] With 5.4 mm Exposed Pad and Stepped Wettable Flanks

Note: For the most current package drawings, please see the Microchip Packaging Specification located at http://www.microchip.com/packaging

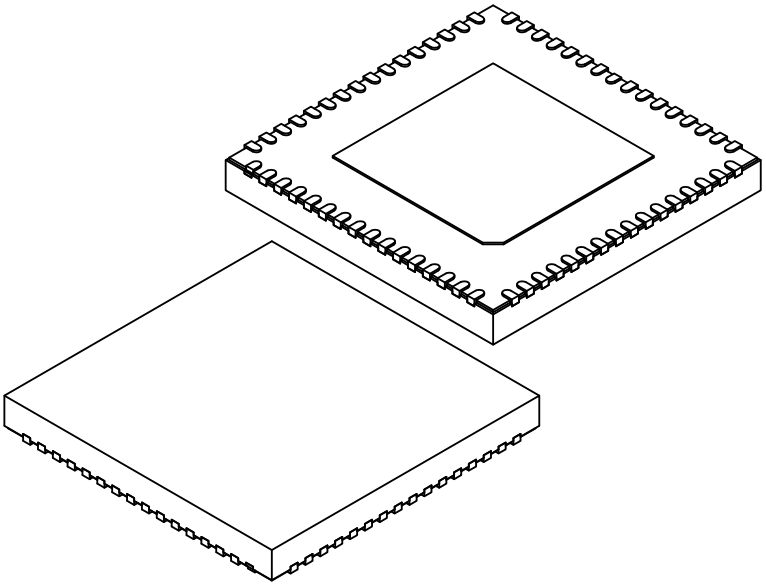

Units		MILLIMETERS		
Dimension Limits		MIN	NOM	MAX
Number of Terminals	N	64		
Pitch	e	0.50 BSC		
Overall Height	A	0.80	0.90	1.00
Standoff	A1	0.00	0.02	0.05
Terminal Thickness	A3	0.203 REF		
Overall Length	D	9.00 BSC		
Exposed Pad Length	D2	5.30	5.40	5.50
Overall Width	E	9.00 BSC		
Exposed Pad Width	E2	5.30	5.40	5.50
Terminal Width	b	0.20	0.25	0.30
Terminal Length	L	0.30	0.40	0.50
Terminal-to-Exposed-Pad	K	1.40 REF		
Wettable Flank Step Length	D3	0.035	0.060	0.085
Wettable Flank Step Height	A4	0.10	-	0.19

Notes:

1. Pin 1 visual index feature may vary, but must be located within the hatched area.
2. Package is saw singulated
3. Dimensioning and tolerancing per ASME Y14.5M
   BSC: Basic Dimension. Theoretically exact value shown without tolerances.
   REF: Reference Dimension, usually without tolerance, for information purposes only.

Microchip Technology Drawing C04-483-5LX Rev F Sheet 2 of 2

© 2025 Microchip Technology Inc. and its subsidiaries

64-Lead Very Thin Plastic Quad Flat, No Lead Package (5LX) - 9x9x1.0 mm Body [VQFN] With 5.4 mm Exposed Pad and Stepped Wettable Flanks

Note: For the most current package drawings, please see the Microchip Packaging Specification located at http://www.microchip.com/packaging

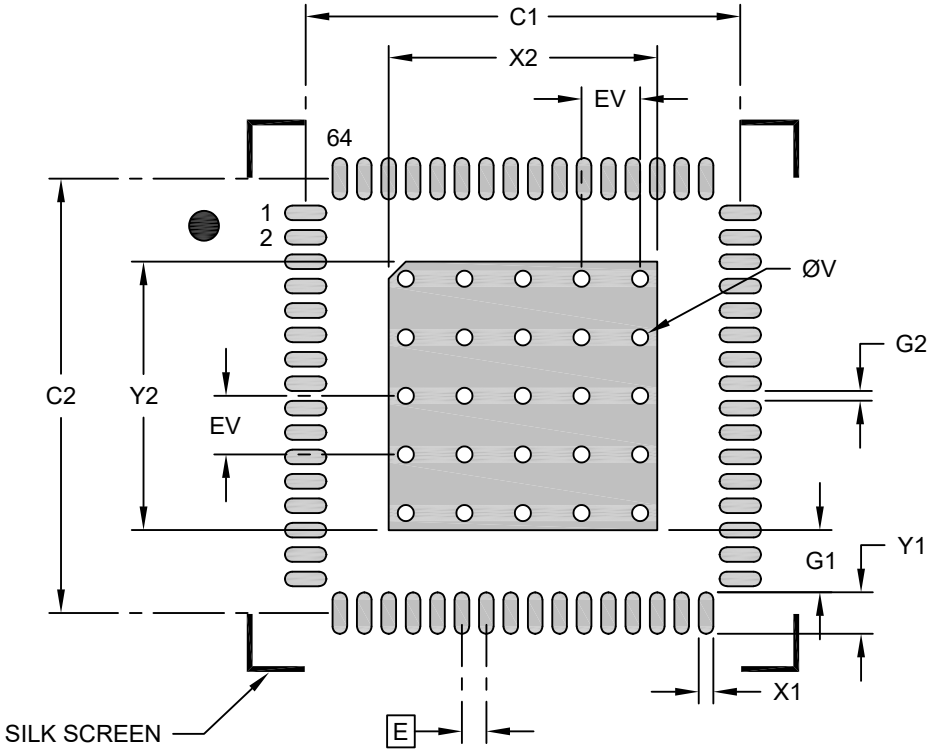

RECOMMENDED LAND PATTERN

Units		MILLIMETERS		
Dimension Limits		MIN	NOM	MAX
Contact Pitch	E		0.50 BSC	
Optional Center Pad Width	X2			5.50
Optional Center Pad Length	Y2			5.50
Contact Pad Spacing	C1		8.90	
Contact Pad Spacing	C2		8.90	
Contact Pad Width (X64)	X1			0.30
Contact Pad Length (X64)	Y1			0.85
Contact Pad to Center Pad (X64)	G1	1.28		
Contact Pad to Contact Pad (X60)	G2	0.20		
Thermal Via Diameter	V		0.33	
Thermal Via Pitch	EV		1.20	

Notes:

1. Dimensioning and tolerancing per ASME Y14.5M
   BSC: Basic Dimension. Theoretically exact value shown without tolerances.
2. For best soldering results, thermal vias, if used, should be filled or tented to avoid solder loss during reflow process

Microchip Technology Drawing C04-2483-5LX Rev F

© 2025 Microchip Technology Inc. and its subsidiaries

33.1.3. 48-Pin TQFP

48-Lead Plastic Thin Quad Flatpack (Y8X) - 7x7x1.0 mm Body [TQFP]

Note:	For the most current package drawings, please see the Microchip Packaging Specification located at http://www.microchip.com/packaging

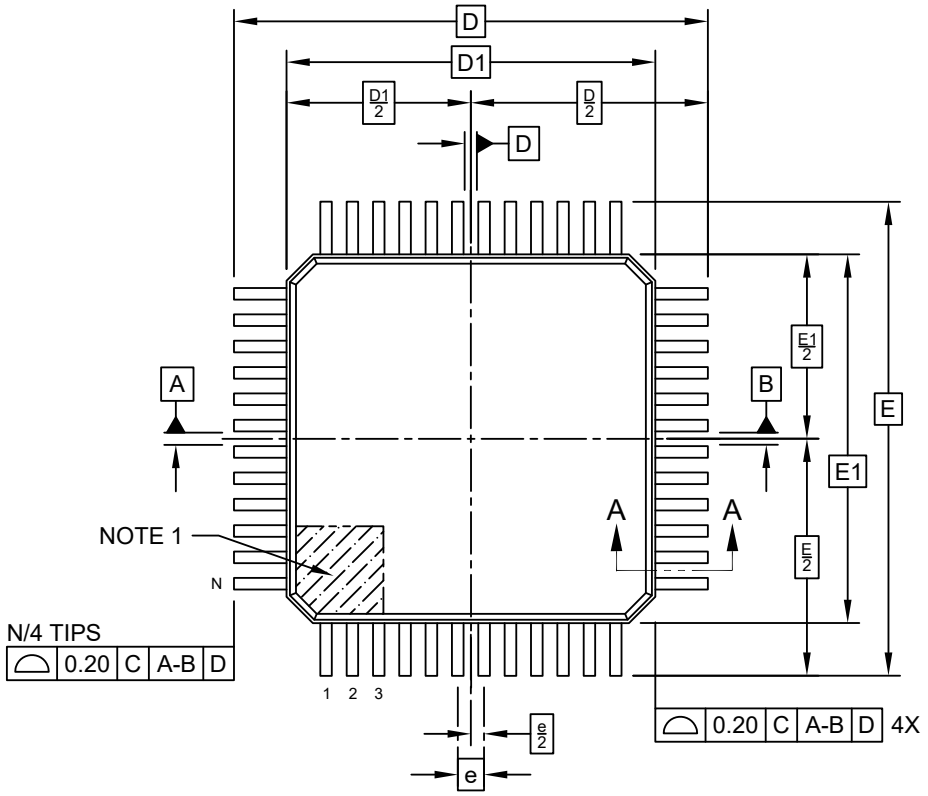

TOP VIEW

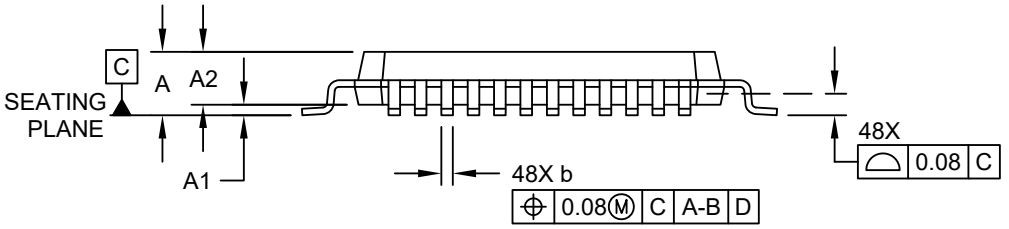

SIDE VIEW

Microchip Technology Drawing C04-300-Y8 Rev D Sheet 1 of 2

© 2025 Microchip Technology Inc. and its subsidiaries

48-Lead Plastic Thin Quad Flatpack (Y8X) - 7x7x1.0 mm Body [TQFP]

Note: For the most current package drawings, please see the Microchip Packaging Specification located at http://www.microchip.com/packaging

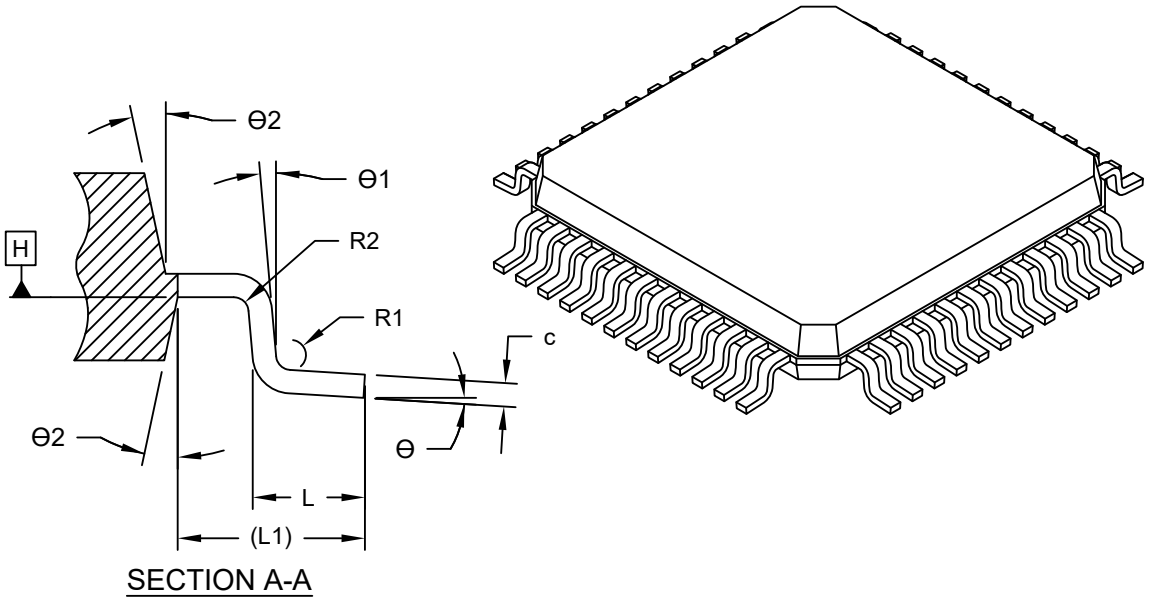

Units		MILLIMETERS		
Dimension Limits		MIN	NOM	MAX
Number of Terminals	N	48		
Pitch	e	0.50 BSC		
Overall Height	A	-	-	1.20
Standoff	A1	0.05	-	0.15
Molded Package Thickness	A2	0.95	1.00	1.05
Overall Length	D	9.00 BSC		
Molded Package Length	D1	7.00 BSC		
Overall Width	E	9.00 BSC		
Molded Package Width	E1	7.00 BSC		
Terminal Width	b	0.17	0.22	0.27
Terminal Thickness	c	0.09	-	0.16
Terminal Length	L	0.45	0.60	0.75
Footprint	L1	1.00 REF		
Lead Bend Radius	R1	0.08	-	-
Lead Bend Radius	R2	0.08	-	0.20
Foot Angle	Θ	0°	3.5°	7°
Lead Angle	Θ1	0°	-	-
Mold Draft Angle	Θ2	11°	12°	13°

Notes:

1. Pin 1 visual index feature may vary, but must be located within the hatched area.
2. Dimensioning and tolerancing per ASME Y14.5M
   BSC: Basic Dimension. Theoretically exact value shown without tolerances.
   REF: Reference Dimension, usually without tolerance, for information purposes only.

Microchip Technology Drawing C04-300-Y8 Rev D Sheet 2 of 2

© 2025 Microchip Technology Inc. and its subsidiaries

48-Lead Plastic Thin Quad Flatpack (Y8X) - 7x7x1.0 mm Body [TQFP]

Note: For the most current package drawings, please see the Microchip Packaging Specification located at http://www.microchip.com/packaging

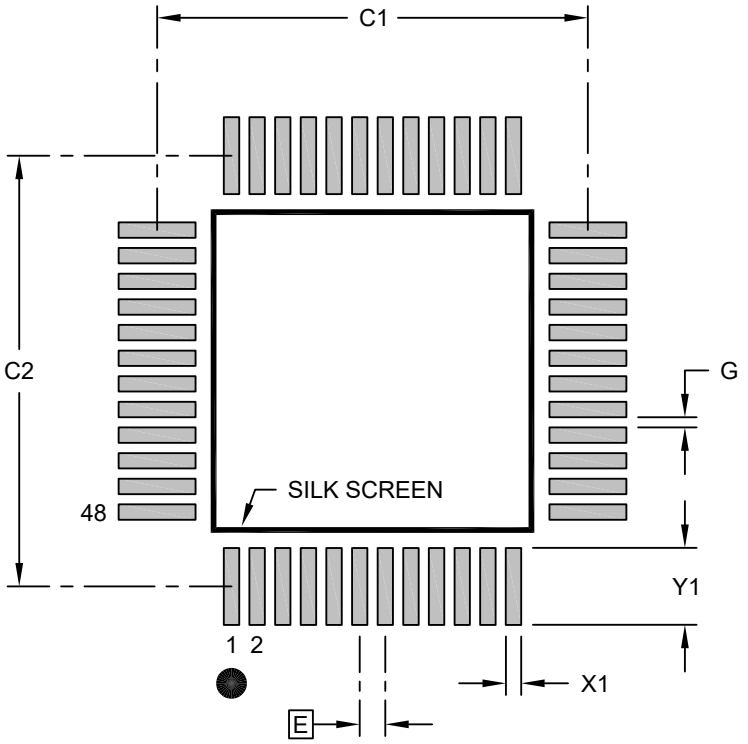

RECOMMENDED LAND PATTERN

Units		MILLIMETERS		
Dimension Limits		MIN	NOM	MAX
Contact Pitch	E	0.50 BSC		
Contact Pad Spacing	C1		8.40	
Contact Pad Spacing	C2		8.40	
Contact Pad Width (X48)	X1			0.30
Contact Pad Length (X48)	Y1			1.50
Distance Between Pads	G	0.20		

Notes:

1. Dimensioning and tolerancing per ASME Y14.5M
   BSC: Basic Dimension. Theoretically exact value shown without tolerances.
2. For best soldering results, thermal vias, if used, should be filled or tented to avoid solder loss during reflow process

Microchip Technology Drawing C04-2300-Y8 Rev D

© 2025 Microchip Technology Inc. and its subsidiaries

33.1.4. 48-Pin VQFN

48-Lead Very Thin Plastic Quad Flat, No Lead Package (U5B) - 7x7 mm Body [VQFN] With 5.15 mm Exposed Pad and Stepped Wettable Flanks; Atmel Legacy ZLH

Note:	For the most current package drawings, please see the Microchip Packaging Specification located at http://www.microchip.com/packaging

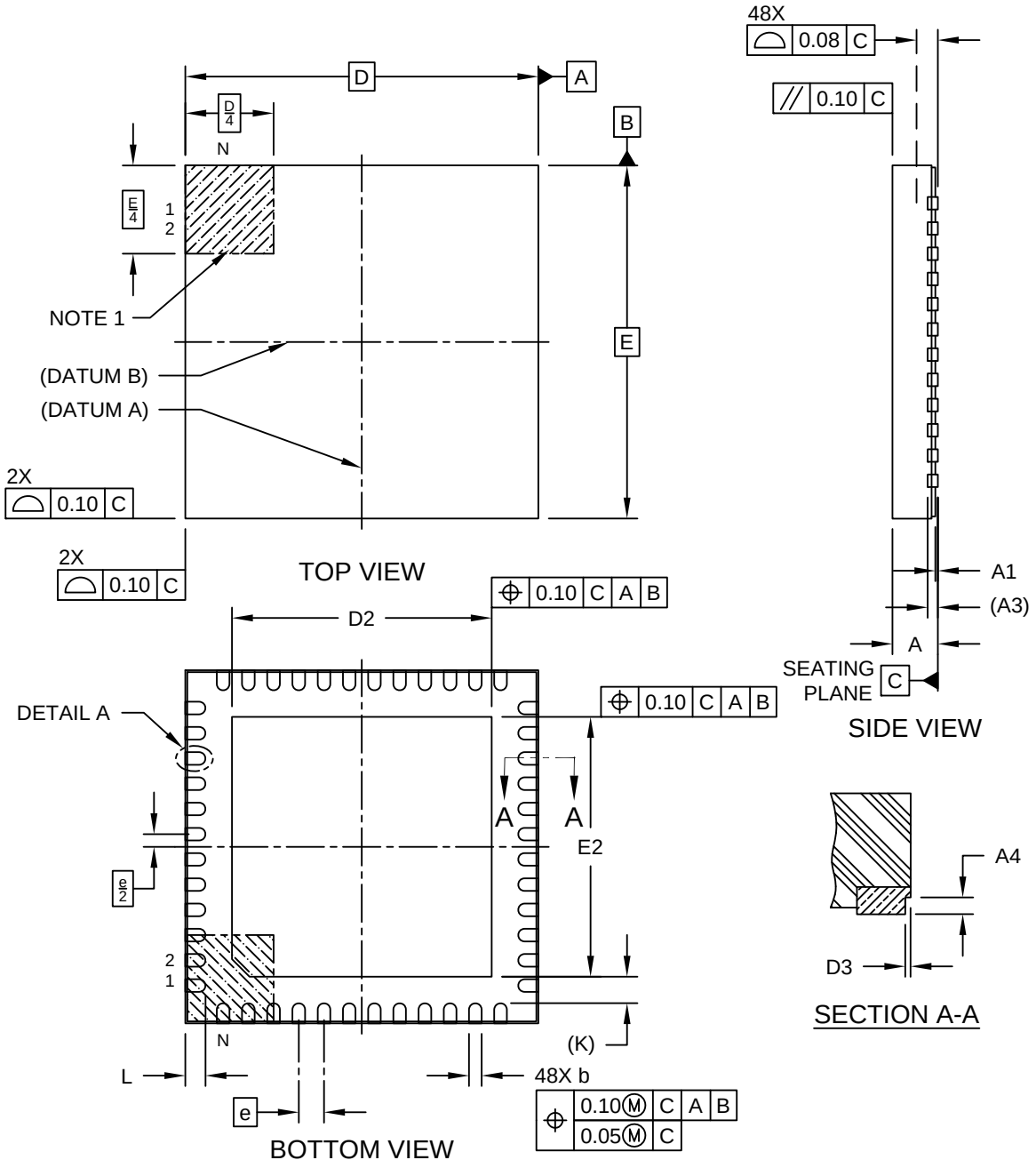

Microchip Technology Drawing C04-21493 Rev A Sheet 1 of 2

© 2025 Microchip Technology Inc. and its subsidiaries

48-Lead Very Thin Plastic Quad Flat, No Lead Package (U5B) - 7x7 mm Body [VQFN] With 5.15 mm Exposed Pad and Stepped Wettable Flanks; Atmel Legacy ZLH

Note: For the most current package drawings, please see the Microchip Packaging Specification located at http://www.microchip.com/packaging

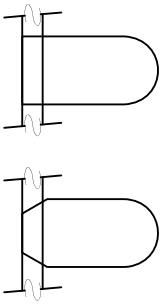

DETAIL 1
ALTERNATE TERMINAL CONFIGURATIONS

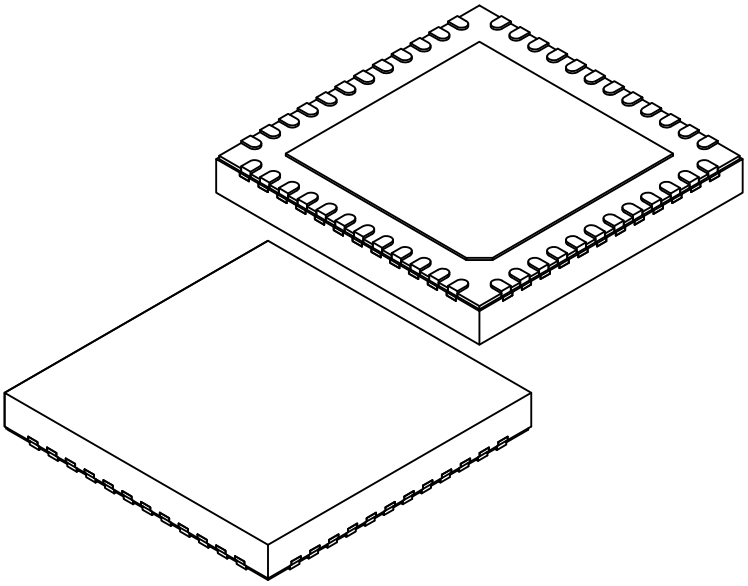

Units		MILLIMETERS		
Dimension Limits		MIN	NOM	MAX
Number of Terminals	N	48		
Pitch	e	0.50 BSC		
Overall Height	A	0,80	0.85	0.90
Standoff	A1	0.00	0.02	0.05
Terminal Thickness	A3	0.203 REF		
Overall Length	D	7.00 BSC		
Exposed Pad Length	D2	5.05	5.15	5.25
Overall Width	E	7.00 BSC		
Exposed Pad Width	E2	5.05	5.15	5.25
Terminal Width	b	0.20	0.25	0.30
Terminal Length	L	0.35	0.40	0.45
Terminal-to-Exposed-Pad	K	0.53 REF		
Wettable Flank Step Length	D3	-	-	0.085
Wettable Flank Step Height	A4	0.10	-	0.19

Notes:

1. Pin 1 visual index feature may vary, but must be located within the hatched area.
2. Package is saw singulated
3. Dimensioning and tolerancing per ASME Y14.5M
   BSC: Basic Dimension. Theoretically exact value shown without tolerances.
   REF: Reference Dimension, usually without tolerance, for information purposes only.

Microchip Technology Drawing C04-21493 Rev A Sheet 2 of 2

© 2025 Microchip Technology Inc. and its subsidiaries

48-Lead Very Thin Plastic Quad Flat, No Lead Package (U5B) - 7x7 mm Body [VQFN] With 5.15 mm Exposed Pad and Stepped Wettable Flanks; Atmel Legacy ZLH

Note: For the most current package drawings, please see the Microchip Packaging Specification located at http://www.microchip.com/packaging

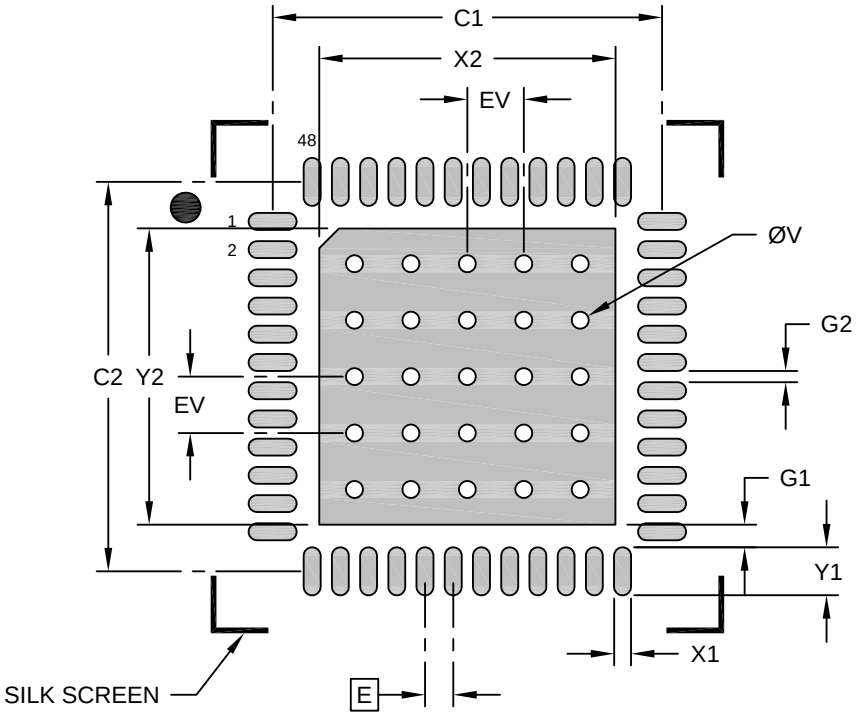

RECOMMENDED LAND PATTERN

Units		MILLIMETERS		
Dimension Limits		MIN	NOM	MAX
Contact Pitch	E		0.50 BSC	
Optional Center Pad Width	X2			5.25
Optional Center Pad Length	Y2			5.25
Contact Pad Spacing	C1		6.90	
Contact Pad Spacing	C2		6.90	
Contact Pad Width (X48)	X1			0.30
Contact Pad Length (X48)	Y1			0.85
Contact Pad to Center Pad (X48)	G1	0.20		
Contact Pad to Center Pad (X44)	G2	0.40		
Thermal Via Diameter	V		0.30	
Thermal Via Pitch	EV		1.00	

Notes:

1. Dimensioning and tolerancing per ASME Y14.5M
   BSC: Basic Dimension. Theoretically exact value shown without tolerances.
2. For best soldering results, thermal vias, if used, should be filled or tented to avoid solder loss during reflow process

Microchip Technology Drawing C04-23493 Rev A

© 2025 Microchip Technology Inc. and its subsidiaries

33.1.5. 32-Pin TQFP

32-Lead Plastic Thin Quad Flatpack (T5X) - 7x7x1.0 mm Body [TQFP]
2.00 mm Footprint; Also Atmel Legacy Global Package Code AUT

Note:	For the most current package drawings, please see the Microchip Packaging Specification located at http://www.microchip.com/packaging

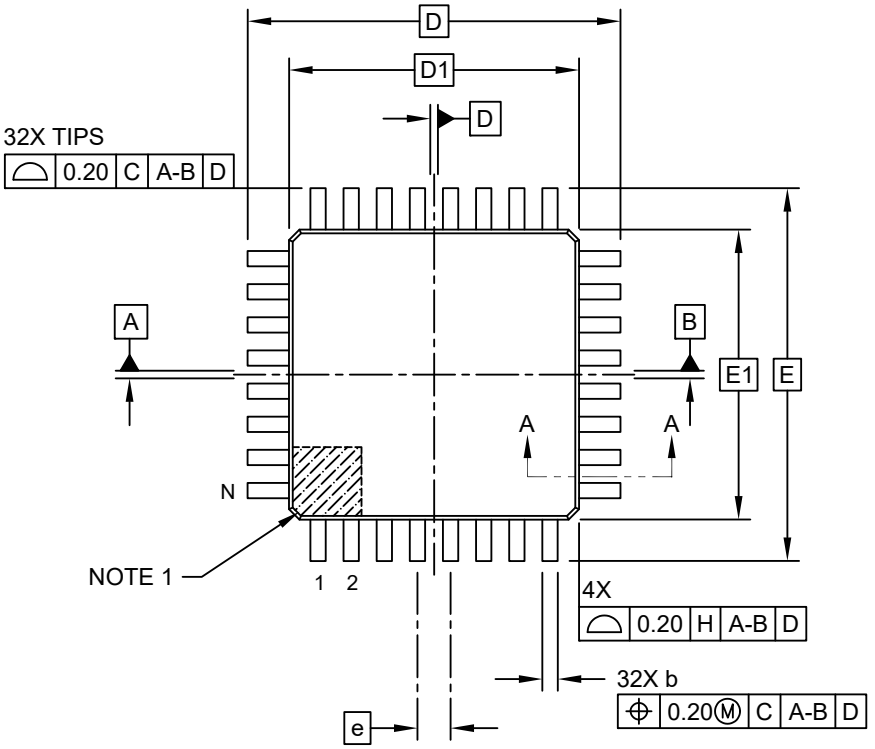

TOP VIEW

SIDE VIEW

Microchip Technology Drawing C04-074-T5X Rev D Sheet 1 of 2

© 2025 Microchip Technology Inc. and its subsidiaries

32-Lead Plastic Thin Quad Flatpack (T5X) - 7x7x1.0 mm Body [TQFP] 2.00 mm Footprint; Also Atmel Legacy Global Package Code AUT

Note: For the most current package drawings, please see the Microchip Packaging Specification located at http://www.microchip.com/packaging

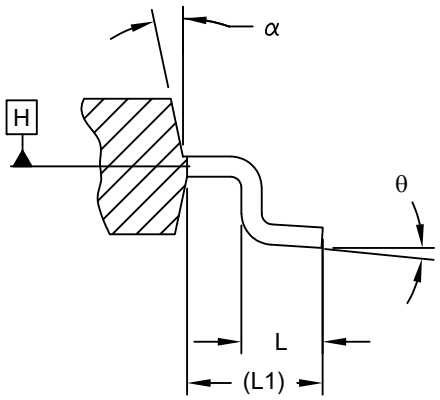

SECTION A-A

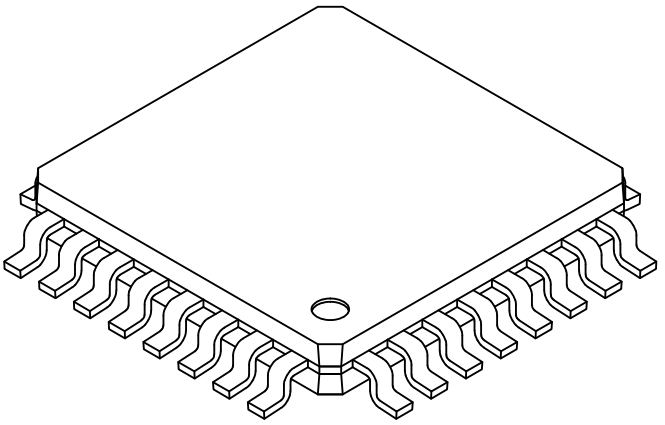

Units		MILLIMETERS		
Dimension Limits		MIN	NOM	MAX
Number of Leads	N	32		
Lead Pitch	e	0.80 BSC		
Overall Height	A	-	-	1.20
Standoff	A1	0.05	-	0.15
Molded Package Thickness	A2	0.95	1.00	1.05
Foot Length	L	0.45	0.60	0.75
Footprint	L1	1.00 REF		
Foot Angle	θ	0°	-	7°
Overall Width	E	9.00 BSC		
Overall Length	D	9.00 BSC		
Molded Package Width	E1	7.00 BSC		
Molded Package Length	D1	7.00 BSC		
Lead Width	b	0.30	0.37	0.45
Mold Draft Angle Top	α	11°	-	13°

Notes:

1. Pin 1 visual index feature may vary, but must be located within the hatched area.
2. Dimensioning and tolerancing per ASME Y14.5M
   BSC: Basic Dimension. Theoretically exact value shown without tolerances.
   REF: Reference Dimension, usually without tolerance, for information purposes only.

Microchip Technology Drawing C04-074-T5X Rev D Sheet 2 of 2

© 2025 Microchip Technology Inc. and its subsidiaries

32-Lead Plastic Thin Quad Flatpack (T5X) - 7x7x1.0 mm Body [TQFP] 2.00 mm Footprint; Also Atmel Legacy Global Package Code AUT

Note: For the most current package drawings, please see the Microchip Packaging Specification located at http://www.microchip.com/packaging

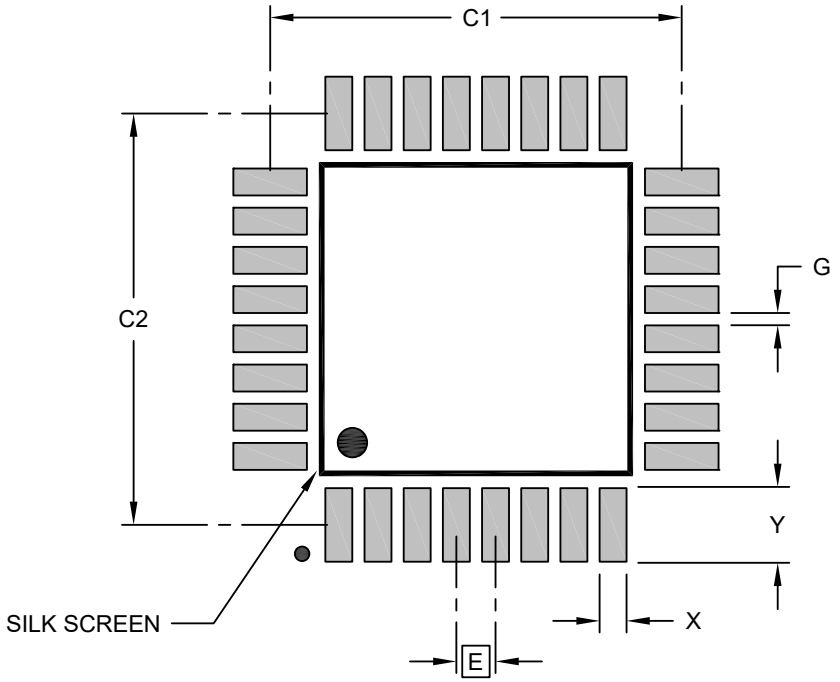

RECOMMENDED LAND PATTERN

Units		MILLIMETERS		
Dimension Limits		MIN	NOM	MAX
Contact Pitch	E	0.80 BSC		
Contact Pad Spacing	C1		8.40	
Contact Pad Spacing	C2		8.40	
Contact Pad Width (X32)	X			0.55
Contact Pad Length (X32)	Y			1.55
Contact Pad to Contact Pad (X28)	G	0.25		

Notes:

1. Dimensioning and tolerancing per ASME Y14.5M
   BSC: Basic Dimension. Theoretically exact value shown without tolerances.

Microchip Technology Drawing C04-2074-T5X Rev D

© 2025 Microchip Technology Inc. and its subsidiaries

33.1.6. 32-Pin VQFN

32-Lead Very Thin Plastic Quad Flat, No Lead Package (RTB) - 5x5 mm Body [VQFN] With 3.6x3.6 mm Exposed Pad and Stepped Wettable Flanks

Note:	For the most current package drawings, please see the Microchip Packaging Specification located at http://www.microchip.com/packaging

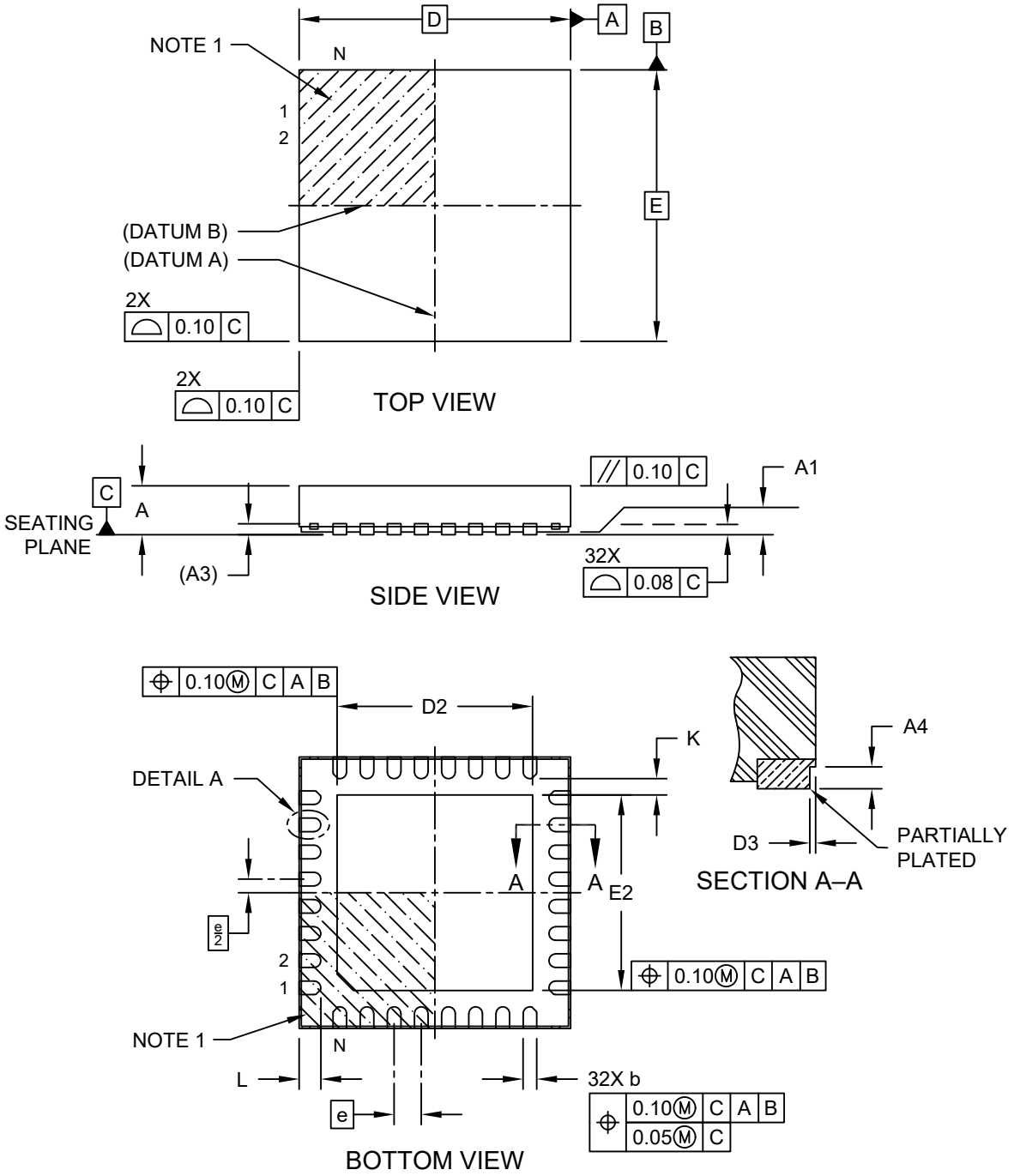

Microchip Technology Drawing C04-21391 Rev H Sheet 1 of 2

© 2025 Microchip Technology Inc. and its subsidiaries

32-Lead Very Thin Plastic Quad Flat, No Lead Package (RTB) - 5x5 mm Body [VQFN] With 3.6x3.6 mm Exposed Pad and Stepped Wettable Flanks

Note: For the most current package drawings, please see the Microchip Packaging Specification located at http://www.microchip.com/packaging

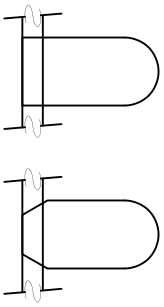

DETAIL 1
ALTERNATE TERMINAL CONFIGURATIONS

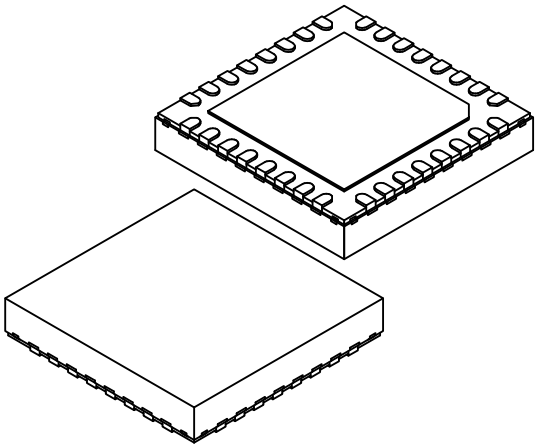

Units		MILLIMETERS		
Dimension Limits		MIN	NOM	MAX
Number of Terminals	N	32		
Pitch	e	0.50 BSC		
Overall Height	A	0.80	0.90	1.00
Standoff	A1	0.00	0.035	0.05
Terminal Thickness	A3	0.203 REF		
Overall Length	D	5.00 BSC		
Exposed Pad Length	D2	3.50	3.60	3.70
Overall Width	E	5.00 BSC		
Exposed Pad Width	E2	3.50	3.60	3.70
Terminal Width	b	0.20	0.25	0.30
Terminal Length	L	0.35	0.40	0.45
Terminal-to-Exposed-Pad	K	0.20	-	-
Wettable Flank Step Cut Width	D3	-	-	0.085
Wettable Flank Step Cut Depth	A4	0.10	-	0.19

Dimensions D3 and A4 above apply to all new products released after November 1, and all products shipped after January 1, 2019, and supersede dimensions D3 and A4 below.
No physical changes are being made to any package; this update is to align cosmetic and tolerance variations from existing suppliers.

Wettable Flank Step Length	D3	0.035	0.06	0.085
Wettable Flank Step Height	A4	0.10	-	0.19

Notes:

1. Pin 1 visual index feature may vary, but must be located within the hatched area.
2. Package is saw singulated
3. Dimensioning and tolerancing per ASME Y14.5M
   BSC: Basic Dimension. Theoretically exact value shown without tolerances.
   REF: Reference Dimension, usually without tolerance, for information purposes only.

Microchip Technology Drawing C04-21391 Rev H Sheet 2 of 2

© 2025 Microchip Technology Inc. and its subsidiaries

32-Lead Very Thin Plastic Quad Flat, No Lead Package (RTB) - 5x5 mm Body [VQFN] With 3.6x3.6 mm Exposed Pad and Stepped Wettable Flanks

Note: For the most current package drawings, please see the Microchip Packaging Specification located at http://www.microchip.com/packaging

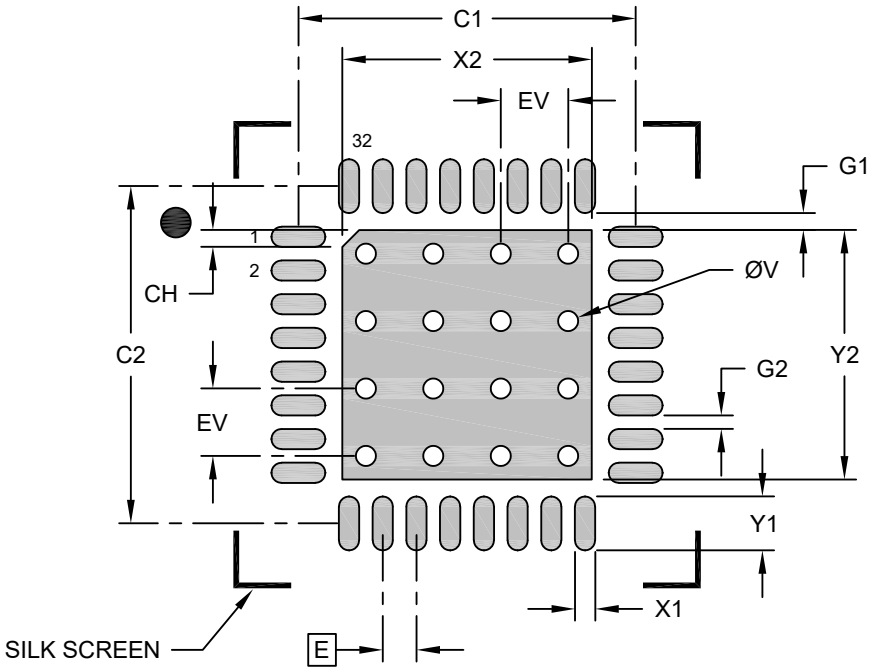

RECOMMENDED LAND PATTERN

Units		MILLIMETERS		
Dimension Limits		MIN	NOM	MAX
Contact Pitch	E		0.50 BSC	
Optional Center Pad Width	X2			3.70
Optional Center Pad Length	Y2			3.70
Exposed Pad 45° Corner Chamfer	CH		0.25	
Contact Pad Spacing	C1		5.00	
Contact Pad Spacing	C2		5.00	
Contact Pad Width (X32)	X1			0.30
Contact Pad Length (X32)	Y1			0.80
Contact Pad to Center Pad (X32)	G1	0.25		
Contact Pad to Contact Pad (X28)	G2	0.20		
Thermal Via Diameter	V		0.30	
Thermal Via Pitch	EV		1.00	

Notes:

1. Dimensioning and tolerancing per ASME Y14.5M
   BSC: Basic Dimension. Theoretically exact value shown without tolerances.
2. For best soldering results, thermal vias, if used, should be filled or tented to avoid solder loss during reflow process

Microchip Technology Drawing C04-23391 Rev H

33.2. Soldering Profile

The following table gives the recommended soldering profile from J-STD-20.

© 2025 Microchip Technology Inc. and its subsidiaries

Table 33-1. Recommended Soldering Profile

Profile Feature	Green Package
Average Ramp-up Rate (217°C to peak)	3°C/s max.
Preheat Temperature 175°C ±25°C	150-200°C
Time Maintained Above 217°C	60-150s
Time within 5°C of Actual Peak Temperature	30s
Peak Temperature Range	260°C
Ramp-down Rate	6°C/s max.
Time 25°C to Peak Temperature	8 minutes max.

A maximum of three reflow passes is allowed per component.

© 2025 Microchip Technology Inc. and its subsidiaries

34. Schematic Checklist

34.1. Introduction

This chapter describes a common checklist that should be used when starting and reviewing the schematics for a PIC32C design. This chapter illustrates a recommended power supply connection, how to connect external analog references, programmer, debugger, oscillator and crystal.

34.1.1. Operation in Noisy Environment

If the device is operating in an environment with much electromagnetic noise, it must be protected from this noise to ensure reliable operation. In addition to following best practice EMC design guidelines, the recommendations listed in the schematic checklist sections must be followed. In particular, placing decoupling capacitors very close to the power pins, an RC-filter on the $\overline{\text{RESET}}$ pin, and a pull-up resistor on the SWCLK pin is critical for reliable operations. It is also relevant to eliminate or attenuate noise in order to avoid that it reaches supply pins, I/O pins and crystals.

Important: Refer to the *EMI, EMC, EFT, and ESD Circuit Design Consideration for 32-bit Microcontrollers* guide on the Microchip web site, www.microchip.com/.

34.2. Power Supply

The PIC32C supports a single power supply from 1.62V - 3.63V.

34.2.1. Power Supply Connections

Figure 34-1. Power Supply Schematic [(1)]

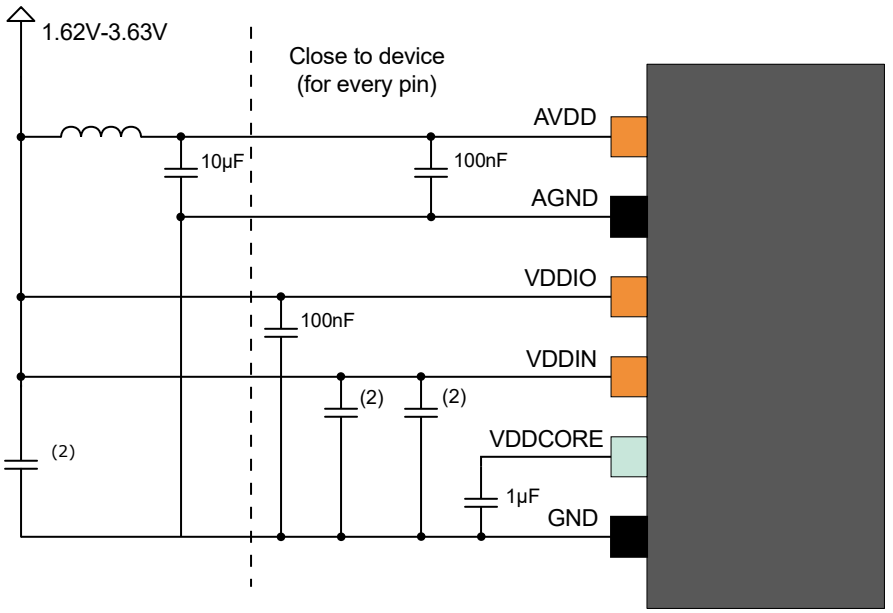

Notes:

1. AVDD and VDDIO were shorted during characterization and a Ferrite bead was not used.
2. Not all capacitors are required. Refer to electrical characteristics, Decoupling Requirements tables to know which capacitors are mandatory and their values.

© 2025 Microchip Technology Inc. and its subsidiaries

Table 34-1. Power Supply Connections, V_{DDCORE} From Internal Regulator

Signal Name	Recommended Pin Connection	Description
V_{DDIO}	1.62V - 3.63V Decoupling/filtering capacitors 100nF(1)(2) and 10µF(1) Decoupling/filtering inductor 10µH(1)(3)	Digital supply voltage
V_{DDIN}	1.62V - 3.63V Decoupling/filtering capacitors: See electrical characteristics, Decoupling Requirements tables to know which capacitors are mandatory and their values.	Core supply voltage
AVDD	1.62V - 3.63V Decoupling/filtering capacitors 100nF(1)(2) and 10µF(1) Ferrite bead(4) prevents the V_{DD} noise interfering the AVDD	Analog supply voltage
V_{DDCORE}	1.6V to 1.8V Decoupling/filtering capacitor 1µF(1)(2)	Core supply voltage / external decoupling pin
GND		Ground
AGND		Ground for the analog power domain

Notes:

1. These values are only given as typical examples.
2. Decoupling capacitor should be placed close to the device for each supply pin pair in the signal group, low ESR caps should be used for better decoupling.
3. An inductor should be added between the external power and the V_{DD} for power filtering.
4. Ferrite bead has better filtering performance than the common inductor at high frequencies. It can be added between V_{DD} and AVDD for preventing digital noise from entering the analog power domain. The bead should provide enough impedance (e.g. 50Ω at 20MHz and 220Ω at 100MHz) for separating the digital power from the analog power domain. Make sure to select a ferrite bead designed for filtering applications with a low DC resistance to avoid a large voltage drop across the ferrite bead.

© 2025 Microchip Technology Inc. and its subsidiaries

34.3. External Analog Reference Connections

The following schematic checklist is only necessary if the application is using one or more of the external analog references. If the internal references are used instead, the following circuits are not necessary.

Figure 34-2. External Analog Reference Schematic With Two References

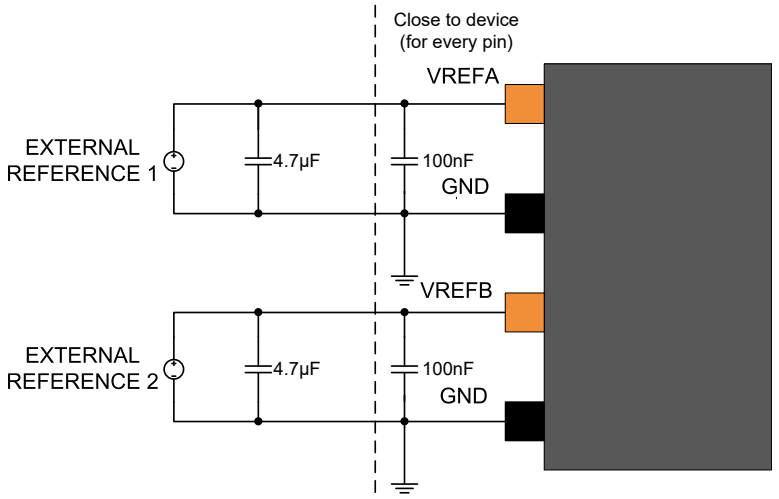

Figure 34-3. External Analog Reference Schematic With One Reference

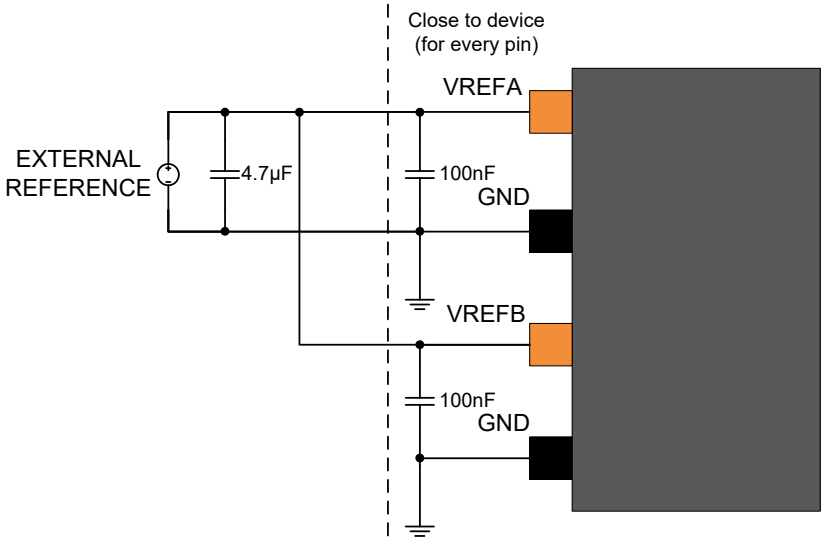

Table 34-2. External Analog Reference Connections

Signal Name	Recommended Pin Connection	Description
VREFx	1.0V to AVDD - 0.6V for ADC 1.0V to AVDD- 0.6V for DAC Decoupling/filtering capacitors 100nF(1)(2) and 4.7µF(1)	External reference from VREFx pin on the analog port
GND		Ground

1. These values are given as a typical example.

© 2025 Microchip Technology Inc. and its subsidiaries

2. Decoupling capacitor should be placed close to the device for each supply pin pair in the signal group.

34.4. External Reset Circuit

The external Reset circuit is connected to the $\overline{\text{RESET}}$ pin when the external Reset function is used. The circuit is not necessary when the $\overline{\text{RESET}}$ pin is not driven low externally by the application circuitry.

The reset switch can also be removed, if a manual reset is not desired. The $\overline{\text{RESET}}$ pin itself has an internal pull-up resistor, hence it is optional to add any external pull-up resistor.

A pull-up resistor makes sure that the reset does not go low and unintentionally cause a device reset. An additional resistor has been added in series with the switch to safely discharge the filtering capacitor, that is, preventing a current surge when shorting the filtering capacitor, which again can cause a noise spike that can have a negative effect on the system.

Figure 34-4. External Reset Circuit Schematic

Figure 34-5. External Reset Circuit Schematic (EFT Immunity Enhancement)

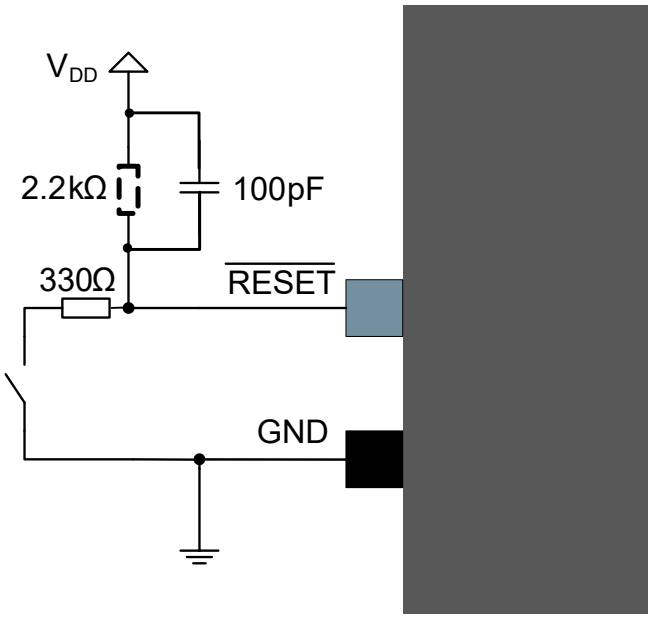

Note: This reset circuit is intended to improve EFT immunity, but does not filter low-frequency glitches, which makes it not suitable as an example for applications requiring debouncing on a reset button.

Table 34-3. Reset Circuit Connections

Signal Name	Recommended Pin Connection	Description
$\overline{\text{RESET}}$	Reset low-level threshold voltage V_{DDIO} = 1.6V - 2.0V: Below 0.33 * V_{DDIO} V_{DDIO} = 2.7V - 3.6V: Below 0.36 * V_{DDIO} Decoupling/filter capacitor 100 pF(1)Pull-up resistor 2.2 kΩ(1)(2)Resistor in series with the switch 330Ω(1)	Reset pin

1. These values are given as a typical example.
2. The PIC32C features an internal pull-up resistor on the $\overline{\text{RESET}}$ pin, therefore an external pull-up is optional.

© 2025 Microchip Technology Inc. and its subsidiaries

34.5. Clocks and Crystal Oscillators

The PIC32C can be run from internal or external clock sources, or a mix of internal and external sources. An example of usage will be to use the internal 8 MHz oscillator as source for the system clock, and an external 32.768 kHz watch crystal as clock source for the Real-Time counter (RTC).

34.5.1. External Clock Source

Figure 34-6. External Clock Source Example Schematic

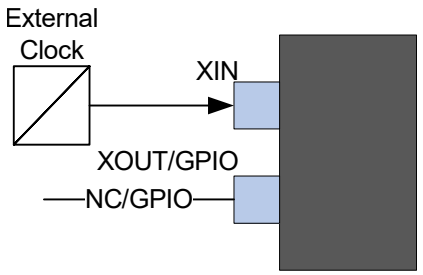

Table 34-4. External Clock Source Connections

Signal Name	Recommended Pin Connection	Description
XIN	XIN is used as input for an external clock signal	Input for inverting oscillator pin
XOUT/GPIO	Can be left unconnected or used as normal GPIO	

34.5.2. Crystal Oscillator

The following figure illustrates a typical example of the crystal oscillator schematic:

Figure 34-7. Crystal Oscillator Schematic

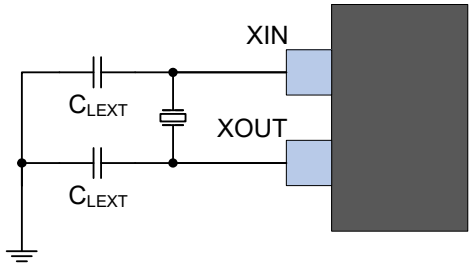

The crystal must be located as close as possible to the device. Long signal lines may cause a load too high to operate the crystal, and cause crosstalk to other parts of the system.

Table 34-5. Crystal Oscillator Checklist

Signal Name	Recommended Pin Connection	Description
XIN	Load capacitor C_{LEXT}(1)	External crystal between 0.4 to 32 MHz
XOUT	Load capacitor C_{LEXT}(1)	

1. Decoupling capacitor should be placed close to the device for each supply pin pair in the signal group.

34.5.3. External Real Time Oscillator

The low-frequency crystal oscillator is optimized for use with a 32.768 kHz watch crystal. When selecting crystals, load capacitance and crystal's Equivalent Series Resistance (ESR) must be taken into consideration. Both values are specified by the crystal vendor.

© 2025 Microchip Technology Inc. and its subsidiaries

The PIC32C oscillator is optimized for very low power consumption, hence users must pay close attention when selecting crystals. See table 31-16 for maximum ESR recommendations on 12.5 pF crystals.

The low-frequency crystal oscillator provides an internal load capacitance of typical values available in Table 31-16, *32 kHz Crystal Oscillator Characteristics*. This internal load capacitance and PCB capacitance can use a crystal inferior to 12.5 pF load capacitance without external capacitors as shown in the following figure.

Figure 34-8. External Real Time Oscillator without Load Capacitor

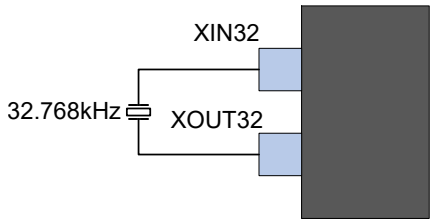

However, to improve crystal accuracy and safety factor, the data sheet recommends adding external capacitors as shown in the following figure.

To find suitable load capacitance for a 32.768 kHz crystal, refer to the crystal data sheet.

Figure 34-9. External Real Time Oscillator with Load Capacitor

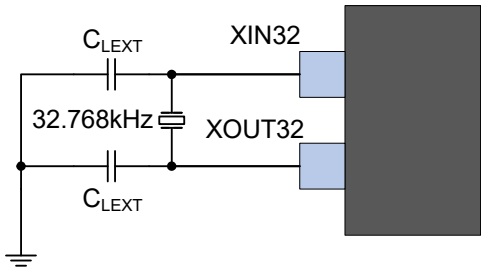

Table 34-6. External Real Time Oscillator Checklist

Signal Name	Recommended Pin Connection	Description
XIN32	Load capacitor C_{LEXT}(1)	Timer oscillator input
XOUT32	Load capacitor C_{LEXT}(1)	Timer oscillator output

1. Decoupling capacitor must be placed close to the device for each supply pin pair in the signal group.

Note:
In order to minimize the cycle-to-cycle jitter of the external oscillator, keep the neighboring pins as steady as possible. For neighboring pin details, refer to the section *Oscillator Pinout*.

34.6. Unused or Unconnected Pins

For unused pins, the default state of the pins will provide the lowest current leakage. There is no need to do any configuration of the unused pins in order to lower the power consumption.

34.7. Programming and Debugging Ports

For programming and/or debugging PIC32C, the device must be connected using the Serial Wire Debug (SWD) interface. Currently the SWD interface is supported by several Microchip and third party programmers and debuggers.

Note: A pull-up resistor on the SWCLK pin is critical for reliable operations.

© 2025 Microchip Technology Inc. and its subsidiaries

Figure 34-10. SWCLK Circuit Connections

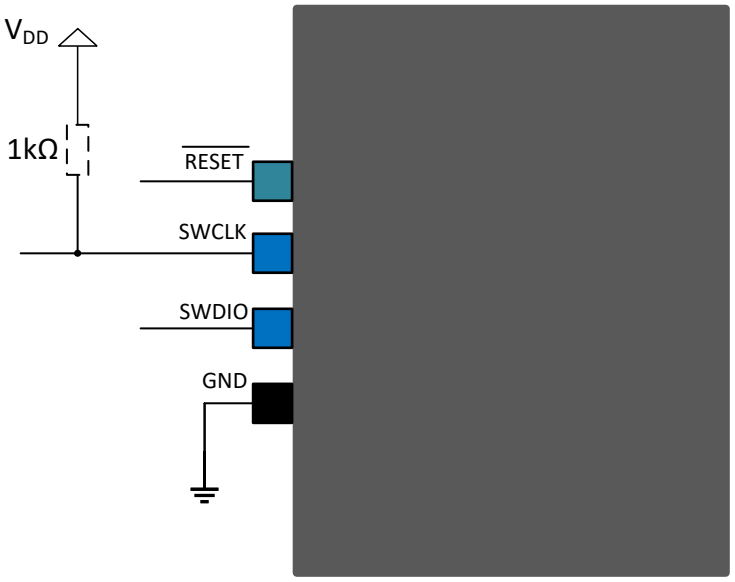

Table 34-7. SWCLK Circuit Connections

Header Signal Name	Description	Recommended Pin Connection
SWDCLK	Serial wire clock pin	Pull-up resistor 1kΩ
SWDIO	Serial wire bidirectional data pin	—
RESET	Target device reset pin, active low	—
GND	Ground	—

34.7.1. Cortex Debug Connector (10-pin)

For debuggers and/or programmers that support the Cortex Debug Connector (10-pin) interface the signals should be connected as shown in the figure below with details described in the next table.

Figure 34-11. Cortex Debug Connector (10-pin)

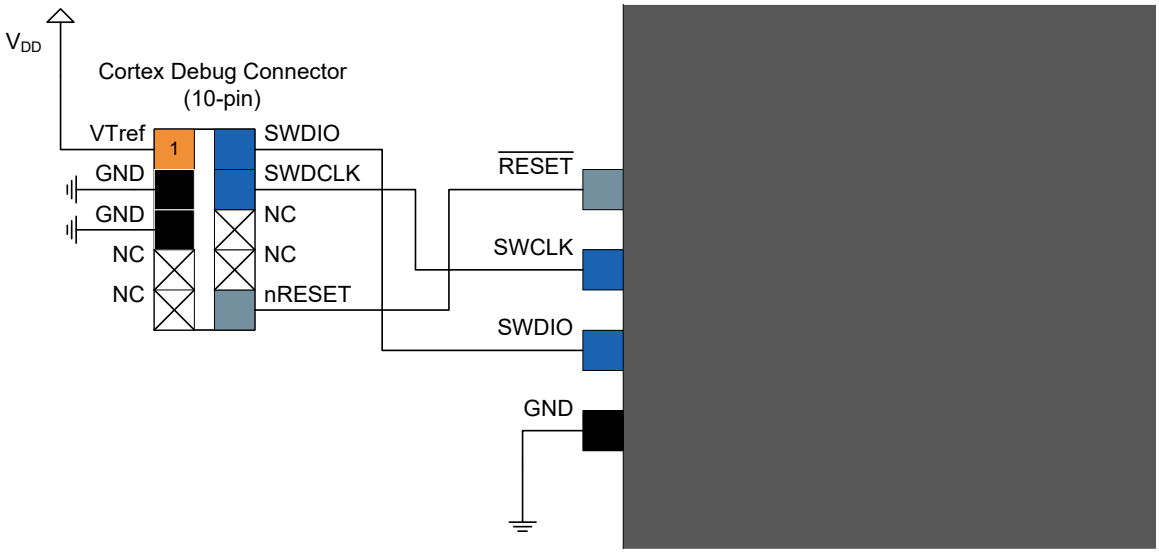

© 2025 Microchip Technology Inc. and its subsidiaries

Table 34-8. Cortex Debug Connector (10-pin)

Header Signal Name	Description	Recommended Pin Connection
SWDCLK	Serial wire clock pin	Pull-up resistor 1kΩ
SWDIO	Serial wire bidirectional data pin	
$\overline{\text{RESET}}$	Target device Reset pin, active-low Refer to External Reset Circuit.	
VTref	Target voltage sense, should be connected to the device V_{DD}	
GND	Ground	

34.7.2. 10-pin JTAGICE3 Compatible Serial Wire Debug Interface

The JTAGICE3 debugger and programmer does not support the Cortex Debug Connector (10-pin) directly, hence a special pinout is needed to directly connect the PIC32C to the JTAGICE3, alternatively one can use the JTAGICE3 squid cable and manually match the signals between the JTAGICE3 and PIC32C. The following figure describes how to connect a 10-pin header that support connecting the JTAGICE3 directly to the PIC32C without the need for a squid cable.

To connect the JTAGICE3 programmer and debugger to the PIC32C, one can either use the JTAGICE3 squid cable, or use a 10-pin connector as shown in the figure below with details given in the next table to connect to the target using the JTAGICE3 50 mil cable directly.

Figure 34-12. 10-pin JTAGICE3 Compatible Serial Wire Debug Interface

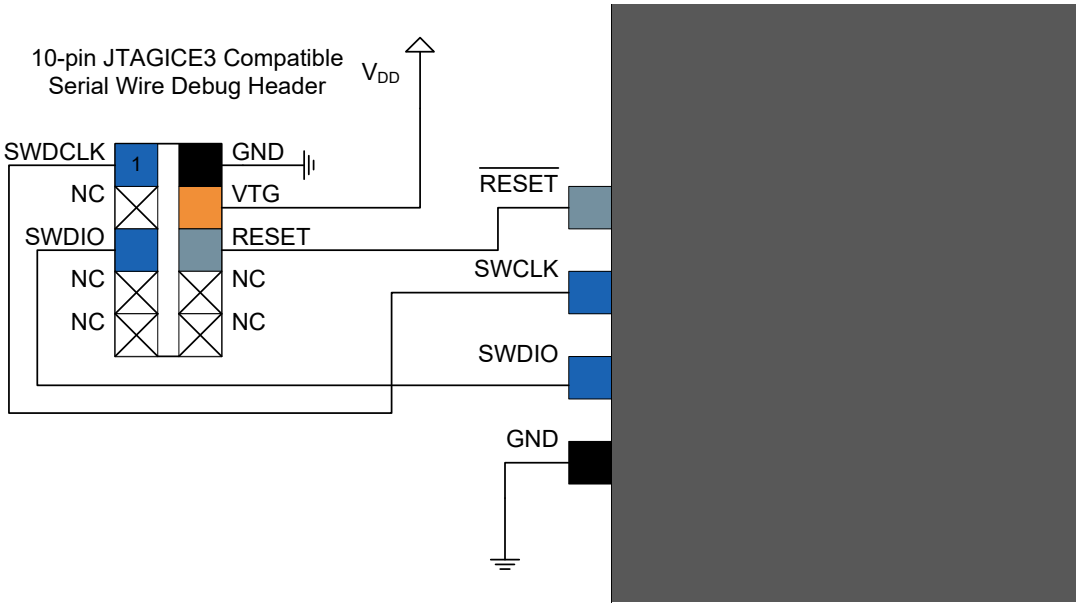

Table 34-9. 10-pin JTAGICE3 Compatible Serial Wire Debug Interface

Header Signal Name	Description
SWDCLK	Serial wire clock pin
SWDIO	Serial wire bidirectional data pin
$\overline{\text{RESET}}$	Target device Reset pin, active-low
VTG	Target voltage sense, should be connected to the device V_{DD}
GND	Ground

34.7.3. 20-pin IDC JTAG Connector

For debuggers and/or programmers that support the 20-pin IDC JTAG Connector, e.g. the SAM-ICE, the signals should be connected as shown in the next figure with details described in the table.

© 2025 Microchip Technology Inc. and its subsidiaries

Figure 34-13. 20-pin IDC JTAG Connector

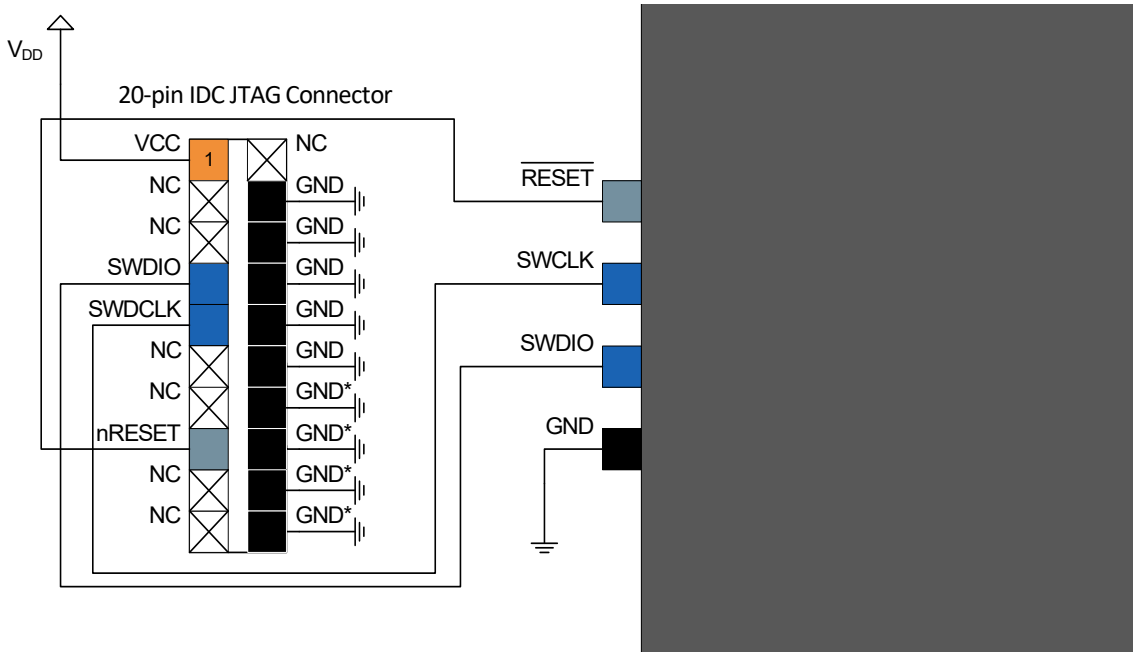

Table 34-10. 20-pin IDC JTAG Connector

Header Signal Name	Description
SWDCLK	Serial wire clock pin
SWDIO	Serial wire bidirectional data pin
$\overline{\text{RESET}}$	Target device Reset pin, active-low
VCC	Target voltage sense, should be connected to the device V_{DD}
GND	Ground
GND*	These pins are reserved for firmware extension purposes. They can be left open or connected to GND in normal debug environment. They are not essential for SWD in general.

© 2025 Microchip Technology Inc. and its subsidiaries

35. Revision History

Revision B - 04/2025

The following updates were performed for this revision:

Section	Description
Pinout and Packaging	• Added a new SYSCTRL column to the following Pinout tables: – 64-pin VQFN/64-pin TQFP Pinout and Multiplexing – 48-pin VQFN/48-pin TQFP Pinout and Multiplexing – 32-pin VQFN/32-pin TQFP Pinout and Multiplexing • Added a new section named *Other Functions*
Electrical Specifications 85°C	• Updates all Instances of BODVDD to BOD33 • All Instances of TWIHS updated to I^2C • Added a note to REG_43 and updated Symbol naming for REG_47, REG_51, and REG_52 in the *Power Supply* table • Removed an erroneous temperature reference in the note for *Wake-Up Power* • Updated *I/O Specifications* with all new content • Removed erroneous data from the *Internal Voltage Reference Specifications* table • Removed FCLK_63 from the *Maximum Clock Frequencies* table • Removed an erroneous note from the *OSC8M Electrical Specifications* • Updated the Symbol naming in the *OSCULP32K Electrical Specifications* table • All new content added to the *Analog-to-Digital Controller (ADC) Specifications* • All new content added to *Serial Peripheral Interface (SPI) Mode Electrical Specifications*
Electrical Specifications 125°C	• All new section
Schematic Checklist	• Updated *External Real Time Oscillator* to remove an obsolete table and data

Revision A - 02/2025

This is the initial release of the document.

© 2025 Microchip Technology Inc. and its subsidiaries

36. Conventions

36.1. Numerical Notation

Table 36-1. Numerical Notation

Symbol	Description
165	Decimal number
`0b0101`	Binary number
‘`0101`’	Binary numbers are given without prefix if unambiguous
0x3B24	Hexadecimal number
X	Represents an unknown or do not care value
Z	Represents a high-impedance (floating) state for either a signal or a bus

36.2. Memory Size and Type

Table 36-2. Memory Size and Bit Rate

Symbol	Description
KB (kbyte)	kilobyte (2^{10} = 1024)
MB (Mbyte)	megabyte (2^{20} = 1024*1024)
GB (Gbyte)	gigabyte (2^{30} = 1024*1024*1024)
b	bit (binary '0' or '1')
B	byte (8 bits)
1kbit/s	1,000 bit/s rate (not 1,024 bit/s)
1Mbit/s	1,000,000 bit/s rate
1Gbit/s	1,000,000,000 bit/s rate
word	32 bit
half-word	16 bit

36.3. Frequency and Time

Table 36-3. Frequency and Time

Symbol	Description
kHz	1 kHz = 10^3 Hz = 1,000 Hz
MHz	1 MHz = 10^6 Hz = 1,000,000 Hz
GHz	1 GHz = 10^9 Hz = 1,000,000,000 Hz
ms	1 ms = 10^{-3}s = 0.001s
µs	1 µs = 10^{-6}s = 0.000001s
ns	1 ns = 10^{-9}s = 0.000000001s

36.4. Registers and Bits

Table 36-4. Register and Bit Mnemonics

Symbol	Description
R/W	Read/Write accessible register bit. The user can read from and write to this bit.
R	Read-only accessible register bit. The user can only read this bit. Writes will be ignored.
W	Write-only accessible register bit. The user can only write this bit. Reading this bit will return an undefined value.
BIT	Bit names are shown in uppercase. (Example ENABLE)

© 2025 Microchip Technology Inc. and its subsidiaries

Table 36-4. Register and Bit Mnemonics (continued)

Symbol	Description
FIELD[n:m]	A set of bits from bit n down to m. (Example: PINA[3:0] = {PINA3, PINA2, PINA1, PINA0}
Reserved	Reserved bits are unused and reserved for future use. For compatibility with future devices, always write reserved bits to zero when the register is written. Reserved bits will always return zero when read. Reserved bit field values must not be written to a bit field. A reserved value will not be read from a read-only bit field. Do not write any value to reserved bits of a fuse.
PERIPHERAL*i*	If several instances of a peripheral exist, the peripheral name is followed by a number to indicate the number of the instance in the range 0-n. PERIPHERAL0 denotes one specific instance.
Reset	Value of a register after a Power-on Reset. This is also the value of registers in a peripheral after performing a software Reset of the peripheral, except for the Debug Control registers.
SET/CLR	Registers with SET/CLR suffix allows the user to clear and set bits in a register without doing a read-modify-write operation. These registers always come in pairs. Writing a ‘1’ to a bit in the CLR register will clear the corresponding bit in both registers, while writing a ‘1’ to a bit in the SET register will set the corresponding bit in both registers. Both registers will return the same value when read. If both registers are written simultaneously, the write to the CLR register will take precedence.

© 2025 Microchip Technology Inc. and its subsidiaries

37. Acronyms and Abbreviations

The below table contains acronyms and abbreviations used in this document.

Table 37-1. Acronyms and Abbreviations

Abbreviation	Description
AC	Analog Comparator
ADC	Analog-to-Digital Converter
ADDR	Address
AES	Advanced Encryption Standard
AHB	Advanced High-performance Bus
AMBA	Advanced Microcontroller Bus Architecture
APB	AMBA Advanced Peripheral Bus
AREF	Analog Reference Voltage
BOD	Brown-out Detector
CAL	Calibration
CC	Compare/Capture
CCL	Configurable Custom Logic
CLK	Clock
CRC	Cyclic Redundancy Check
CTRL	Control
DAC	Digital-to-Analog Converter
DAP	Debug Access Port
DFLL	Digital Frequency Locked Loop
DPLL	Digital Phase Locked Loop
DSU	Device Service Unit
EEPROM	Electrically Erasable Programmable Read-Only Memory
EIC	External Interrupt Controller
EVSYS	Event System
FDPLL	Fractional Digital Phase Locked Loop, also DPLL
GCLK	Generic Clock Controller
GND	Ground
GPIO	General Purpose Input/Output
I^2C	Inter-Integrated Circuit
IF	Interrupt Flag
INT	Interrupt
MBIST	Memory Built-In Self-Test
MEM-AP	Memory Access Port
MTB	Micro Trace Buffer
NMI	Non-maskable Interrupt
NVIC	Nested Vector Interrupt Controller
NVM	Nonvolatile Memory
NVMCTRL	Nonvolatile Memory Controller
OSC	Oscillator
PAC	Peripheral Access Controller
PC	Program Counter
PER	Period

© 2025 Microchip Technology Inc. and its subsidiaries

Table 37-1. Acronyms and Abbreviations (continued)

Abbreviation	Description
PM	Power Manager
POR	Power-on Reset
PORT	I/O Pin Controller
PTC	Peripheral Touch Controller
PWM	Pulse-Width Modulation
RAM	Random-Access Memory
REF	Reference
RTC	Real-Time Counter
RX	Receiver/Receive
SEEP	SmartEEPROM Page
SERCOM	Serial Communication Interface
SMBus	System Management Bus
SP	Stack Pointer
SPI	Serial Peripheral Interface
SRAM	Static Random Access Memory
SUPC	Supply Controller
SWD	Serial Wire Debug
TC	Timer/Counter
TRNG	True Random Number Generator
TX	Transmitter/Transmit
ULP	Ultra Low-Power
USART	Universal Synchronous and Asynchronous Serial Receiver and Transmitter
V_{DD}	Common voltage to be applied to VDDIO and AVDD
V_{DDIO}	Digital Supply Voltage
AVDD	Analog Supply Voltage
VREF	Voltage Reference
WDT	Watchdog Timer
XOSC	Crystal Oscillator

© 2025 Microchip Technology Inc. and its subsidiaries

38. Product Identification System

To order or obtain information, e.g., on pricing or delivery, refer to the factory or the listed sales office.

PART NO. [X](1) –X /XX

Device | Tape and Reel | Temperature Range | Package

Device:	Device A, Feature A, (Package A) Device B, Feature B, (Package B)	
Tape & Reel Option:	Blank	= Tube
	T	= Tape & Reel
Temperature Range:	I	= -40°C to +85°C (Industrial)
	E	= -40°C to +125°C (Extended)
Package:	AA	= Package AA
	BB	= Package BB

Examples:

- MCPXXXXXAT-E/AA: Tape and Reel, Extended temperature, XAA package
- MCPXXXXXBT-E/BB: Tape and Reel Extended temperature, XBB package

Notes:

1. Tape and Reel identifier only appears in the catalog part number description. This identifier is used for ordering purposes and is not printed on the device package. Check with your Microchip Sales Office for package availability with the Tape and Reel option.
2. Small form-factor packaging options may be available. Please check www.microchip.com/packaging for small-form factor package availability, or contact your local Sales Office.

© 2025 Microchip Technology Inc. and its subsidiaries

Microchip Information

Trademarks

The "Microchip" name and logo, the "M" logo, and other names, logos, and brands are registered and unregistered trademarks of Microchip Technology Incorporated or its affiliates and/or subsidiaries in the United States and/or other countries ("Microchip Trademarks"). Information regarding Microchip Trademarks can be found at https://www.microchip.com/en-us/about/legal-information/microchip-trademarks.

ISBN: 979-8-3371-1121-6

Legal Notice

This publication and the information herein may be used only with Microchip products, including to design, test, and integrate Microchip products with your application. Use of this information in any other manner violates these terms. Information regarding device applications is provided only for your convenience and may be superseded by updates. It is your responsibility to ensure that your application meets with your specifications. Contact your local Microchip sales office for additional support or, obtain additional support at www.microchip.com/en-us/support/design-help/client-support-services.

THIS INFORMATION IS PROVIDED BY MICROCHIP "AS IS". MICROCHIP MAKES NO REPRESENTATIONS OR WARRANTIES OF ANY KIND WHETHER EXPRESS OR IMPLIED, WRITTEN OR ORAL, STATUTORY OR OTHERWISE, RELATED TO THE INFORMATION INCLUDING BUT NOT LIMITED TO ANY IMPLIED WARRANTIES OF NON-INFRINGEMENT, MERCHANTABILITY, AND FITNESS FOR A PARTICULAR PURPOSE, OR WARRANTIES RELATED TO ITS CONDITION, QUALITY, OR PERFORMANCE.

IN NO EVENT WILL MICROCHIP BE LIABLE FOR ANY INDIRECT, SPECIAL, PUNITIVE, INCIDENTAL, OR CONSEQUENTIAL LOSS, DAMAGE, COST, OR EXPENSE OF ANY KIND WHATSOEVER RELATED TO THE INFORMATION OR ITS USE, HOWEVER CAUSED, EVEN IF MICROCHIP HAS BEEN ADVISED OF THE POSSIBILITY OR THE DAMAGES ARE FORESEEABLE. TO THE FULLEST EXTENT ALLOWED BY LAW, MICROCHIP'S TOTAL LIABILITY ON ALL CLAIMS IN ANY WAY RELATED TO THE INFORMATION OR ITS USE WILL NOT EXCEED THE AMOUNT OF FEES, IF ANY, THAT YOU HAVE PAID DIRECTLY TO MICROCHIP FOR THE INFORMATION.

Use of Microchip devices in life support and/or safety applications is entirely at the buyer's risk, and the buyer agrees to defend, indemnify and hold harmless Microchip from any and all damages, claims, suits, or expenses resulting from such use. No licenses are conveyed, implicitly or otherwise, under any Microchip intellectual property rights unless otherwise stated.

Microchip Devices Code Protection Feature

Note the following details of the code protection feature on Microchip products:

- Microchip products meet the specifications contained in their particular Microchip Data Sheet.
- Microchip believes that its family of products is secure when used in the intended manner, within operating specifications, and under normal conditions.
- Microchip values and aggressively protects its intellectual property rights. Attempts to breach the code protection features of Microchip products are strictly prohibited and may violate the Digital Millennium Copyright Act.
- Neither Microchip nor any other semiconductor manufacturer can guarantee the security of its code. Code protection does not mean that we are guaranteeing the product is "unbreakable". Code protection is constantly evolving. Microchip is committed to continuously improving the code protection features of our products.

© 2025 Microchip Technology Inc. and its subsidiaries

Product Page Links

PIC32CM1602GV00032, PIC32CM1602GV00048, PIC32CM1602GV00064, PIC32CM3204GV00032, PIC32CM3204GV00048, PIC32CM3204GV00064

© 2025 Microchip Technology Inc. and its subsidiaries