Incremental hollow shaft encoders, ø40 mm

BHK 16.24K100-B6-5

No drawing available !

Technical Data	
shaft type	hollow shaft
specific shaft type	through shaft
diameter housing	40 mm
flange	-
mounting length	32,5 mm
diameter shaft	6 mm
mech. revolutions	< 12000 rev/min
max. electrical rpm	< 12000 rev/min
voltage supply	10 - 30 VDC
measuring steps	400
output signals	push-pull
pulse range	100
pulse tolerance	15 %
switching frequency fmax.	50 kHz
short circuit protection	yes
housing-/flange material	plastic / aluminum
connection	cable radial
protection class shaft	IP 42
protection class housing	IP 42
temperature range	-20 ... +85 °C
sensing principle	optical
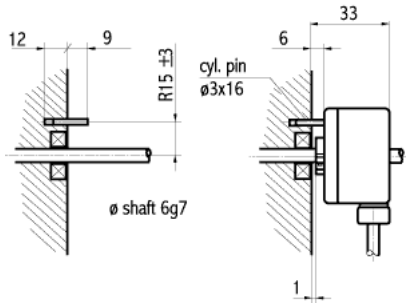
mounting drawings