Your Expert Partner for **Human Machine Interfaces**

Actuator

Distribution by
Rs-online

92-
358.200



https://rs-online.eao.com/component/92-358.20...

Your product:



92-358.200
Actuator

FRONT

Front dimension:	18,4 mm x 18,4 mm
Front form:	Square
Front bezel colour:	White
Front bezel material:	Plastic

MOUNTING

Design:	PCB
Mounting type:	Panel mounting

OPERATING-/INDICATION PART

Lens colour:	Red
Lens material:	Plastic
Lens illumination:	Illuminated
Lens shape:	Flush
Lens optics:	transparent
Illumination colour:	Red

ELECTRICAL CHARACTERISTICS

Switching voltage and switching current:	Switching voltage	min. 50 m VAC/DC max. 42 VAC/DC
	Switching current	min. 10 µA AC/DC max. 100 mA AC/DC
	Power rating	max. 2 W
Switching rating:	42 V	
Electrical lifetime:		

500 000 cycles of operation at 42VDC, 50mA, according to IEC 6512-5-9c

Electric strength:	500 VAC, 50 Hz, 1 minute according to IEC 60512-5-9c
Electrostatic discharge (ESD):	15 kV

MECHANICAL CHARACTERISTICS

Switching action:	Momentary
Switching system:	Short-travel element
Switching system:	Short-travel switching system with 2 independent contact points Guarantees reliable switching even of very light loads. Fitted with 1 normally open contact.
Mechanical lifetime:	≥1 Mil. cycles of operation
Operating force:	2.7 N ±1 N switching element, 5 N lens
Operating Travel:	ca. 0.4 mm switching element
Tightening torque:	Fixing nut max. 0.5 Nm, Fixing screw mounting flange 0.4 Nm
Weight:	0.017 kg

AMBIENT CONDITION

IP front protection:	IP40
IP Protection:	IP40 front side
Operating temperature:	– 25 °C ... + 70 °C
Storage temperature:	– 40 °C ... + 80 °C
Shock resistance:	Max. 500 m/s^2, pulse width, 3-axis (sinusoidal EN IEC 60068-2-27)
Vibration resistance:	Max. 100 m / s^2 from 10 Hz ... 500 Hz, 10 cycles, 3-axis (sinusoidal EN IEC 60068-2-6)

CERTIFICATE

Approbations:	CQC
Conformities:	CE, UKCA, 2011 / 65 / EC (RoHS), 2014 / 35 / EU (LVD)
REACH:	REACH compliant
RoHS:	RoHS compliant

OTHER

Short Description:	Actuator, 18,4 mm x 18,4 mm, Flush, Illuminated, Red, Plastic, transparent, Square, White, Plastic, Momentary, IP40, Red

Dimension: 18.4 mm x 18.4 mm

Housing colour: White

Housing material: Plastic

Wiring diagrams:

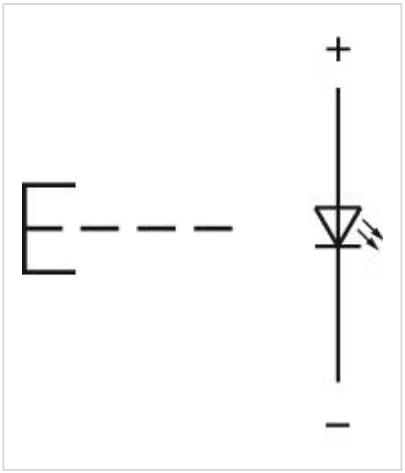

Mounting cut-outs:

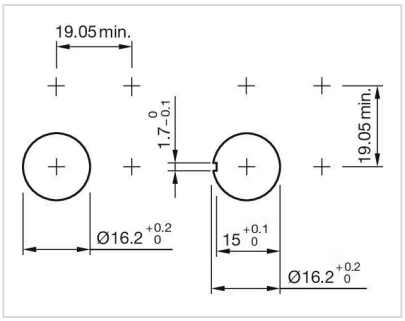

Dimension drawings:

