Spare parts catalog for repairs

187868 HGPP-12-A-G1 Parallel gripper - Series: All

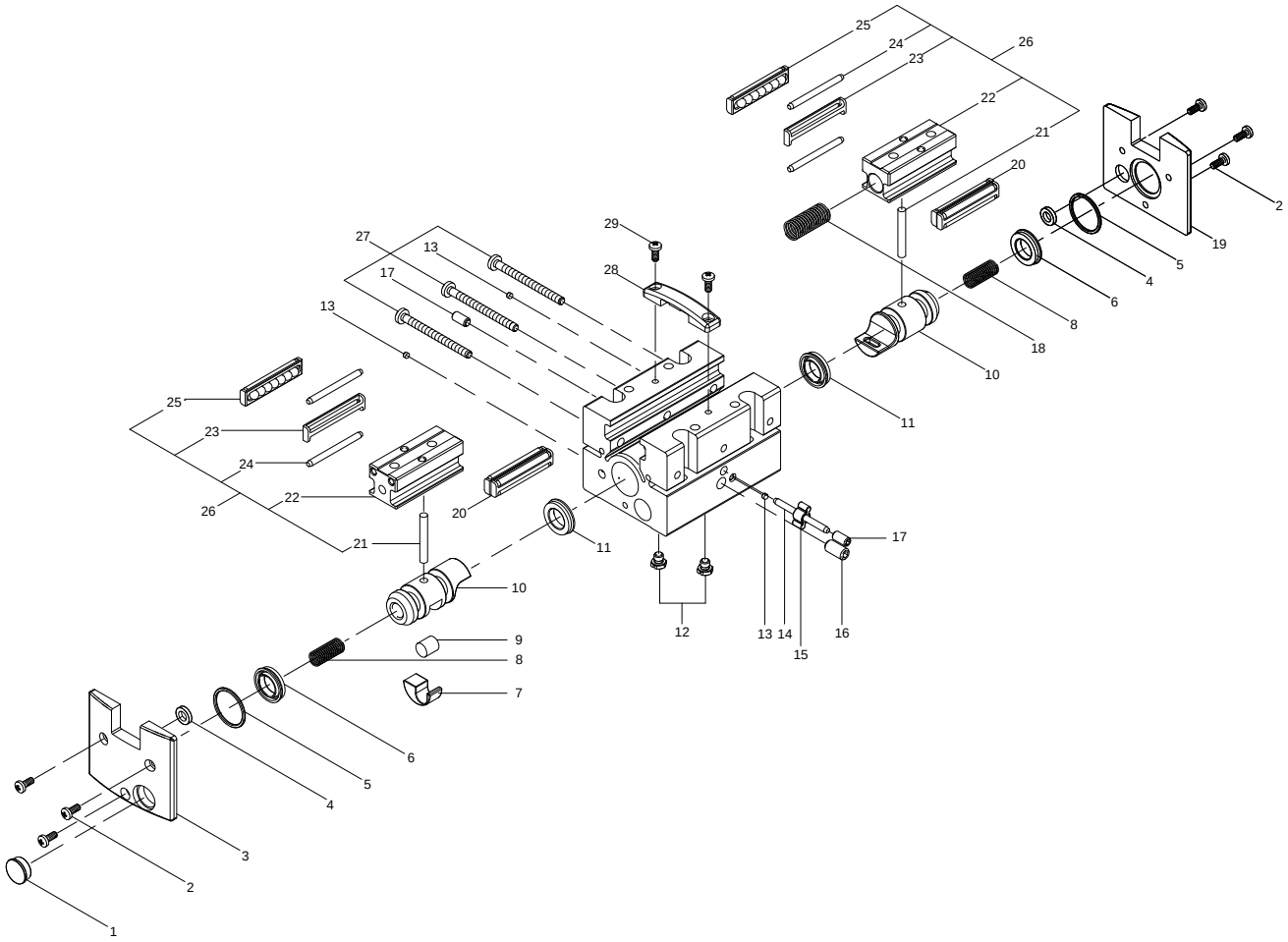

187868 HGPP-12-A-G1 Parallel gripper - Series: All

Pos.	Part no.	Type	Note	Qty.	Unit
A	673173	HGPP-12 Set of wearing parts	Spare parts: 4, 5, 6, 8, 11, 18 Replacing the wearing parts	1	PC
1			Not available	1	PC
2			Not available	6	PC
3			Not available	1	PC
4			Not available separately, see position A	2	PC
5			Not available separately, see position A	5	PC
6			Not available separately, see position A	2	PC
7			Not available	1	PC
8			Not available separately, see position A	2	PC
9			Not available	1	PC
10			Not available	2	PC
11			Not available separately, see position A	2	PC
12			Not available	2	PC
13			Not available	3	PC
14			Not available	1	PC
15			Not available	1	PC
16			Not available	1	PC
17			Not available	2	PC
18			Not available separately, see position A	1	PC
19			Not available	1	PC
20			Not available	4	PC
21			Not available separately, see position 26	2	PC
22			Not available separately, see position 26	2	PC
23			Not available separately, see position 26	16	PC
24			Not available separately, see position 26	8	PC
25			Not available separately, see position 26	8	PC
26	673167	HGPP-12 Gripper jaw		2	PC
27			Not available	3	PC
28			Not available	1	PC
29			Not available	2	PC