THIS DRAWING IS UNPUBLISHED. RELEASED FOR PUBLICATION MAY ,1977.
© COPYRIGHT 1977 By – ALL RIGHTS RESERVED.

LOC	DIST
J	—

REVISIONS
変更

P	LTR	DESCRIPTION	DATE	DWN	APVD
	R1	REVISED PER ECO-11-005030	11MAR11	RK	HMR

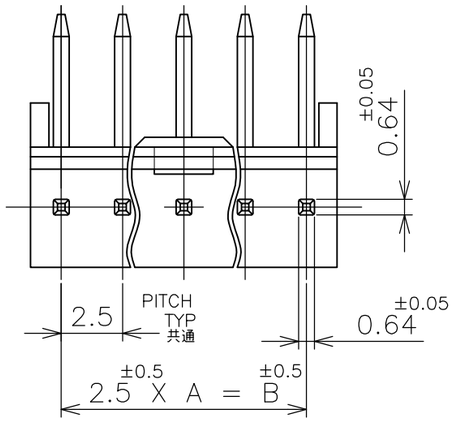

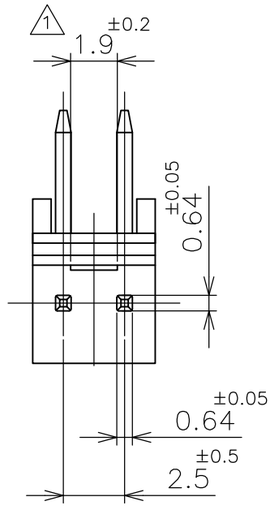

1 LOCKING HOLE IS PLACED ON THE CENTER OF POST HEADER.

1 ロッキング凹部位置は長手方向の中央。

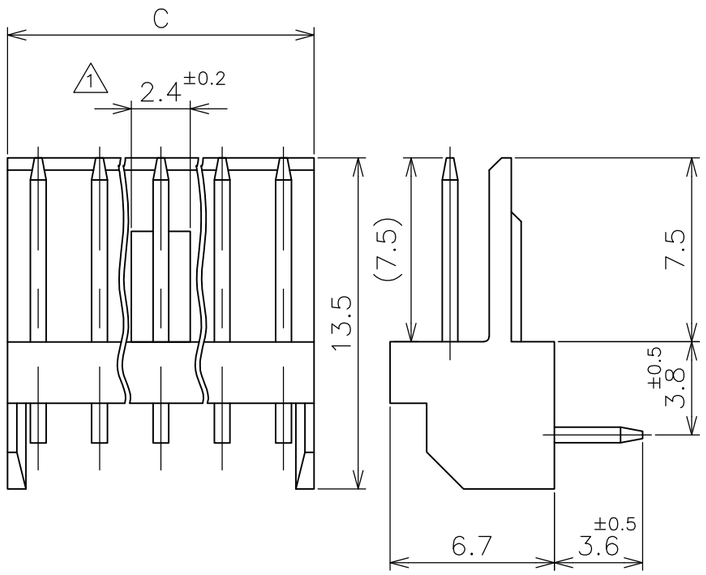

3~12 POS
極

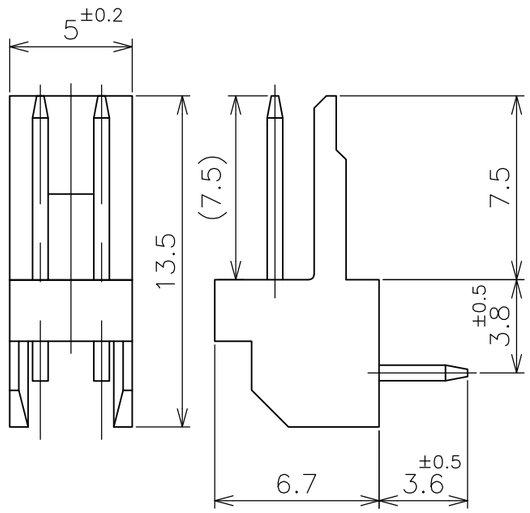

2 POS
極

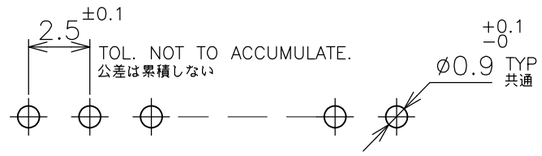

RECOMMENDED BOARD LAYOUT (1.6 THK)
取付基板穴寸法(基板厚1.6t)

30.0	27.5	11	12	9-171826-2		7-171826-2		5-171826-2		3-171826-2		1-171826-2	
25.0	22.5	9	10	9-	-0	7-	-0	5-	-0	3-	-0	1-	-0
22.5	20.0	8	9	8-	-9	6-	-9	4-	-9	2-	-9		-9
20.0	17.5	7	8	8-	-8	6-	-8	4-	-8	2-	-8		-8
17.5	15.0	6	7	8-	-7	6-	-7	4-	-7	2-	-7		-7
15.0	12.5	5	6	8-	-6	6-	-6	4-	-6	2-	-6		-6
12.5	10.0	4	5	8-	-5	6-	-5	4-	-5	2-	-5		-5
10.0	7.5	3	4	8-	-4	6-	-4	4-	-4	2-	-4		-4
7.5	5.0	2	3	8-	-3	6-	-3	4-	-3	2-	-3		-3
図示		—//—	2	8-171826-2		6-171826-2		4-171826-2		2-171826-2		171826-2	
±0.2 C	±0.5 B	A	NO OF POS 極数	RED 赤色		GREEN 緑色		BLUE 青色		BLACK 黒色		NATURAL 自然色	
				PART NUMBER 型番									

THIS DRAWING IS A CONTROLLED DOCUMENT.

DIMENSIONS: 単位: 粍 mm

TOLERANCES UNLESS OTHERWISE SPECIFIED: 一般公差

0 PLC	± 0.3
1 PLC	± 0.3
2 PLC	± 0.3
3 PLC	± 0.3
4 PLC	± 0.3
ANGLES	±

MATERIAL 材料: HSG : 66NYLON UL94V-0
POST: BRASS

FINISH 仕上: POST: TIN-PLATE

DWN	T.DOI	14MAY77
CHK	H.TAGUCHI	14MAY77
APVD	H.TAGUCHI	14MAY77
PRODUCT SPEC 製品規格		
APPLICATION SPEC 取付適用規格		
WEIGHT		

TE Connectivity

NAME 名称: POST HEADER ASSY (HORIZONTAL) AMP EI SERIES CONNECTOR

SIZE	CAGE CODE	DRAWING NO 番号	RESTRICTED TO
A3	00779	C-171826	—

CUSTOMER DRAWING

SCALE 尺度	SHEET	REV
4:1	1 OF 1	R1