3 Port Solenoid Valve
Series VQ100

Unprecedented high speed, stable response, and extra-long service life.

ON: 3.5ms, OFF: 2ms, Dispension accuracy ±1ms
(With indicator light and surge voltage suppressor; supply pressure 0.5MPa)
200million cycles or more (clean and dry air)
(Factors determined in a life test by SMC)

Compact with large flow capacity.

Body width: 9.8mm,
Nℓ/min: 19.63 (Standard, high pressure style)
Nℓ/min: 39.26 (Option, large flow style)

Options

External non-leak
Latching style
Negative COM specifications
AC voltage
Normally open
Vacuum (1)

Note 1) Consult SMC for vacuum specifications.

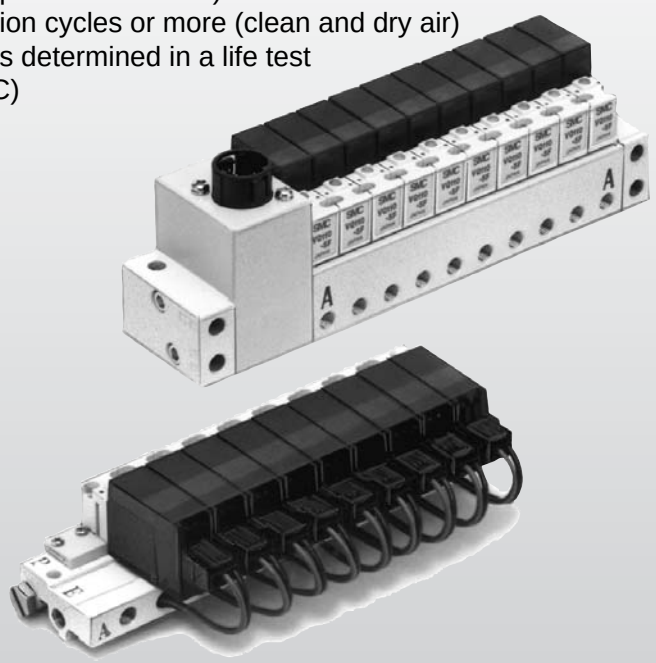

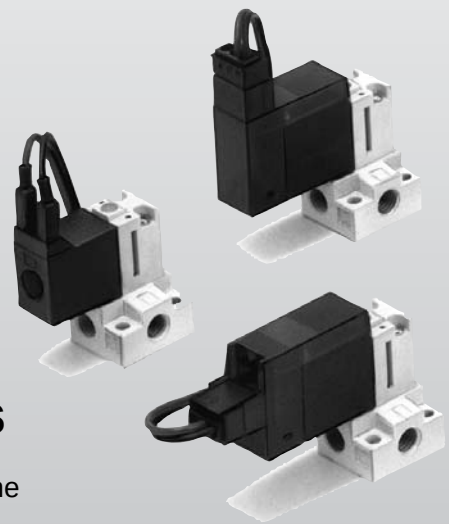

Copper-free specifications

The fluid contacting section is copper-free and the standard style can be used as it is.

A wide variation of wiring

Manifold

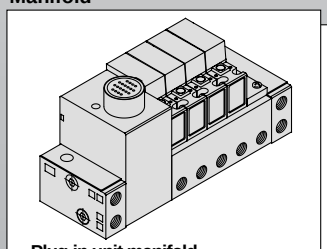

Plug-in unit manifold

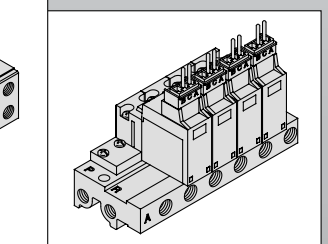

Plug lead unit manifold

Single unit

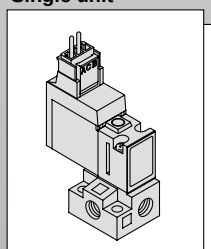

L plug connector

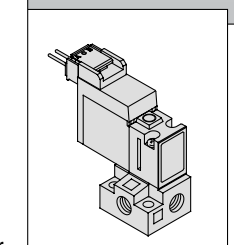

M plug connector

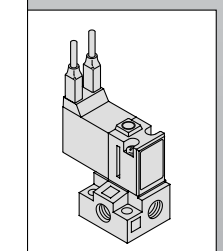

Grommet

⚠Precautions

Be sure to read before handling. Refer to p.0-33 to 0-36 for Safety Instructions and common precautions.

⚠Warning

Manual Override

The connected equipment will be operated when manual override is used. Check carefully before handling to make sure that there is no danger.

■Non-locking push flush style

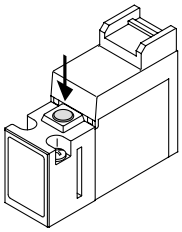

· It is turned ON by pushing the button in the direction indicated by the arrow until it hits the end and turned OFF by releasing the button.

■Locking slotted style (Option)

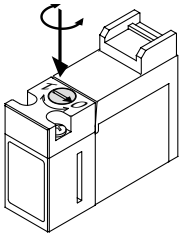

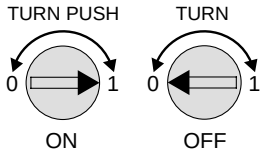

· It can be locked in the ON state by turning the manual override to the right, setting the ▶ mark to 1 and pushing it.
· It can be unlocked by turning the manual override to the left, setting the ▶ mark to 0 and pushing it, and the manual returns.

Note) Make sure the locking style manual override is unlocked before use.

■Push locking slotted style (Latching style)

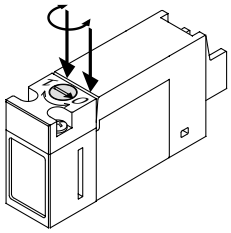

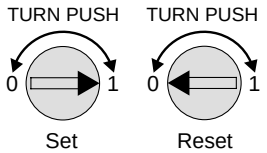

· It can be locked in the set state (flow: P → A) by turning the manual override to the right, setting the ▶ mark to 1 and pushing it.
· It can be turned back to the reset state (flow: A → R) by turning the manual override to the left, setting the ▶ mark to 0 and pushing it. (It is set in reset state when shipped.)

⚠Caution

When operating the lock style with a screwdriver, turn it softly using only small screwdrivers.
(Torque: Less than 0.1Nm)

⚠Caution

How to Use a Plug Connector

Connection/Disconnection of connector

● Push the connector straight onto the pins of the solenoid, making sure the lip of the lever is securely positioned in the groove on the solenoid cover.
● Press the lever against the connector and pull the connector away from the solenoid.

Note) GENTLY pull the lead wire, otherwise it may cause contact failure or disconnection.

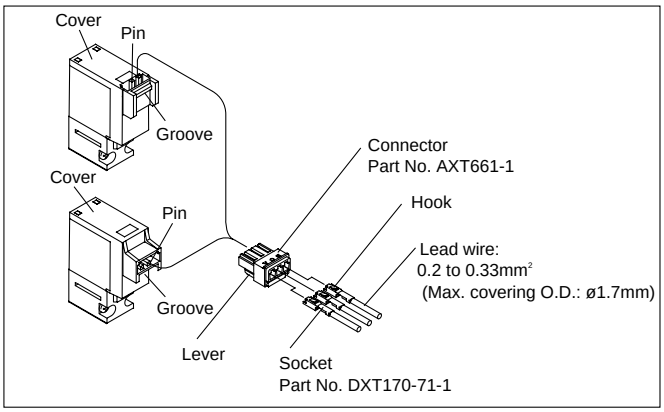

Crimping connection of lead wire and socket

Remove the insulation on the lead wire at the end from 3.2 to 3.7mm and insert the wires into the socket crimping area. Crimp the socket onto the wire using a crimping tool. Be careful not to let the insulation of the lead wire get into the wire crimping part. (Crimping tool: Part No. DXT170-75-1)

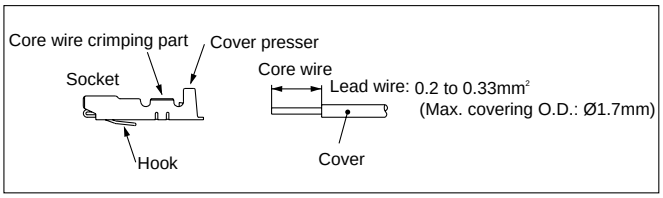

Connection/Disconnection of socket with lead wire

● Installation
Insert socket into the square hole (indicated as A, C and B) on the connector, hold the lead wire and push until it locks in place. Ensure that it is locked by pulling the lead wire a little.
● Removal
Pull and detach the lead wire, pressing in on the end of the hook of the socket through the side hole using a stick with thin end (about 1mm). To reuse the socket, extend the hook outward.

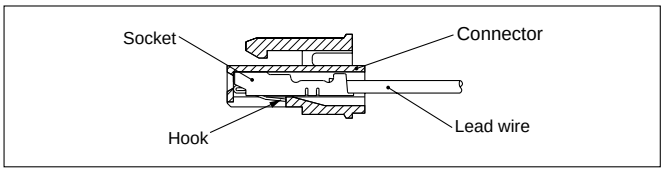

⚠Precautions

Be sure to read before handling. Refer to p.0-33 to 0-36 for Safety Instructions and common precautions.

⚠Caution

How to Use Plug Connector

Wiring

● Lead wires are connected as follows. Connect them to the power supply side.

DC Positive COM

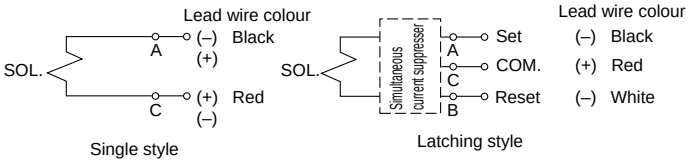

DC Negative COM

Note) Single style: No polarity

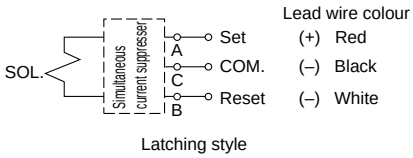

● **How to Order Connector Assembly**

DC Positive COM

·Single

AXT661-14A-□

·Latching

AXT661-13A-□

DC Negative COM

·Latching

AXT661-13AN-□

●Lead wire length (mm)

—	300
6	600
10	1000
20	2000
30	3000

●**Plug connector lead wire length**

The lead wire length of the valve with lead wire is 300mm.
When ordering a valve with lead wire of 600mm or more, order the valve without lead wire and order the lead wire separately.

⚠Caution

Light and Surge Voltage Suppressor

For latching style, set energizing side and reset the energizing side are indicated with orange and green respectively.

∗ ( ) and the broken line: Large flow capacity style

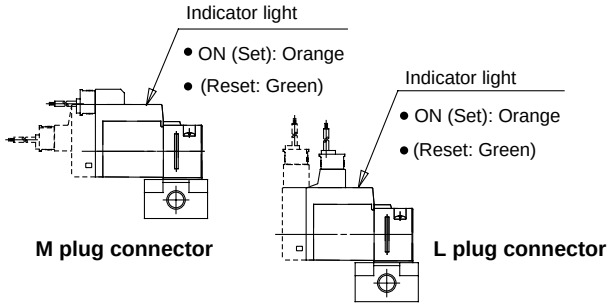

Single solenoid (DC)

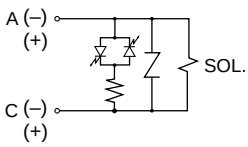

Latching solenoid (DC)

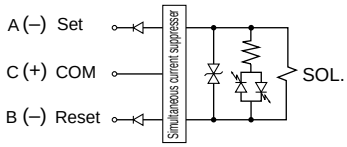

Note 1) Single: No polarity
ON: Orange light lights.

Note 2) Setting side energizing: Orange light lights.
Resetting side energizing: Green light lights.
With wrong wiring preventing ability (stop dieode)
With surge voltage suppresser (ZNR/Surge absorbing dieode)

Note 3) A (set) side energizing: P→A
B (set) side energizing: A→R

Note 4) Negative COM specification is applicable.

⚠Caution

Latching Style

The latching solenoid is equipped with a self-holding mechanism, which permits a movable iron core in the solenoid to hold the "set" position. Therefore there is no need to energize continuously.

<Special Cautions for Latching Solenoid>

1. Make sure ON and OFF signals are not energized simultaneously.
2. 10ms enegizing time is necessary for self-holding.
3. Consult SMC if using in a place with high vibrations (10G or more) or high magnetic fields.
4. This valve is shipped in the "reset" position (passage: A→ R). However, it may move to the "set" position during transportation or due to impacts during mounting. Therefore, check the initial position before use by means of a power supply or manual override.

Latching	Passage	Indicator light
A-C ON (Set)	P→A	Orange
B-C ON (Reset)	A→R	Green

Single	Passage	Indicator light
A-C ON	P→A	Orange
OFF	A→R	———

⚠Caution

How to Use of Multi-connector (For plug-in manifold: For VV3Q11)

①Connecton/Disconnection of Plug

● When mounting a connector: Align the positioning key grooves of the body to the key, and it is locked.

● When removing the connector: Pull the ring section straight back, and it is unlocked and then take it off.

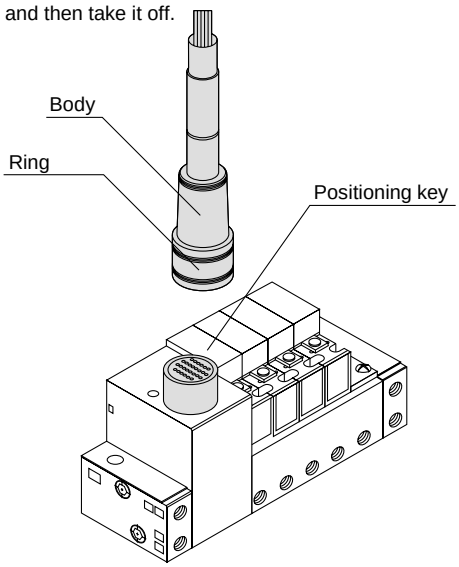

②Wiring Specifications

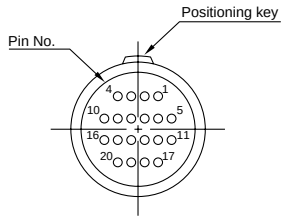

Multi-connector pin arrangement

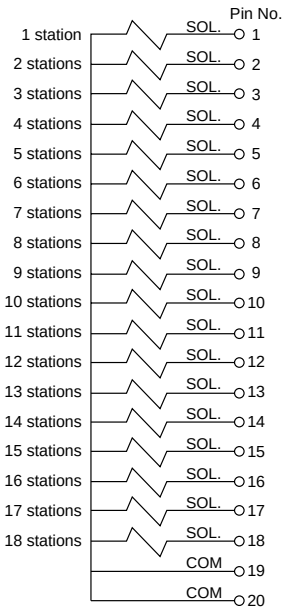

Electrical wiring specifications

Terminal No./Lead wire color

Termina No.	Lead wire colour	
	Wire color	Dot marking
1	Black	—
2	Brown	—
3	Red	—
4	Orange	—
5	Yellow	—
6	Pink	—
7	Blue	—
8	Violet	White
9	Gray	Black
10	White	Black
11	White	Red
12	Yellow	Red
13	Orange	Red
14	Yellow	Black
15	Pink	Black
16	Blue	White
17	Violet	—
18	Gray	—
19	Orange	Black
20	Red	White

⚠Caution

How to Connect/Disconnect DIN Rail

Removing

1) Loosen the clamp screw of the end plate on both sides.
2) Lift side A of the manifold base and slide the end plate in the direction of ② shown in the figure to remove.

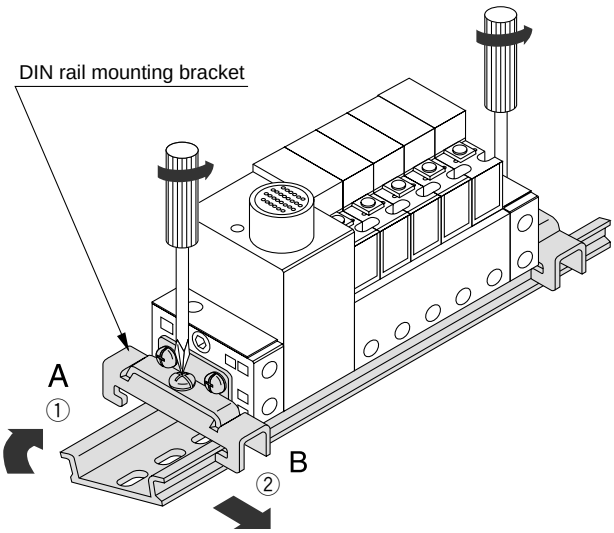

Mounting

1) Hook side B of the manifold base on the DIN rail.
2) Press down side A and mount the end plate on the DIN rail. Tighten the clamp screw on the side.
   Proper tightening torque of thread: 0.8 to 1.2Nm

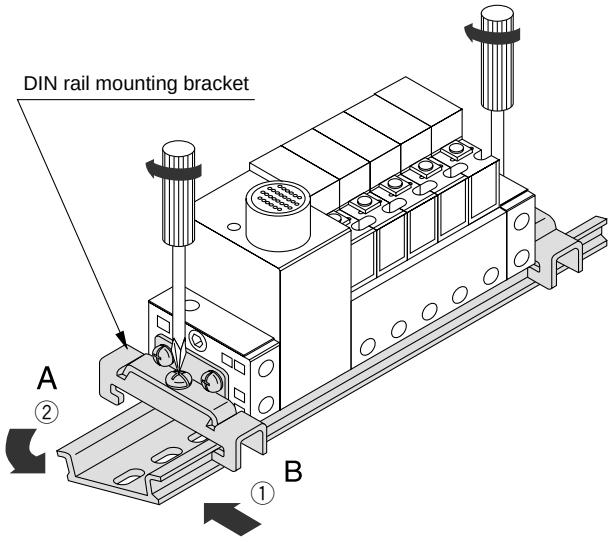

3 Port Solenoid Valve
Series VQ100

How to Order Valve

VQ1 1 0 ☐ — 5 F ☐ — ☐ -Q

Series VQ
Compact 3 port valve

Actuation

1	Normally closed

Functions

—	Standard style (1W)
H	High pressure style (1.5W)
Y (1)	Low wattage style (0.5W)
L *	Latching style Positive COM
N *	Latching style Negative COM
U *	Large flow capacity style

* Option
Note 1) Except for latching and large flow capacity style.

Coil Rated Voltage

5	24V DC
6	12V DC
9	50V or less

Order Made Contact SMC for other voltages (9)

Port size

—	Without sub-plate
M3	With sub-plate
M5	With sub-plate

Manual override

—	Non-locking push flush style
	Latching style: Push locking slotted style
B *	Locking slotted style

* Option
Note) Latching manual override: Push locking style only.

Electrical entry

F	Plug-in style With indicator light and surge voltage supperessor (only for plug-in manifold)	
L	L plug connector, With lead wire and light and surge voltage suppresser.	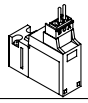
LO	L plug connector, Without connector, With indicator light and surge voltage suppressor	
M	M plug connector, With lead wire and light and surge voltage suppresser.	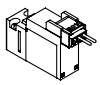
MO	M plug connector, Without connector, With indicator light and surge voltage suppressor	
G	Grommet	

Note) Grommet: No latching, AC and large flow capacity.

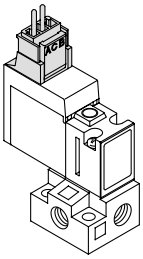
L plug connector

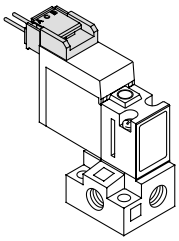
M plug connector

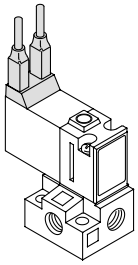
Grommet

Protective class
class III (Mark:⧫)

JIS symbol

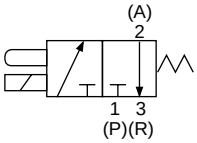

Normally closed

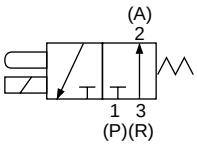

Normally open

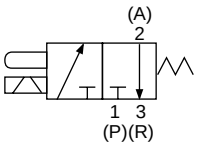

Latching style

Standard Specifications

Item			Style: Standard (1W)	High pressure (1.5W)	Low wattage (0.5W)
Valve	Valve structure		3 port direct operated poppet (NC)		
	Fluid		Air, Inert gas		
	Max. operating pressure		0.7MPa	0.8MPa	0.7MPa
	Min. operating pressure		0MPa		
	Effective area	1→2	0.28mm² (Nℓ/min 15.7)		0.14mm² (Nℓ/min 7.85)
		2→3	0.36mm² (Nℓ/min 19.63)		0.20mm² (Nℓ/min 10.8)
	Response time (1)		ON: 3.5ms, OFF: 2ms		ON: 3.5ms, OFF: 2.5ms
	Ambient and fluid temperature		–10 to 50°C (2)		
	Lubrication		Not required		
	Manual override		Non-locking push/Locking slotted (3)		
	Mounting operation		Free		
	Shock/Vibration resistance (4)		150/30m/s²		
	Protection structure		Dust proof		
	Weight		12.6g (L/M connector, Without subplate)		
Solenoid	Coil rated voltage	DC	24V DC, 12V DC		
	Allowable voltage		±10% of rated voltage		
	Coil insulation		Class B or equivalent		
	Power consumption (Current)	DC	1W (42mA)	1.5W (63mA)	0.5W (21mA)
	Electrical entry		Grommet Plug-in, L plug connector, M plug connector (With indicator light and surge voltage suppressor)		

Note 1) As per JISB8374-1993. With light/surge voltage suppressor (clean air), Dispersion accuracy ±1ms
Note 2) Use dry air to prevent condensation when operating at low temperatures.
Note 3) Locking style: Option
Note 4) Shock resistance: No malfunction resulted from the impact test using a drop impact tester. The test was performed on the axis and right angle directions of the main value and armature, for both energized and de-energized states.
Vibration resistance: No malfunction occurred in a one-sweep test between 8.3 and 2000Hz. Test was performed at both energized and de-energized states to the axis and right angle directions of the main value and armature. (Value in the initial stage.)

Option Specifications

Item		Type	Latching	AC	Large flow capacity	Normally open
Valve	Model		**VQ110-□-Q**	**VQ110-½□-Q**	**VQ110U-□-Q**	**VQ120-□-Q**
	Max. operating pressure		0.7MPa		0.6MPa	0.5MPa
	Effective area	1→2	0.14mm² (Nℓ/min 7.85)		0.68mm² (Nℓ/min 37.3)	3→2: 0.20mm² (Nℓ/min 10.8)
		2→3	0.20mm² (Nℓ/min 10.8)		0.68mm² (Nℓ/min 37.3)	2→1: 0.14mm² (Nℓ/min 7.85)
	Response time (2)		5ms or less	6.5 or less	5ms or less	5ms or less
Solenoid	Power consumption (Current)	24V DC	1W (42mA)	—	0.7W (29mA) (3)	1W (42mA)
		12V DC	1W (83mA)	—	0.7W (29mA) (3)	1W (83mA)
	Electrical entry (1)		Plug-in, L plug connector, M plug connector (With indicator light and surge voltage suppressor)			

Note 1) Grommet is available only for normally open style (without light/surge voltage suppressor).
Note 2) With light/surge voltage suppressor based on JISB8374-1993 (clean air).
Note 3) Inrush: 3.1W (10ms after energized.), Holding: 0.7W

Clean Series

Clean series is available for both standard and option specifications.

How to Order Valve

10-VQ110□-□

● Clean series

How to Order Valve

VQ1 1 0 □ — 5 L □ — M5 -Q

Series VQ
Compact 3 port valve

Actuation

1	Normally closed
2	Normally open

Functions

—	Standard (1W)
H	High pressure (1.5W)
Y(1)	Energy saver (0.5W)
L*	Latching Positive COM.
N*	Latching Negative COM
U*	Large flow capacity

∗ Option
Note 1) Except for latching and large flow capacity style.

Coil rated voltage

5	24V DC
6	12V DC
9	50V or less

Order Made Contact SMC for other voltages (9)

Port size

—	Without sub-plate
M3	With sub-plate
M5	With sub-plate

Manual override

—	Non-locking push flush style
	Latching style: Locking-push tool style
B*	Locking slotted style

∗ Option
Note) Latching style manual override: Locking-push slotted style only.

Electrcal entry

L	L plug connector, With lead wire and light/surge voltage suppressor
LO	L plug connector, Without connector, With indicator light and surge voltage supressot
M	M plug connector, With lead wire and light/surge voltage suppressor
MO	M plug connector Without connector, With indicator light and surge voltage supressor.
G	Grommet

Note) Grommet: No latching style, AC and large flow capacity style

Dimensions

Grommet

VQ1□0□-□G□M5 (M3)-Q

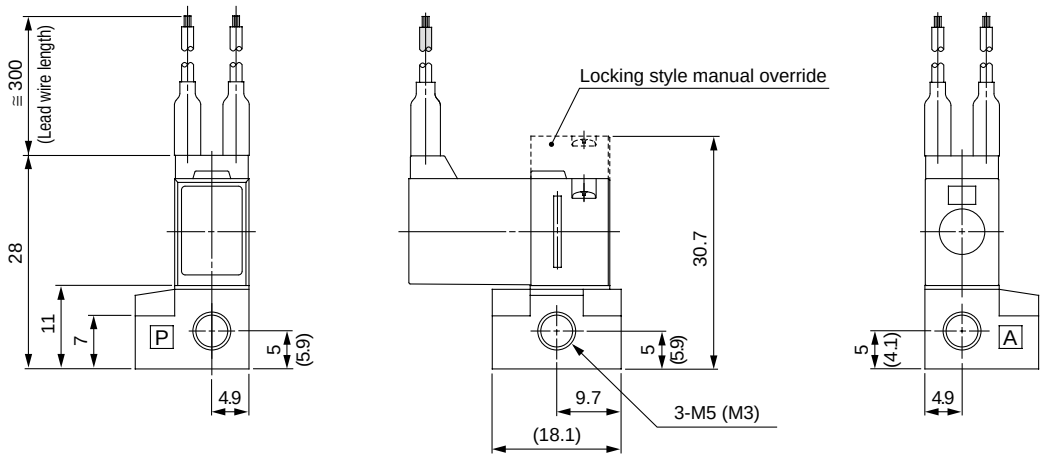

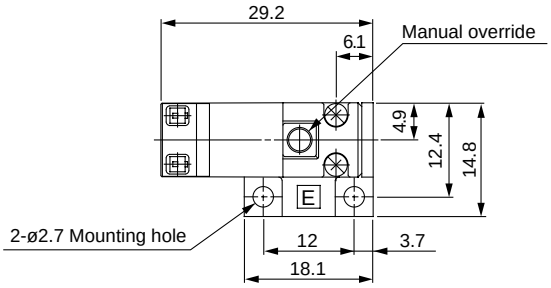

· ( ): M3
· Broken line: locking style manual override

Dimensions

L plug connector

VQ1□0□-□L□M5 (M3)-Q

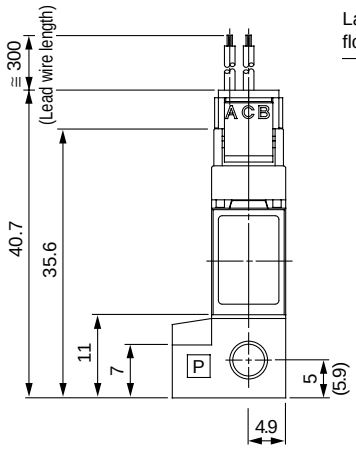

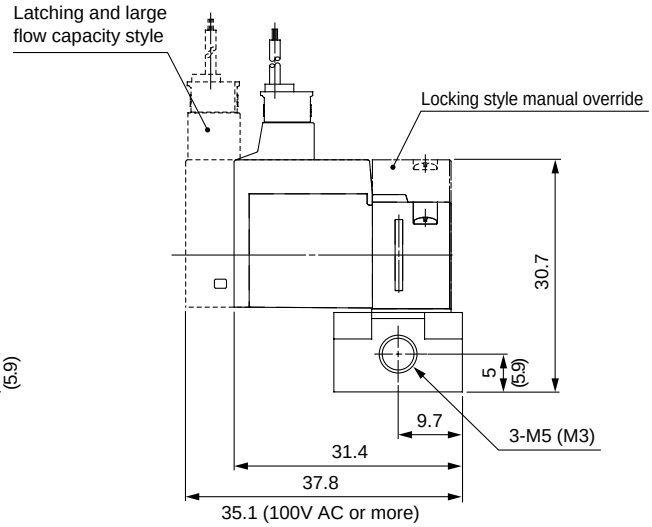

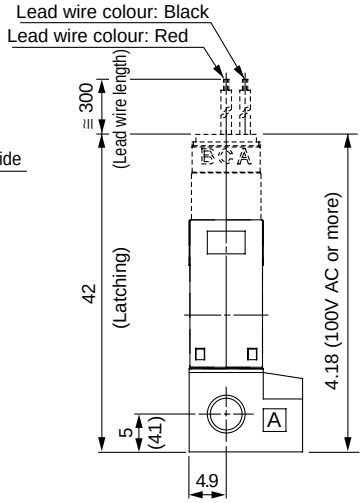

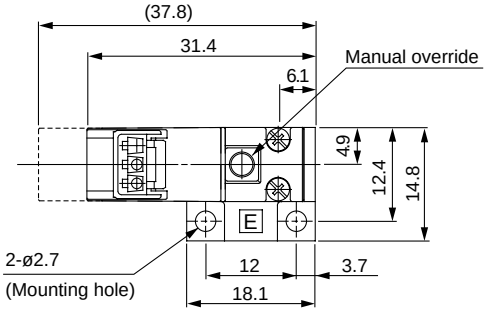

· ( ): M3
· Broken line: Latching and large flow capacity
· Dashed line: Locking style manual override and locking push style manual override (latching)

M plug connector

VQ1□0□-□M□M5 (M3)-Q

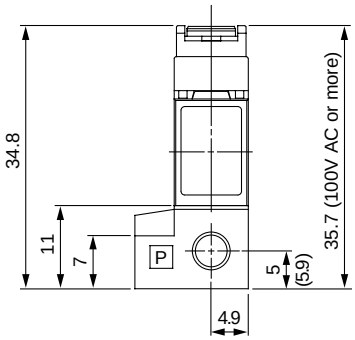

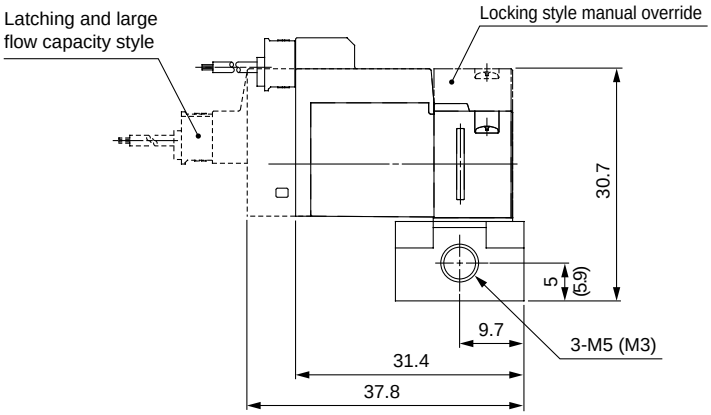

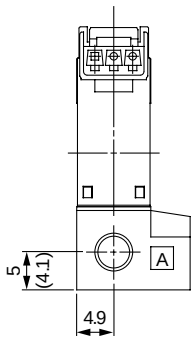

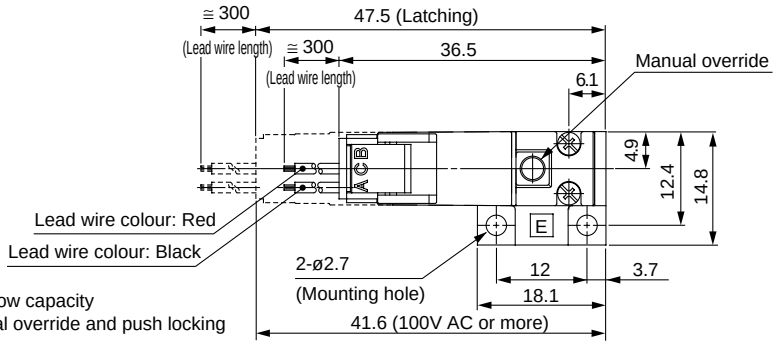

· ( ): M3
· Broken line: Latching and large flow capacity
· Dashed line: Locking style manual override and push locking style manual override (latching)

How to Order Manifold

Plug-in Unit Manifold **VV3Q 1 1 — 08 C U 1 — D -Q**

Applicable Solenoid Valve (Plug-in style)
VQ1□0□-□F-Q
- Consult SMC for mounting latching style.
- Possible to mount U type (large flow capacity).

Series

1	VQ100

Manifold base

1	Plug-in unit

Stations

02	2 stations
⋮	⋮
18	18 stations

Note) Normally closed and normally open style cannot be mounted on the same manifold.

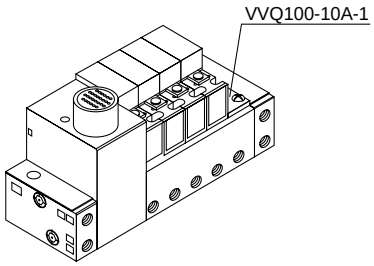

Electrical entry

C	Multi-connector

Connector location

U	Top entry
S	Side entry

Cable length

0	Without cable
1	With cable (1.5m)
2	With cable (3m)
3	With cable (5m)

Option

—	None
D	DIN rail mounted (With standard length of DIN rail)
DO (1)	DIN rail mounted (Without DIN rail)

Protective class class III (Mark:◇)

Note 1) Order DIN rail separately. Refer to p.2.8-15 for "How to Order" for DIN rail.

How to Order Manifold Assembly

Suffix valve and option nos. to the manifold base No.

〈Example〉
Plug-in unit manifold with cable (3m)

VV3Q11-05CU2-Q ····· 1 set — Manifold base part No.
VQ110-5F-Q ····· 4 set — Valve part No. (1st to 4th stations)
VVQ100-10A-1 ····· 1 set — Blank plate (5th station)

Write sequentially from the 1st station on the D side.

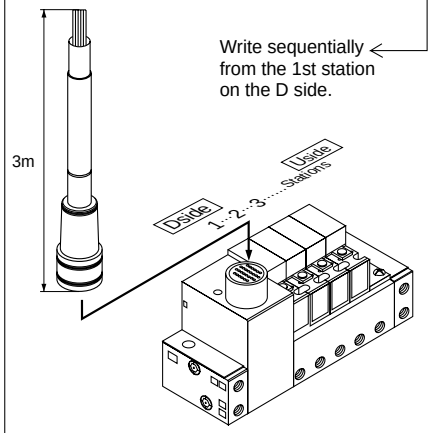

How to Order Valve

VQ1 1 0 □ — 5 F □ -Q

Series VQ
Compact 3 port valve

Actuation

1	Normally closed
2	Normally open

Functions

—	Standard (1W)
H	High pressure (1.5W)
Y (1)	Low wattage (0.5W)
U*	Large flow capacity

*: Option
Note 1) Except for large flow capacity style.

Coil rated voltage

5	24V DC
6	12V DC
9	50V or less

Order Made: Contact SMC for other voltages (9)

Electrical entry

F	Plug-in style With indicator light and surge voltage suppressor (Only for plug-in manifold)

Manual override

—	Non-locking push flush style
B*	Locking slotted style

*: Option

Plug-in Unit (VV3Q11) Manifold with Multi-connector

The broken line indicates DIN rail mounted style (-D) and side entry connector (S).

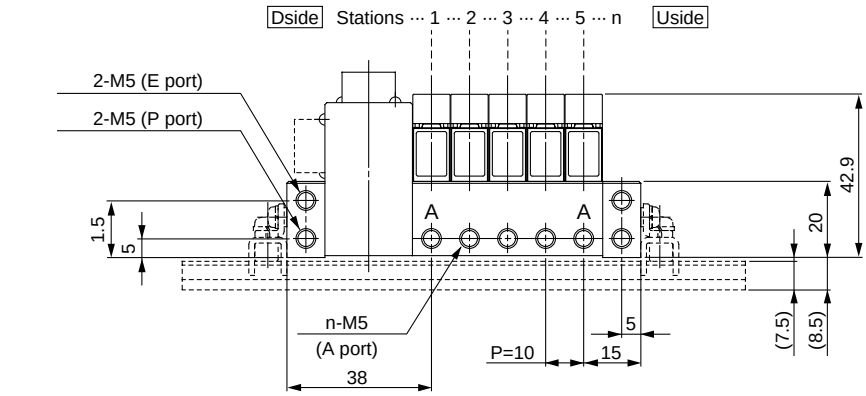

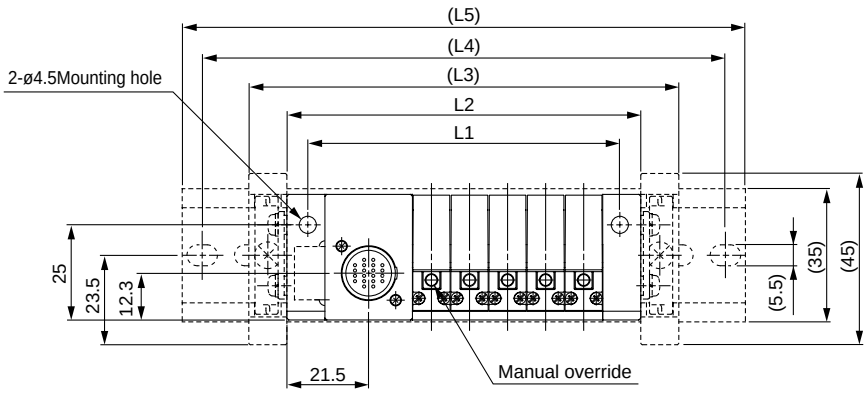

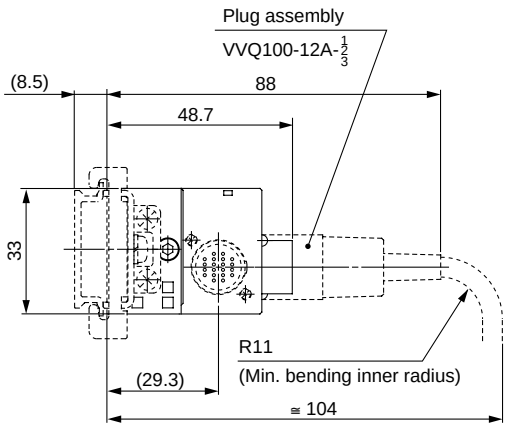

Dimensions

Equation: L1=10n+32 L2=10n+43 n: Station (Max. 18)

L \ n	2	3	4	5	6	7	8	9	10	11	12	13	14	15	16	17	18
L1	52	62	72	82	92	102	112	122	132	142	152	162	172	182	192	202	212
L2	63	73	83	93	103	113	123	133	143	153	163	173	183	193	203	213	223
(L3)	83	93	103	113	123	133	143	153	163	173	183	193	203	213	223	233	243
(L4)	112.5	112.5	125	137.5	150	162.5	162.5	175	187.5	200	212.5	212.5	225	237.5	250	262.5	262.5
(L5)	123	123	135.5	148	160.5	173	173	185.5	198	210.5	223	223	235.5	248	260.5	273	273

How to Order Manifold

Plug Lead Unit Manifold

VV3Q 1 2 — 08 01N -Q

Applicable Solenoid Valve (Plug lead style)
VQ1□0□-□L-Q
VQ1□0□-□M-Q
VQ1□0□-□G-Q

Note) Normally closed and normally open style cannot be mounted on the same manifold.

Series

1	VQ100

Manifold base

2	Plug lead unit
2U	Plug lead unit U type (large flow capacity) mounting base

Stations

02	2 stations
⋮	⋮
20	20 stations

VVQ1000-10A-2

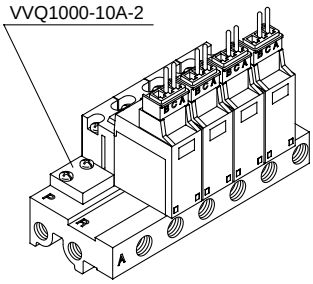

Port size* and thread

—	M5, Rc(PT)1/8
01N	NPT1/8
01T	NPTF1/8
01F	G(PF)1/8

* Only thread port size 1/8 style (2U type, P/E port) has choice of thread.

Protective class class III (Mark:⦶)

How to Order Manifold Assembly

Suffix valve and option numbers for the manifold base No.

〈Example〉
Plug lead unit manifold with cable (3m)

VV3Q12-05-Q ····· 1 set — Manifold base No.
VQ110-5L-Q ····· 4 sets — Valve No. (1st to 4th stations)
VVQ100-10A-2 ····· 1 set — Blank plate part No. (5th station)

Write sequentially from the 1st station on the D side.

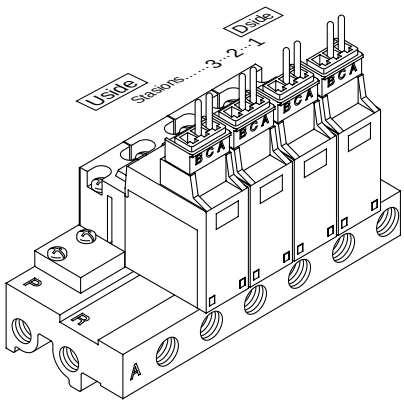

How to Order Valve

VQ1 1 0 — 5 L -Q

Series VQ
Compact 3port valve

Actuation

1	Normally close
2	Normally open

Functions

—	Standard (1W)
H	High pressure (1.5W)
Y (1)	Low wattage (0.5W)
L *	Latching
N *	Negative COM
U *	Large flow capacity

*: Option
Note) Except for latching and large flow capacity style.

Coil rated voltage

5	24V DC
6	12V DC
9	50V or less

Order Made Contact SMC for other voltages (9)

Manual override

—	Non-locking push flush style
	Latching type: Looking-push slotted style
B *	Locking slotted style

*: Option
Note) Latching manual override: Looking-push style only.

Electrical entry

L	L plug connector, With lead wire and light/surge voltage suppresser
LO	L plug connector, Without connector, With indicator light and surge voltage suppressor
M	M plug connector, With lead wire and light/surge voltage suppresser
MO	M plug connector, Without connector, With light/surge voltage suppresser
G	Grommet

Note) Grommet: No AC and large flow capacity style.

Plug Lead Unit Manifold (VV3Q12)

	L type		M type	
	W	H	W	H
Latching	35.1	43.5	44.8	32.2
100V AC or more	32.4	43.3	38.9	37.2

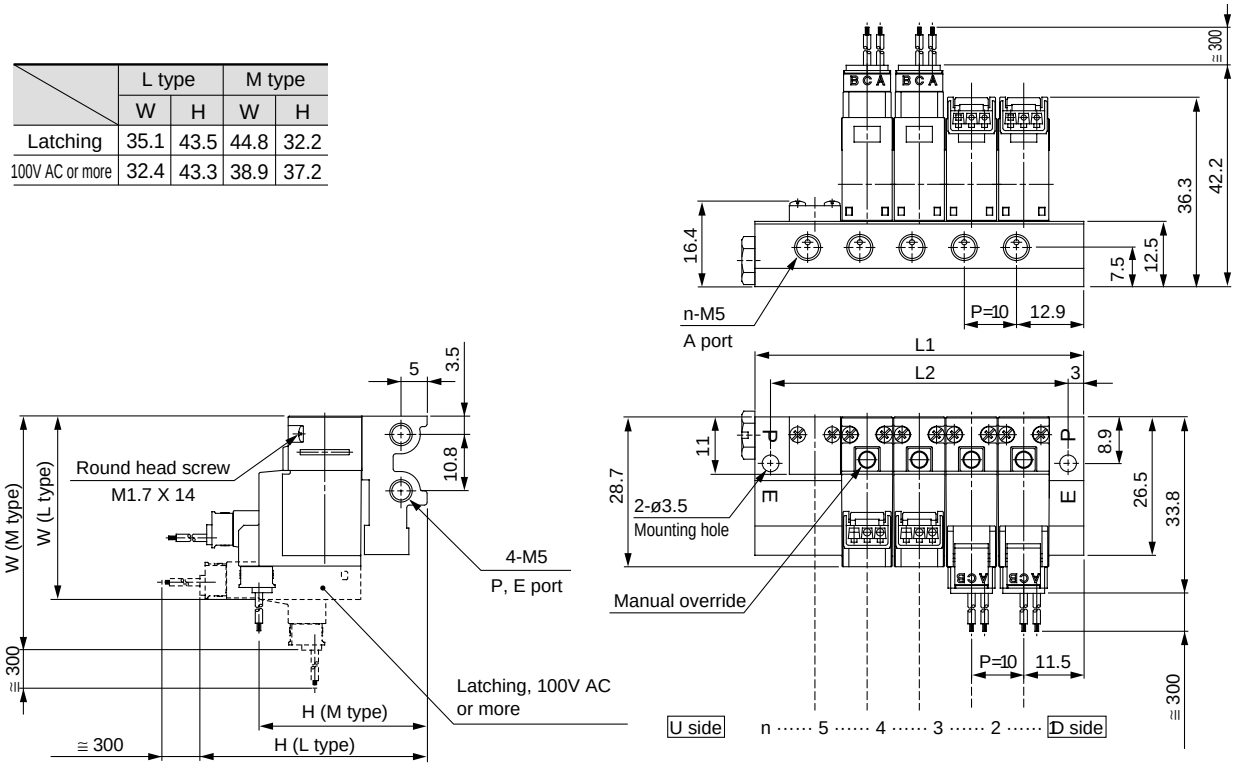

Dimensions Equation: L1=10n+13 L2=10n+7 n: Station (Max. 20 stations)

L \ n	1	2	3	4	5	6	7	8	9	10	11	12	13	14	15	16	17	18	19	20
L1	23	33	43	53	63	73	83	93	103	113	123	133	143	153	163	173	183	193	203	213
L2	17	27	37	47	57	67	77	87	97	107	117	127	137	147	157	167	177	187	197	207

Plug Lead Unit U Type (Large Flow Capacity) Mounted Manifold (VV3Q12U)

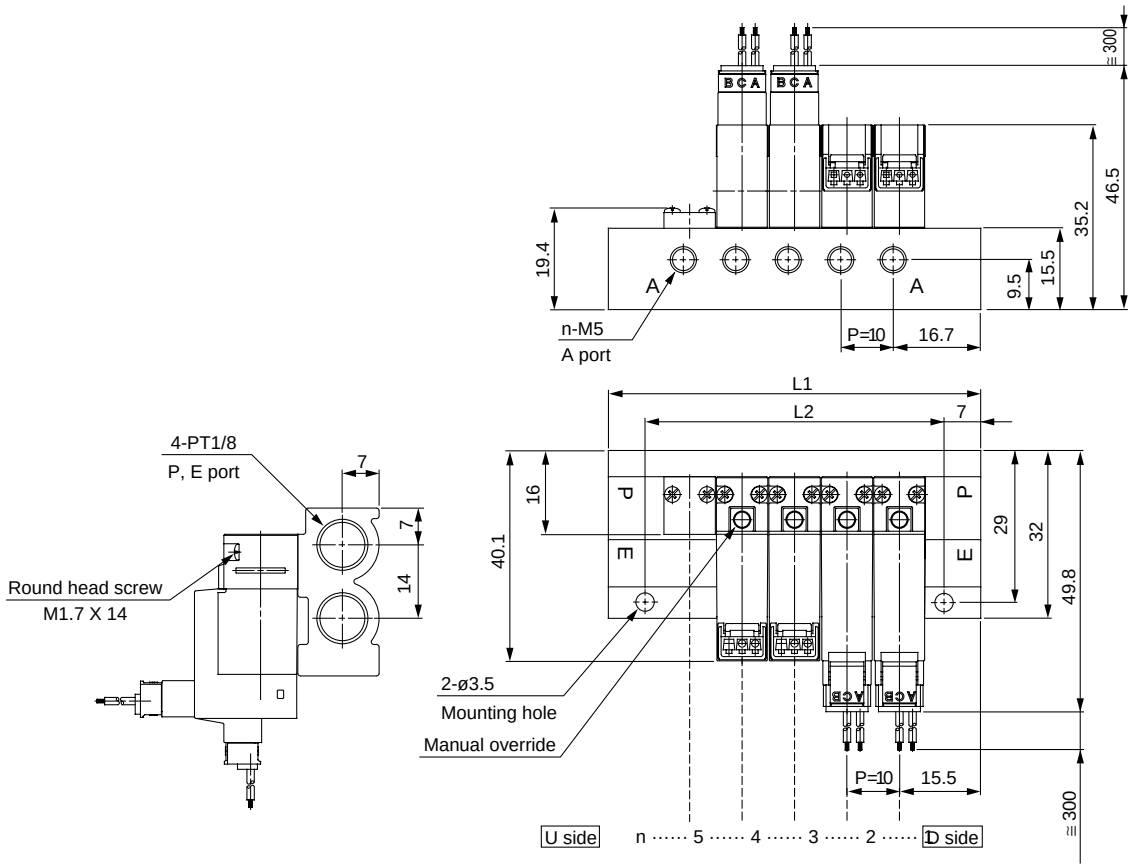

Dimensions Equation: L1=10n+21 L2=10n+7 n: Station (Max. 20 stations)

L \ n	1	2	3	4	5	6	7	8	9	10	11	12	13	14	15	16	17	18	19	20
L1	31	41	51	61	71	81	91	101	111	121	131	141	151	161	171	181	191	201	211	221
L2	17	27	37	47	57	67	77	87	97	107	117	127	137	147	157	167	177	187	197	207

Construction

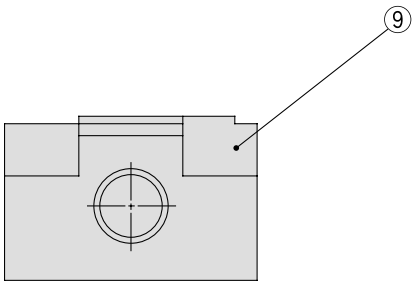

(N.C. valve)

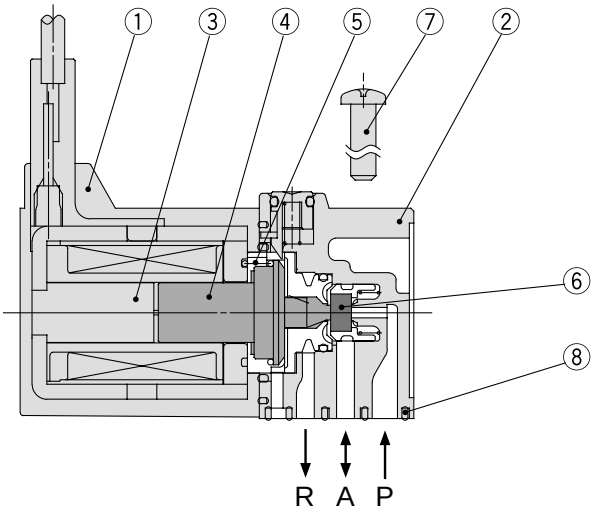

Component Parts

No.	Description	Material
①	Solenoid coil	—
②	Body	Resin
③	Fixed iron core	Stainless steel
④	Movable iron core assembly	Stainless steel, Resin
⑤	Return spring	Stainless steel
⑥	Poppet	NBR
⑦	Phillips/ordinary round head screw	Carbon steel
⑧	Interface gasket	NBR

Replacement Parts

No.	Part	Material	Part No.
⑨	Sub-plate	ZDC	AXT662-1-$\frac{1}{2}$ (1: M5, 2: M3)

Optional Parts

· Gasket, screw: VQ100-GS-5

Note) 1 set includes: 1 gasket and 2 screws. Please order 10 sets at a time.

Manifold Option

Plug Assembly

VVQ100-12A-$^{1}_{2}_{3}$

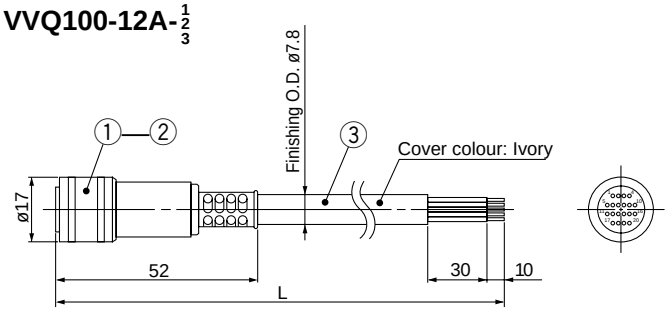

1	Plug	RP13A-12PS-20SC 〈Made by Hirose Electric〉
2	Female contact	RP19-SC-222 〈Made by Hirose Electric〉
3	Vinyl multi-core cable	VVRF 0.2mm^2 20-core

Cable Length

Model	L dimensions
VVQ100-12A-1	1.5m
VVQ100-12A-2	3m
VVQ100-12A-3	5m

Blank Plate Assembly

VVQ100-10A-1

Plug-in unit **(VV3Q11)** for manifold with multiple connectors

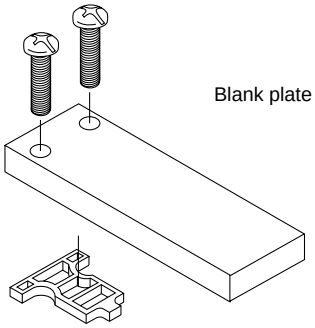

Blank plate with 2 screws and gasket

VVQ100-10A-2

Plug lead unit **(VV3Q12)** for manifold

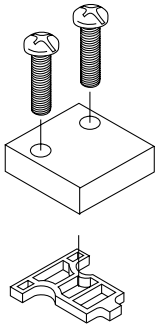

Blank plate with 2 screws and gasket

VV3Q11 For Manifold With Multi-connector

〈D Side End Plate Assembly〉

D side end plate assembly part number

VVQ100-3A-□

Option

1	Standard
2	DIN rail mounting

〈U Side End Plate Assembly〉

U side end plate assembly part number

VVQ100-2A-□

Option

1	Standard type
2	DIN rail mounting

〈DIN Rail Mounting Bracket Assembly〉

DIN rail mounting bracket part number.

AXT802-1A-□

Mounting direction

D	D side mounting
U	U side mounting

Note) The number of manifold stations cannot be changed.

How to Order Only DIN Rail

DIN rail part number: AXT100-DR-□

∗Refer to DIN rail dimension table below and put number into □ to order DIN rail. Refer to the manifold dimensions on p.2.8-11 to know L size.

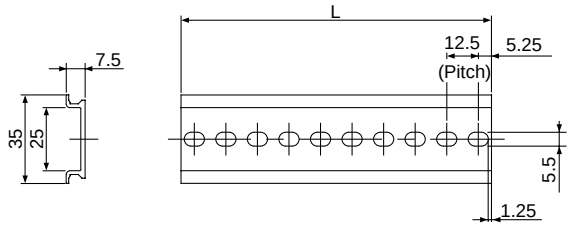

L Size Dimensions L=12.5n+10.5

No.	1	2	3	4	5	6	7	8	9	10
L size	23	35.5	48	60.5	73	85.5	98	110.5	123	135.5
No.	11	12	13	14	15	16	17	18	19	20
L size	148	160.5	173	185.5	198	210.5	223	235.5	248	260.5
No.	21	22	23	24	25	26	27	28	29	30
L size	273	285.5	298	310.5	323	335.5	348	360.5	373	385.5
No.	31	32	33	34	35	36	37	38	39	40
L size	398	410.5	423	435.5	448	460.5	473	485.5	498	510.5