

Image may differ from product. See technical specification for details.

F2BSS 40M-CPSS-DFH

Flanged ball bearing unit with composite or cast metal housing

Flanged ball bearing units consisting of an insert bearing mounted in a composite or cast metal housing that can be bolted to a machine wall or frame. In addition to being part of a unit, some flanged housings for insert bearings are available as separate components. The SKF assortment includes ball bearing units compliant with several industrial standards, meeting many requirements regarding bolt patterns and mechanisms for locking onto the shaft.

- Ready to mount
- Lubricated and sealed bearings
- Quick locking on the shaft
- Large variety of housing shapes, housing materials, and locking methods
- Concentric locking options for high speeds and low vibration

Overview

Dimensions

Shaft diameter	40 mm
Housing overall width	38.9 mm
Width, total	53.2 mm
Centre distance between bolt holes	143.7 mm
Bearing width, total	40.7 mm
Attachment bolt diameter	12 mm

Performance

Basic dynamic load rating	24.7 kN
Basic static load rating	19 kN
Limiting speed	500 r/min

Properties

Housing type	Flanged
Flanged housing type	Oval
Number of bolt holes for fasteners	2
Fastening bolt hole type	Plain
Retaining feature, inner ring	Set screws
Bore type	Cylindrical
Rubber seating ring	Without
Material, housing	Stainless steel
Material, bearing	Stainless steel
Coating	Without
Sealing, bearing	Seal on both sides and flinger on one side
Sealing type	Contact, gutter
Sealing, unit	End cover and back seal
Lubricant	Grease
Relubrication hole	Without
Grease fitting	Without
Unit system	Metric

Logistics

Product net weight	1.7 kg
eClass code	23-05-08-02
UNSPSC code	31171536

Technical specification

Compliance with standard	Not standardized
Purpose specific	For food and beverage applications
Material, housing	Stainless steel
Sealing, bearing	Seal on both sides and flinger on one side
Sealing type, bearing	Contact, gutter
Sealing, unit	End cover and back seal
Coating	Without

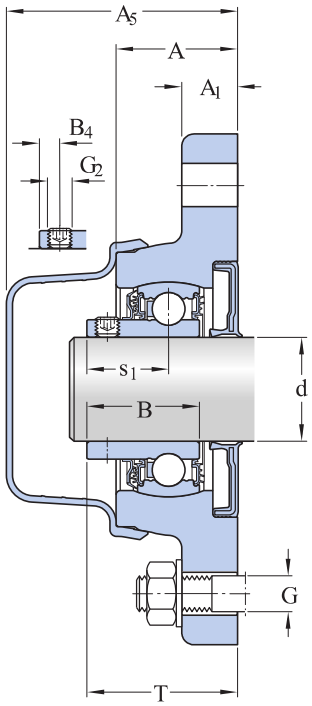

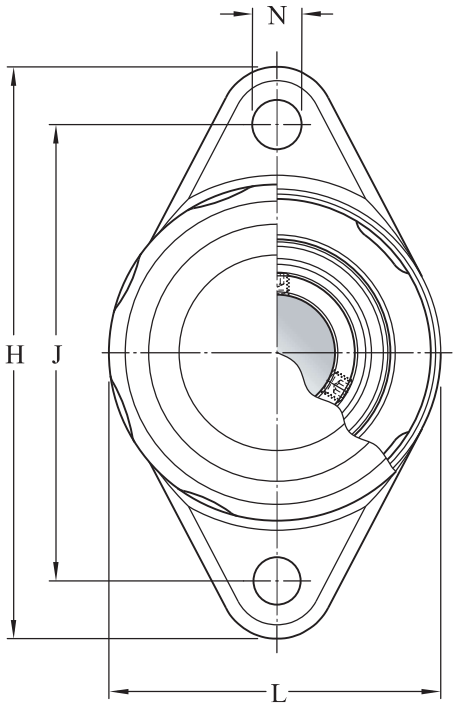

Dimensions

d	40 mm	Bore diameter
d_1	≈ 51.8 mm	Outer diameter of inner ring
A	38.9 mm	Width of housing
A_1	14.3 mm	Flange width
A_5	68.8 mm	Standout of end cover
A_5	68.8 mm	Width including end cover
B	40.7 mm	Width of inner ring
B_4	10 mm	Distance from locking device side face to thread centre
D_c	88 mm	Diameter of housing centering recess
H	171.5 mm	Overall height
H_a	6 mm	Depth of housing centering recess
J	143.7 mm	Centre distance between bolt holes
L	95.1 mm	Overall length
N	14.3 mm	Diameter of attachment bolt hole
s_1	30.2 mm	Distance from locking device side face to raceway centre
T	53.2 mm	Overall width

Calculation data

Basic dynamic load rating	C	24.7 kN
Basic static load rating	C_0	19 kN
Fatigue load limit	P_u	0.8 kN
Limiting speed		500 r/min

Mounting information

Set screw	G_2	M8x1
Hexagonal key size for set screw		4 mm
Recommended tightening torque for set screw		6.5 N·m
Recommended diameter for attachment bolts, mm	G	12 mm
Recommended diameter for attachment bolts, inch	G	0.5 in

Tolerances and clearances

The values depend on the included bearing:

- Bore diameter tolerance → table 1
- Radial internal clearance → table 2
- Recommended fit → table 3
- Shaft tolerance → table 4

Compatible products

Component

End cover for bearing units	ECB 508

Terms of use

By accessing and using this website / app owned and published by AB SKF (publ.) (556007-3495 · Gothenburg) (“SKF”), you agree to the following terms and conditions:

Warranty Disclaimer and Limitation of Liability

Although every care has been taken to assure the accuracy of the information on this website / app, SKF provides this information "AS IS" and DISCLAIMS ALL WARRANTIES, EXPRESS OR IMPLIED, INCLUDING, BUT NOT LIMITED TO, IMPLIED WARRANTIES OF MERCHANTABILITY AND FITNESS FOR A PARTICULAR PURPOSE. You acknowledge that your use of this website / app is at your sole risk, that you assume full responsibility for all costs associated with use of this website / app, and that SKF shall not be liable for any direct, incidental, consequential, or indirect damages of any kind arising out of your access to, or use of the information or software made available on this website / app.

Any warranties and representations in this website / app for SKF products or services that you purchase or use will be subject to the agreed upon terms and conditions in the contract for such product or service.

Further, for non-SKF websites / apps that are referenced in our website / app or where a hyperlink appears, SKF makes no warranties concerning the accuracy or reliability of the information in these websites / apps and assumes no responsibility for material created or published by third parties contained therein. In addition, SKF does not warrant that this website / app or these other linked websites / apps are free from viruses or other harmful elements.

Third Party Services

When viewing YouTube content via the SKF website(s) (i.e. using YouTube API Services), you agree to be bound by the YouTube Terms of Service.

Copyright

Copyright in this website / app copyright of the information and software made available on this website / app rest with SKF or its licensors. All rights are reserved. All licensed material will reference the licensor that has granted SKF the right to use the material. The information and software made available on this website / app may not be reproduced, duplicated, copied, transferred, distributed, stored, modified, downloaded or otherwise exploited for any commercial use without the prior written approval of SKF. However, it may be reproduced, stored and downloaded for use by individuals without prior written approval of SKF. Under no circumstances may this information or software be supplied to third parties.

This website /app includes certain images used under license from Shutterstock, Inc.

Trademarks and Patents

All trademarks, brand names, and corporate logos displayed on the website / app are the property of SKF or its licensors, and may not be used in any way without prior written approval by SKF. All licensed trademarks published on this website / app reference the licensor that has granted SKF the right to use the trademark. Access to this website / app does not grant to the user any license under any patents owned by or licensed to SKF.

Changes

SKF reserves the right to make changes or additions to this website / app at any time.