Dwyer

SUBMERSIBLE LEVEL TRANSMITTERS

Perfect for Ground Water and Wells, Lightning Protected

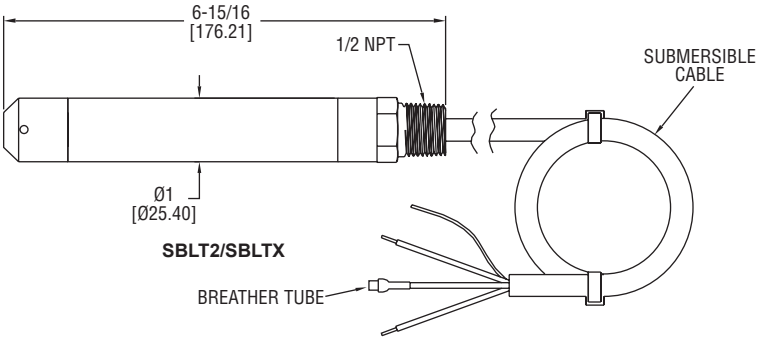

Scan here to watch product video

The **SERIES SBLT2 & SBLTX** Submersible Level Transmitters are manufactured for years of trouble free service. These series measure the height of liquid above the position in the tank referenced to atmospheric pressure. The transmitter consists of a piezoresistive sensing element, encased in a 316 SS housing.

FEATURES/BENEFITS

- Slim design for tight applications with bullet nose design which protects the diaphragm from damage
- Incorporates lightning and surge protection utilizing dual arrestor technology, grounded to case, eliminating both power supply surges and lightning ground strike transients (surge protection is not guaranteed and is not covered by warranty) on SBLT2 models
- Maintenance free filter eliminates particulate or water droplets from entering the transducer
- UL approved intrinsically safe on SBLTX models for use in hazardous locations when used with proper barrier
- 270 lb tensile strength shielded and vented cable
- Excellent chemical compatibility
- NPT connection allows the unit to be rigidly installed in a pipe/conduit, or the addition of a A-625 hanging loop for attaching a chain for pulling out of the installation

APPLICATIONS

- Well monitoring
- Ground water monitoring
- Environmental remediation
- Surface water monitoring
- Down hole
- Water tanks

SPECIFICATIONS

Service: Compatible liquids.
Wetted Materials: 316 SS, 316L SS, epoxy; Cable: Polyurethane or ETFE; Bullet nose: PVC.
Accuracy: ±0.25% FS.
Temperature Limit: SBLT2: 0 to 150°F (-18 to 66°C); SBLTX: 0 to 176°F (-18 to 80°C).
Compensated Temperature Range: SBLT2: 0 to 140°F (-18 to 60°C); SBLTX: 0 to 176°F (-18 to 80°C).
Thermal Effect: ±0.02% FS/°F.
Pressure Limit: 2X FS.
Power Requirement: SBLT2: 13 to 30 VDC; SBLTX: 10 to 28 VDC.
Output Signal: 4 to 20 mA DC, 2-wire.
Response Time: 50 ms.
Max. Loop Resistance: 900 Ω at 30 VDC.
Electrical Connections: Wire pigtail.
Mounting Orientation: Suspended in tank below level being measured.
Electrical Protection: SBLT2: Lightning and surge protection; SBLTX: None.
Weight: 2.2 lb (1.0 kg).
Agency Approvals: SBLT2: None; SBLTX: CE, cULus intrinsically safe for Class I, Div. 1, Groups A, B, C, D; Class II, Div. 1, Groups E, F, G; Class III Div. 1. (according to control drawing 01-700797-00)*.

*Up to 196 ft (59.5 m) for ETFE cable; Up to 333 ft (101.5 m) for polyurethane cable

MODEL CHART

Model	Range psi* (ft w.c.) [m w.c.]	Cable Length ft (m)	Cable Type
SBLT2-5-40-ETFE	5 (11.54) [3.52]	40 (12.2)	ETFE
SBLT2-10-40-ETFE	10 (23.09) [7.04]	40 (12.2)	ETFE
SBLT2-15-60-ETFE	15 (34.63) [10.56]	60 (18.3)	ETFE
SBLT2-20-60-ETFE	20 (46.18) [14.08]	60 (18.3)	ETFE
SBLT2-5-40	5 (11.54) [3.52]	40 (12.2)	Polyurethane
SBLT2-10-40	10 (23.09) [7.04]	40 (12.2)	Polyurethane
SBLT2-15-60	15 (34.63) [10.56]	60 (18.3)	Polyurethane
SBLT2-20-60	20 (46.18) [14.08]	60 (18.3)	Polyurethane
SBLT2-3.5M-5M	4.97 (11.48) [3.5]	16.40 (5)	Polyurethane
SBLT2-5M-10M	14.21 (32.81) [10]	32.81 (10)	Polyurethane
SBLT2-10M-18M	25.58 (59.06) [18]	59.06 (18)	Polyurethane

*Configured ranges below 5 psi (11.54 ft w.c.) (3.52 m w.c.) ±1% FS accuracy

Note: For intrinsically safe approval, change model number from SBLT2 to SBLTX. For custom ranges or cable lengths, contact the website for pricing.

ACCESSORIES

Model	Description
MTL5041	Intrinsically safe galvanic isolator
MTL7706	Intrinsically safe zener barrier
A-297	Dessicant filter for vent tube. Removes humidity for protection of the sensor. Changes color to show saturation
A-625	316 SS cable hanger use with NPT option for attaching chain for easy pulling out of application

A-297

A-625