USER MANUAL

DIRIS B-30

Multifunction meter and associated current sensors

EN

www.socomec.com/en/diris-b

www.socomec.com/en/diris-b

socomec
Innovative Power Solutions

EN CONTENTS

1. DOCUMENTATION 4
2. HAZARDS AND WARNINGS 5
2.1. Risk of electrocution, burns or explosion 5
2.2. Risk of damaging the device 5
2.3. Liability 6
3. PRELIMINARY OPERATIONS 7
4. PRESENTATION 8
4.1. DIRIS B-30 presentation 8
4.1.1. Range 8
4.1.2. Functions 8
4.1.3. Electrical values measured 10
4.1.4. Dimensions 10
4.2. Optional modules presentation 11
4.2.1. Range 11
4.2.2. Dimensions 11
4.3. Presentation of associated current sensors 12
4.3.1. TE solid-core current sensors 13
4.3.2. TR split-core current sensors 15
4.3.3. TF Rogowski stranded current sensors 16
4.3.4. Adapters for 5A sensors 17
5. MOUNTING 18
5.1. Recommendations and safety 18
5.2. DIRIS B-30 mounting 18
5.2.1. DIN rail mounting 18
5.2.2. Plate mounting 18
5.2.3. Sealing accessory for sensors 19
5.3. Optional modules mounting 19
5.3.1. Optional module mounted on DIRIS B-30 19
5.3.2. Mounting an optional module on an optional module 19
5.4. TE solid-core sensors mounting 20
5.4.1. Mounting accessories 20
5.4.2. DIN rail mounting 20
5.4.3. Plate mounting 22
5.4.4. Mounting on a cable with clamping collar 24
5.4.5. Busbar mounting 25
5.4.6. Sensors assembly 26
5.4.7. Sealing accessories for sensors 26
5.5. TR split-core sensors mounting 27
5.5.1. Cable mounting 27
5.6. TF stranded sensors mounting 27
5.6.1. Casing mounting 27
5.6.2. Cable mounting 28
5.6.3. Busbar mounting 28
5.7. 5A adapter mounting 28
6. CONNECTION 29
6.1. DIRIS B-30 connection 29
6.2. Connecting the optional modules 31
6.2.1. Input/output modules 31
6.2.2. Communication modules 32
6.3. Connecting the current sensors 33
6.3.1. Connection concept 33
6.3.2. Details of the RJ12 connections for each current sensor 33
6.3.3. Connection to the electrical network and to the loads 34
6.3.4. Connection of the functional earth 36

7. STATUS AND AUTO-ADDRESSING LEDS . . . 37
7.1. Status LEDs . . . 37
7.2. Auto-addressing . . . 37
8. COMMUNICATION . . . 39
8.1. General information . . . 39
8.2. RS485 rules . . . 39
8.3. Radio-frequency (RF) rules . . . 40
8.3.1. Installation . . . 41
8.3.2. EC Declaration of Conformity . . . 41
8.4. Communication tables . . . 41
9. CONFIGURATION . . . 42
9.1. Configuration using Easy Config . . . 42
9.1.1. Connection modes . . . 42
9.1.2. Using Easy Config . . . 44
9.1.3. Time setting . . . 46
9.2. Configuration from the DIRIS D-30 remote display . . . 47
9.2.1. Connection mode . . . 47
10. ALARMS . . . 48
10.1. Alarms upon events . . . 48
10.1.1. Electrical parameters . . . 48
10.1.2. Voltage and current unbalance (in a three-phase network) . . . 48
10.1.3. EN 50160 voltage quality events . . . 49
10.1.4. Consumption . . . 49
10.1.5. Analogue inputs . . . 49
10.1.6. Digital inputs . . . 49
10.1.7. Combination of alarms . . . 49
10.2. Setup alarms . . . 50
10.2.1. Current/voltage compatibility . . . 50
10.2.2. Incorrect direction of rotation (three-phase network) . . . 50
10.2.3. Faulty current sensor . . . 50
10.3. Setting up alarms . . . 50
10.3.1. ALARM LED on front . . . 50
10.3.2. Activation of an output . . . 50
10.3.3. Activation of an input . . . 50
10.3.4. RS485 Modbus . . . 51
10.3.5. Display and Webview . . . 51
11. CHARACTERISTICS . . . 52
11.1. DIRIS B-30 characteristics . . . 52
11.1.1. Mechanical characteristics . . . 52
11.1.2. Electrical characteristics . . . 52
11.1.3. Input characteristics . . . 52
11.1.4. Measuring characteristics . . . 52
11.1.5. Communication characteristics . . . 53
11.1.6. Environmental characteristics . . . 53
11.1.7. Electromagnetic compatibility . . . 53
11.1.8. Safety . . . 54
11.1.9. Service life . . . 54
11.2. DIRIS O optional modules characteristics . . . 54
11.3. DIRIS D-30 display characteristics . . . 56
11.3.1. Mechanical characteristics . . . 56
11.3.2. Single device connection . . . 56
11.3.3. Electrical characteristics . . . 56
11.3.4. Environmental characteristics . . . 56
11.4. TE, TR and RF sensors - characteristics . . . 57
12. PERFORMANCE CLASSES . . . 59
12.1. Specification of the characteristics . . . 59
12.2. Evaluation of the power supply quality . . . 60

1. DOCUMENTATION

All documentation relating to the DIRIS B-30 and its associated sensors is available on the SOCOMEC website at the following address:
www.socomec.com/en/diris-b

2. HAZARDS AND WARNINGS

The term “device” used in the following paragraphs encompasses the DIRIS B-30, its optional modules and its associated current sensors (TE, TR or TF).

The assembly, use, servicing and maintenance of this equipment must only be carried out by trained, qualified professionals.

SOCOMEC shall not be held responsible for failure to comply with the instructions in this manual.

2.1. Risk of electrocution, burns or explosion

	Caution: risk of electric shock	Ref. ISO 7000-0434B (2004-01)
	Caution Refer to the accompanying documentation each time this symbol is shown	Ref. ISO 7000-0434B (2004-01)

- This device must only be installed and serviced by qualified personnel who have in-depth knowledge of installing, commissioning and operating the device and who have had appropriate training. He or she should have read and understood the various safety measures and warnings stated in the instructions.
- Before starting any type of work on the device, switch it off and disconnect it from the mains.
- Always use an appropriate voltage detection device to confirm the absence of voltage.
- Replace all devices, doors and covers before connecting the device to the power again.
- Always power the device with the correct rated voltage.
- Install the device in accordance with the recommended installation instructions and in a suitable electrical cabinet.
- Always connect the TE, TR or TF current sensors using the recommended connection cables and observing the maximum prescribed currents.

	Do NOT clamp or pull out NON-INSULATED conductors carrying DANGEROUS VOLTAGE which could cause an electric shock, burn or arc flash. Ref. IEC 61010-2-032

Failure to take these precautions could cause serious injuries or death.

2.2. Risk of damaging the device

	Caution: risk of electric shock	Ref. ISO 7000-0434B (2004-01)
	Caution Refer to the accompanying documentation each time this symbol is shown	Ref. ISO 7000-0434B (2004-01)

To ensure that the device operates correctly, make sure that:

- The device is correctly installed.
- The auxiliary power supply voltage indicated on the device is observed: 110 V - 230 VAC (± 15%).
- The network frequency indicated on the device is observed: 50 or 60 Hz.
- A maximum voltage at the voltage input terminals of 520 VAC phase/phase or 300 VAC phase/neutral is observed.
- Always connect the TE, TR or TF current sensors using the recommended connection cables and observing the maximum prescribed currents.

Failure to respect these precautions could cause damage to the device.

2.3. Liability

- Assembly, connection and use must be carried out in accordance with the installation standards currently in force.
- The device must be installed in accordance with the rules given in this manual.
- Failure to observe the rules for installing this device may compromise the device's intrinsic protection.
- The device must be positioned within an installation which complies with the standards currently in force.
- Any cables which need to be replaced may only be replaced with cables with the correct ratings.

3. PRELIMINARY OPERATIONS

To ensure the safety of personnel and the device, please carefully read the contents of these instructions before installation.

Check the following points as soon as you receive the package containing the device, one or several sensors:

- The packaging is in good condition,
- The device has not been damaged during transportation,
- The device reference number conforms to your order,
- The packaging includes the device fitted with removable terminal blocks and a Quick Start guide.

4. PRESENTATION

4.1. DIRIS B-30 presentation

The DIRIS B-30 is a compact PMD* with a modular format. It is designed for measuring, monitoring (Power Monitoring version) and reporting electrical energy (Power & Energy Monitoring version). The DIRIS B-30 offers a range of functions for measuring voltage, current, power, energy and quality. It can be used to jointly analyse the single-phase and three-phase loads. Add optional modules to manage multi-fluid energy sources (water, gas, etc.) and additional inputs/outputs.

The connection mode for the current sensors allows quick, easy installation. Their automatic identification (type and rating) by the DIRIS B-30 significantly reduces the risk of errors during installation. In addition, this approach, based on combining the sensor with the DIRIS B-30, means the overall accuracy of the DIRIS B-30 + Current sensor measurement chain can be guaranteed for all values measured.

The device is configured from its remote display or via the Easy Config software. The measurements can be accessed via the WEBVIEW web server, available on the G-30, G-40, G-50 and G-60 communication gateways, enabling monitoring of the electrical values (Power Monitoring version) and reporting of the energy data (Power & Energy Monitoring version). The data can also be accessed via the Hyperview energy management software.

The RS485 Modbus or radio-frequency communication modes are offered depending on the reference for the DIRIS B-30. The communication modes can be extended (RS485, PROFIBUS, BACnet) via the addition of optional modules.

The DIRIS B-30 can be integrated as a standalone solution or in a multi-device configuration within an energy management system.

**PMD: Performance Measuring and Monitoring Device in accordance with IEC 61557-12.*

4.1.1. Range

	PMD	**DIRIS B-30 RS**	**DIRIS B-30 RF**
Communication	RS485	•	
	RF		•
		Ref. 4829 0000	Ref. 4829 0002

Accessories

Remote antenna RF 868MHz Height: 210mm	Cable for remote antenna. SMA connector. Length: 3m	Sealing kit. To secure terminals U / I	USB cable for configuration
Ref. 4854 0126	Ref. 4854 0127	Ref. 4829 0049	Ref. 4829 0050

4.1.2. Functions

The DIRIS B-30 boasts numerous functions, including:

- **General measurements**
  - Current, frequency, voltage electrical values
  - Power, power factor, cos phi and tan phi
  - Operation across 4 quadrants
  - Predictive power
  - Overall accuracy of the DIRIS B-30 + Sensors measurement chain guaranteed up to class 0.5 (depending on the current sensor used) for active energy and power in accordance with IEC 61557-12
- **Quality**
  - Current, phase to neutral voltage, phase to phase voltage
  - THD and harmonics up to order 63 for voltage and current
  - Current and voltage imbalance
  - EN50160 events (Uswl, Udip, Uint) and current overloads
- **Data logging**
  - Recording of average electrical values
  - Recording and timestamping of min/max electrical values
- **Metering**
  - Partial and total apparent, reactive and active power
  - Load curves
  - Multi-tariff
- **Alarm**
  - 25 timestamped alarms with boolean combination
- **Connection**
  - 4 current inputs with automatic recognition of the current sensors via a quick connection cable (RJ12 type)
  - Simultaneous management of several single-phase, two-phase and three-phase loads
  - Checking of the connection, detection of the current sensors and auto-configuration of the networks
  - Guarantees the overall accuracy of the DIRIS B-30 + Sensor measurement chain in terms of power and active energy as per IEC 61557-12
- **Inputs / Outputs**
  - 2 logical inputs
  - Optional extension module for logical, analogue and temperature inputs/outputs

Communication

- RS485 or radio frequency (RF) communication (see reference)
- Optional communication module (RS485, PROFIBUS, BACnet)
- Connects to a DIRIS D-30 remote display
- Measurements available in the WEBVIEW web server for the gateway for multi-device applications
- Time synchronisation with the gateway
- Auto-addressing in association with the gateway

4.1.3. Electrical values measured

General	Instant with timestamped Min/Max & Average with timestamped Min/Max
Phase Voltage - Neutral	V1, V2, V3, VN, Vsystem (without min/max)
Phase to phase voltage	U12, U23, U31, Usystem (without min/max)
Frequency	f
Current	I1, I2, I3, IN, Isystem (without min/max)
Total power and power by phase	P, Q, S, P1, P2, P3, Q1, Q2, Q3, S1, S2, S3
Predictive power	P, Q, S
Total power factor and power factor by phase	PF, PF1, PF2, PF3
Cos phi and tan phi	L1, L2, L3 (instantaneous values)

Quality	Instant & Average
Phase to neutral voltage unbalance	Vdir, Vinv, Vhom, Vnba, Vnb
Phase to phase voltage unbalance	Udir, Uinv, Unba, Unb
Current unbalance	Idir, Iinv, Ihom, Inba, Inb
Phase to neutral voltage THD	THDv1, THDv2, THDv3
Phase to phase voltage THD	THDu12, THDu23, THDu31
Current THD	THDi1, THDi2, THDi3,THDiN
Phase to neutral voltage harmonics orders 1 to 63	V1h, V2h, V3h
Phase to phase voltage harmonics orders 1 to 63	U12h, U23h, U31h
Current harmonics orders 1 to 63	I1h, I2h, I3h, INh

Energies	
Total energy	Ea+, Ea-, Er+ (total, lagging, leading), Er- (total, lagging, leading), Eap
Partial energy	Ea+, Ea-, Er+, Er-, Eap

4.1.4. Dimensions

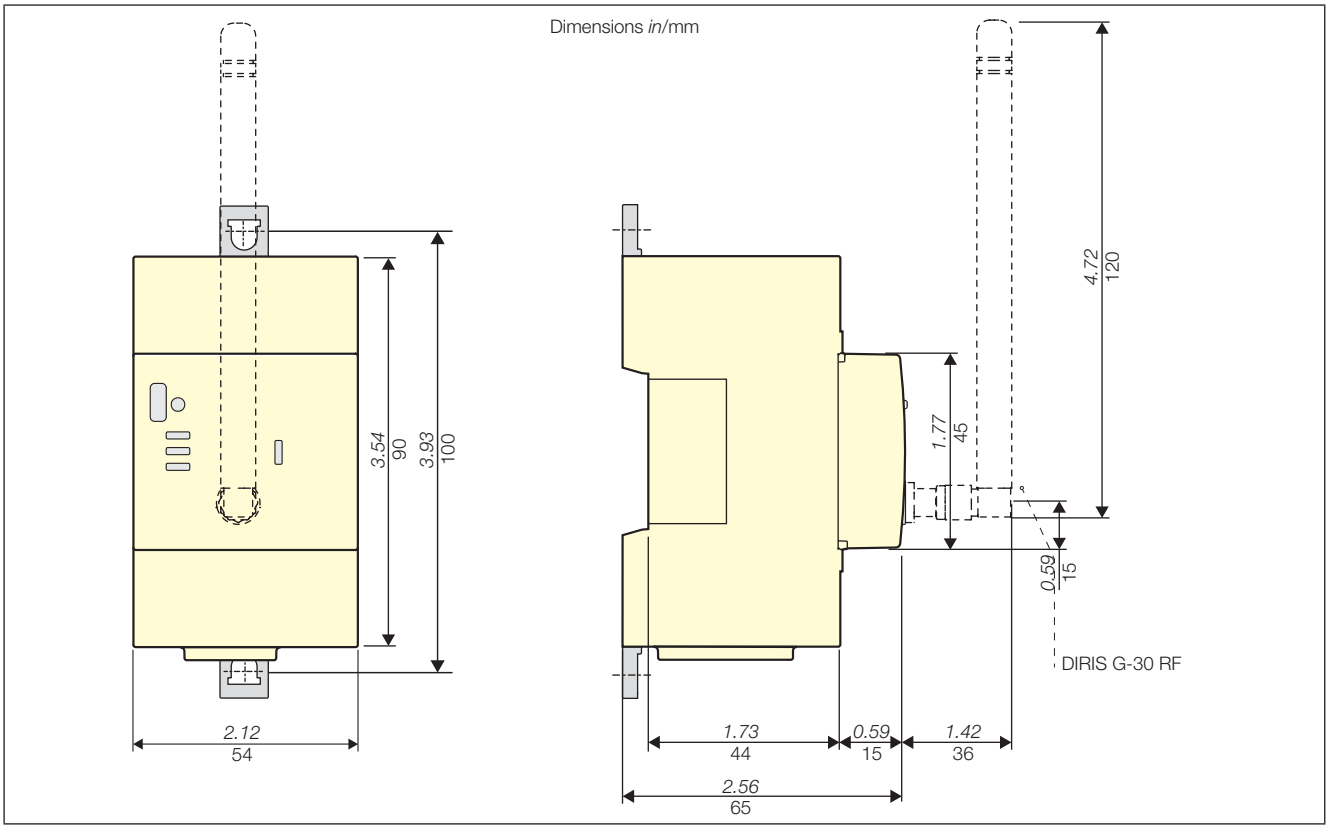

4.2. Optional modules presentation

The optional modules, which have a modular format, are fitted on the DIRIS B-30; they are used to extend its functionalities in terms of inputs/outputs and communication modes.

4.2.1. Range

DIRIS O-iod	**DIRIS O-ioa**	**DIRIS O-it**
Module with 2 digital inputs/outputs	Module with 2 analogue inputs/outputs	Module with 3 temperature inputs
Ref. 4829 0030	Ref. 4829 0031	Ref. 4829 0032

DIRIS O-m	**DIRIS O-p**	**DIRIS O-b/ip**	**DIRIS O-b/mstp**
Modbus RS485 communication module	PROFIBUS DPV1 communication module	BACnet/IP communicationmodule	BACnet MS/TP communication module
Ref. 4829 0033	Ref. 4829 0034	Ref. 4829 0035	Ref. 4829 0036

4.2.2. Dimensions

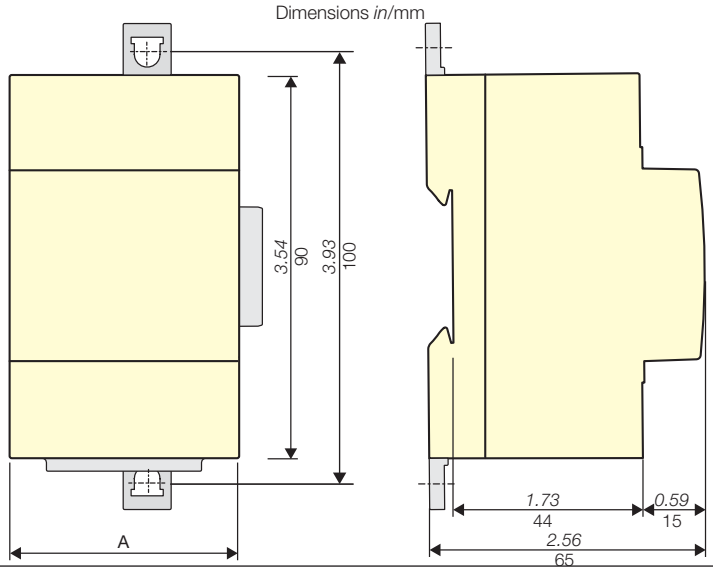

	DIRIS O-iod	DIRIS O-ioa	DIRIS O-it	DIRIS O-m	DIRIS O-p	DIRIS O-b/ip	DIRIS O-b/mstp
A	*1.77in* / 45mm			*2.12in* / 54mm			

4.3. Presentation of associated current sensors

Various types of current sensors are connected to the DIRIS B-30: closed (TE), open (TR) or flexible (TF). The difference between these sensors means they can be adapted to any type of new, existing or temporary installation. They all use a specific link. This type of link provides a quick connection, with no cabling errors. The DIRIS B-30 recognizes the sensor size and type. In addition, combining them means the overall accuracy of the DIRIS B-30 + Current sensor measurement chain can be guaranteed.

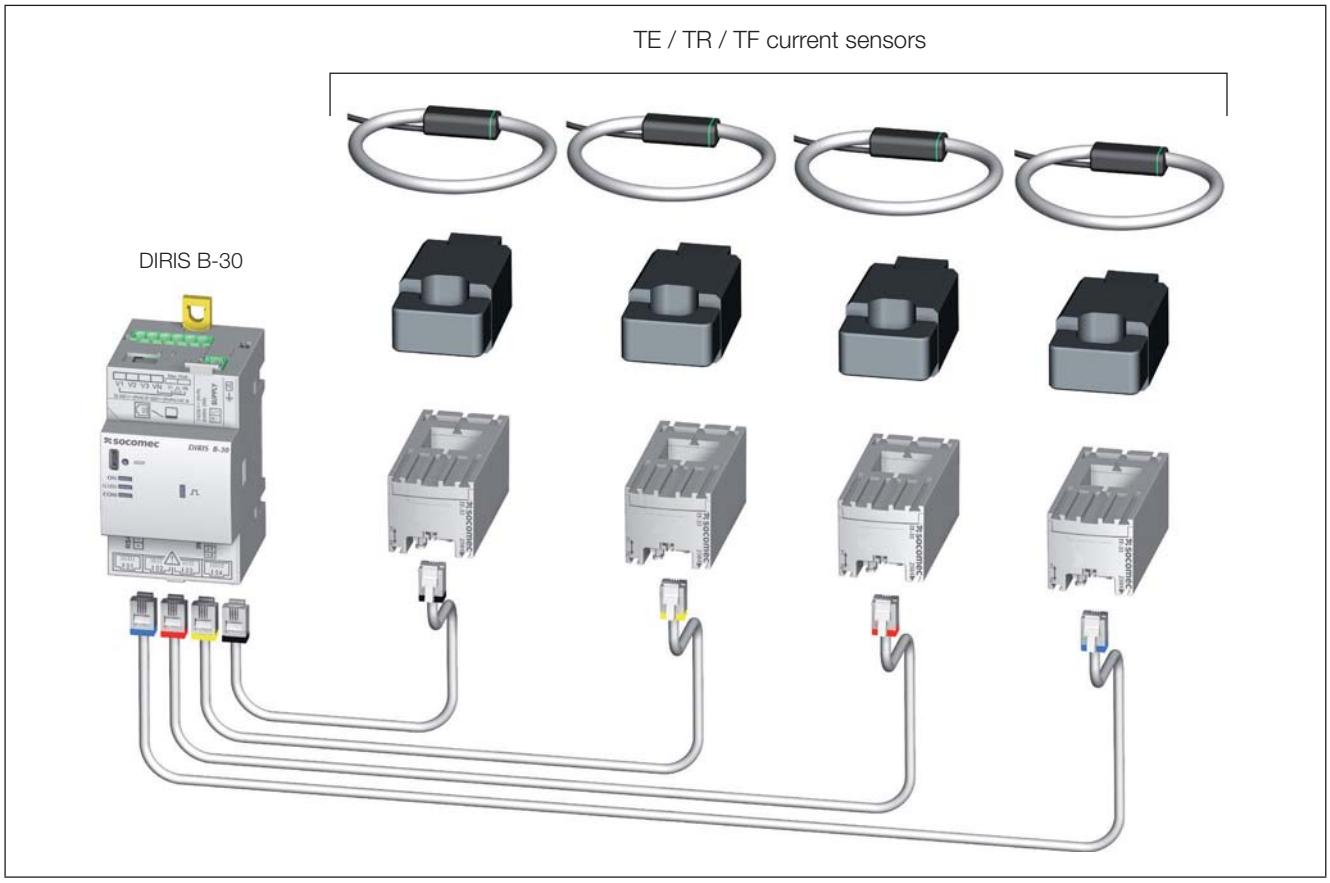

Recommendations:

For connecting the current sensors, use SOCOMEC cables or equivalent only, RJ12 straight cables, twisted pair, unshielded, 300 V cat.III., -40°C / +85°C as per IEC 61010-1 version 3.0.

It is recommended that all the current sensors are installed in the same direction.

Connection cables for current sensors:

RJ12 connection cables	Cable length (m)								
	0.1	0.2	0.3	0.5	1	2	5	10	50 m reel + 50 connectors*
Number of cables	**Reference**	**Reference**	**Reference**	**Reference**	**Reference**	**Reference**	**Reference**	**Reference**	**Reference**
1	-	-	-	-	-	-	4829 0602	4829 0603	4829 0601
3	4829 0580	4829 0581	4829 0582	4829 0595	4829 0583	4829 0584	-	-	-
4				4829 0596	4829 0588	4829 0589	-	-	-
6	4829 0590	4829 0591	4829 0592	4829 0597	4829 0593	4829 0594	-	-	-

* When producing cables, do not exceed a maximum length of 10 metres.

4.3.1. TE solid-core current sensors

The TE solid-core current sensors are used to set up measurement points in a new or existing installation. They are easy to integrate as they are compact and respect the pitch of the circuit breakers. A wide range of accessories are also available for direct fitting on all type of cabling (cable, flexible or rigid busbar) or on a DIN rail support or plate.

Thanks to the specific link, they are recognised by the DIRIS B-30 and the overall accuracy of the measurement chain is guaranteed.

4.3.1.1. Range

	TE-18	**TE-18**	**TE-25**	**TE-35**	**TE-45**	**TE-55**
Pitch	18 mm	18 mm	25 mm	35 mm	45 mm	55 mm
Nominal current range In	5 - 20 A	25 - 63 A	40 - 160 A	63 - 250 A	160 - 630 A	400 - 1000 A
Maximum I	24 A	75.6 A	192 A	300 A	756 A	1200 A
Reference	4829 0500	4829 0501	4829 0502	4829 0503	4829 0504	4829 0505

	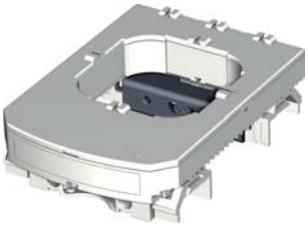
	TE-90
Pitch	90 mm
Nominal current range In	600 - 2000 A
Maximum I	2400 A
Reference	4829 0506

4.3.1.2. Dimensions

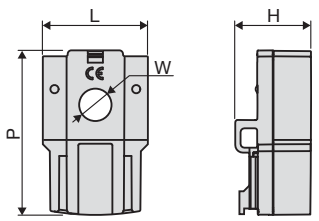

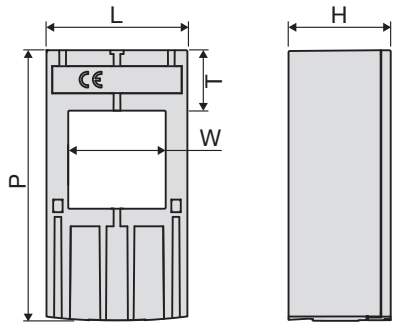

Dimensions *in*/mm	**TE-18**	**TE-25**	**TE-35**	**TE-45**	**TE-55**
Pitch	*0.71* 18 (staggered assembly)	*0.98* 25	*1.37* 35	*1.77* 45	*2.16* 55
LxHxD	*1.10 x 0.79 x 1.77* 28 x 20 x 45	*0.98 x 1.28 x 2.56* 25 x 32.5 x 65	*1.37 x 1.28 x 2.79* 35 x 32.5 x 71	*1.77 x 1.28 x 3.38* 45 x 32.5 x 86	*2.16 x 1.28 x 3.93* 55 x 32.5 x 100
Aperture (W)	*ø 0.33* ø 8.4	*0.53 x 0.53* 13.5 x 13.5	*0.82 x 0.82* 21 x 21	*1.22 x 1.22* 31 x 31	*1.61 x 1.61* 41 x 41
(T)	-	*0.69* 17.5	*0.69* 17.5	*0.77* 19.5	*0.85* 21.5

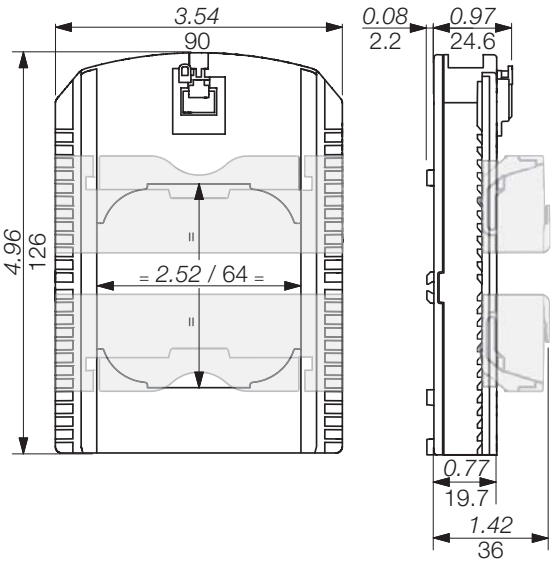

Dimensions *in*/mm **TE-90**

4.3.2. TR split-core current sensors

The TR split-core current sensors are used to set up measurement points in a new or existing installation without interfering with its cabling. Thanks to the specific link, they are recognised by the DIRIS B-30 and the overall accuracy of the measurement chain is guaranteed.

4.3.2.1. Range

Four models are available from 25A to 600A to analyse several types of loads.

			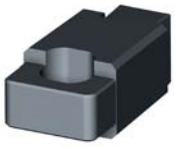	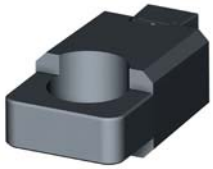
	TR-10	**TR-16**	**TR-24**	**TR-36**
Cable passage diameter	ø10mm	ø16mm	ø24mm	ø36mm
Nominal current range In	25 - 75A	32 - 100A	63 - 200A	200 - 600A
Maximum I	90A	120A	240A	720A
Reference	4829 0551	4829 0552	4829 0553	4829 0554

4.3.2.2. Dimensions

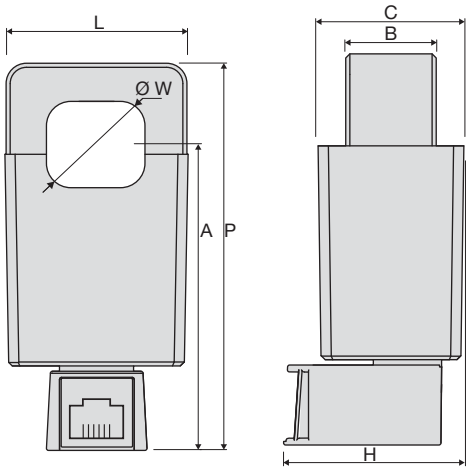

Dimensions *in*/mm	**TR-10**	**TR-16**	**TR-24**	**TR-36**
LxHxD	*0.98 x 1.54 x 2.79* 25 x 39 x 71	*1.18 x 1.65 x 2.91* 30 x 42 x 74	*1.77 x 1.73 x 3.74* 45 x 44 x 95	*2.24 x 1.65 x 4.37* 57 x 42 x 111
W	*0.39* 10	*0.63* 16	*0.94* 24	*1.42* 36
A	*2.28* 58	*2.40* 61	*2.83* 72	*3.23* 82
B	*0.57* 14.5	*0.75* 19	*0.87* 22	*0.87* 22
C	*1.02* 26	*1.22* 31	*1.34* 34	*1.59* 40.5

4.3.3. TF Rogowski stranded current sensors

The TF flexible current sensors use the Rogowski principle which enables a large current range to be covered without saturation. Flexible design and easy-opening system for quick installation in electrical enclosures. They are particularly suitable for adding measuring points in existing installations and for test campaigns.

4.3.3.1. Range

Three models are available, covering a large current range up to 6000 A with openings of different shapes and sizes.

An integrator will be required to shape the current signal. With its specific link you can connect it directly to the DIRIS Digiware, which can identify it.

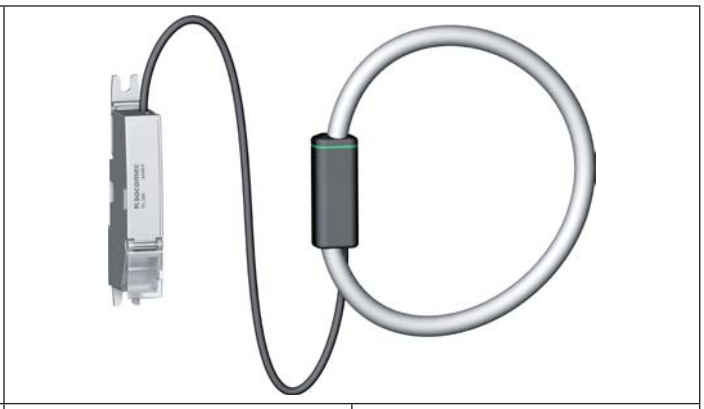

	TF-55	TF-120	TF-300
Loop length	55 mm	120 mm	300 mm
Nominal current range In	150 - 600 A	500 - 2000 A	1600 - 6000 A
Reference	4829 0570	4829 0571	4829 0572

4.3.3.2. Dimensions

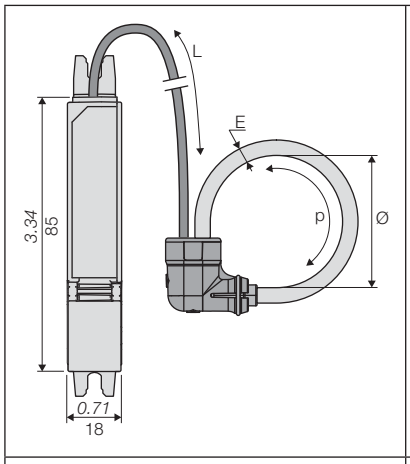

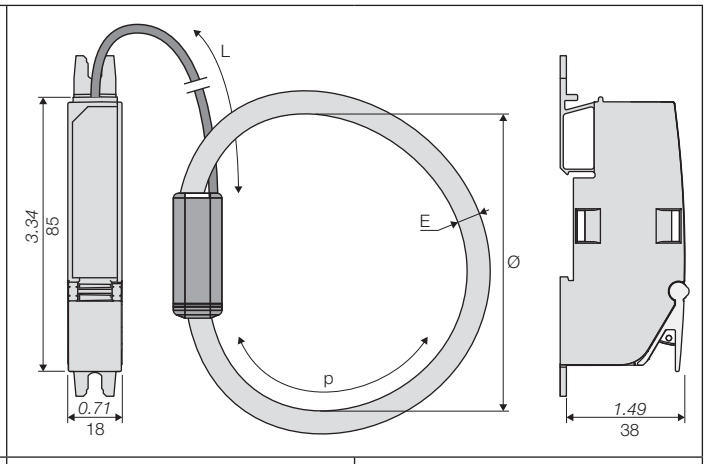

Dimensions *in*/mm	TF-55	TF-120	TF-300
Diameter	*2.16* 55	*4.72* 120	*11.81* 300
p	*7.16* 182	*14.80* 376	*37.08* 942
T	*0.23* 6	*0.43* 11	*0.43* 11
L	*59.05* 1500		

4.3.4. Adapters for 5A sensors

The adapter lets you use a standard sensor supplying a 1A or 5A current to the secondary sensor. When this kind of sensor is used, the overall accuracy of the DIRIS B-30 + sensor is not guaranteed and will depend on the accuracy of the associated sensor (see standard "ImoonEC 61557-12 annex D" for more information).
The primary current is max. 10000A / 5A or 2000A / 1A.

4.3.4.1. Range

	5A adapter
I nom.	5A
I max.	6A
Reference	4829 0599

4.3.4.2. Dimensions

	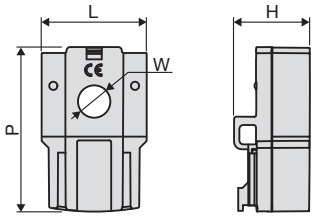
Dimensions *in*/mm	**5A adapter**
LxHxD	*1.10 x 0.79 x 1.77* 28 x 20 x 45
Aperture (W)	*ø 0.33* ø 8.4

5. MOUNTING

The following paragraphs describe the installation of the DIRIS B-30, the optional modules and the associated sensors.

5.1. Recommendations and safety

Refer to the safety instructions (section “2. Hazards and warnings”, page 5)

5.2. DIRIS B-30 mounting

5.2.1. DIN rail mounting

Mounting	Removal
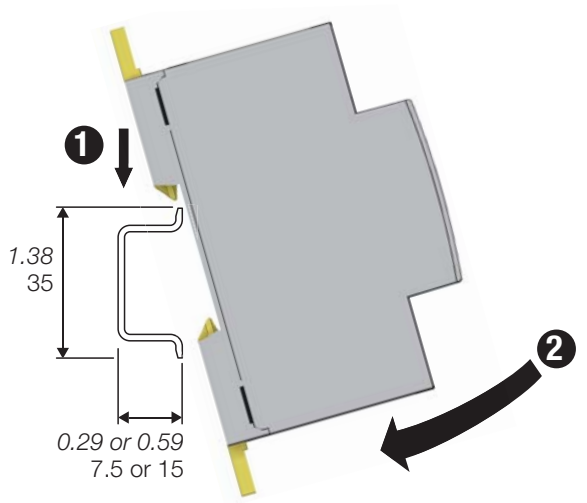	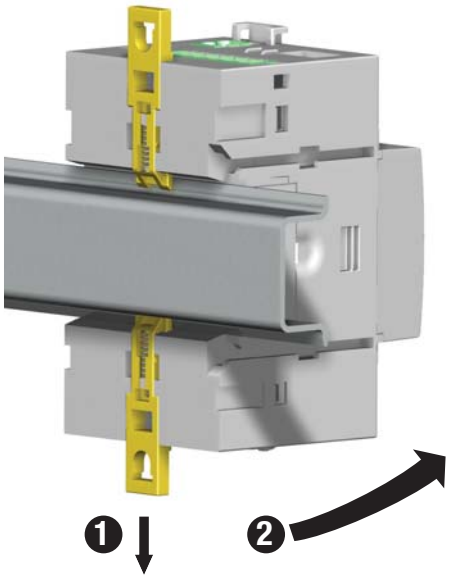

5.2.2. Plate mounting

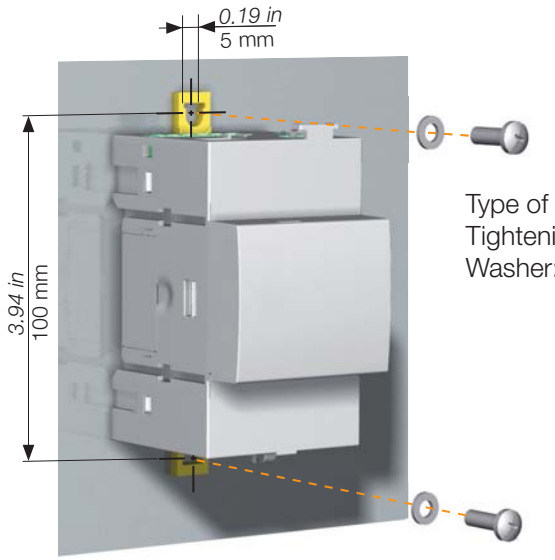

Type of screw: M4
Tightening torque: 0.5 Nm
Washer: maximum Ø *0.47in*/12mm

5.2.3. Sealing accessory for sensors

Reference	Sealing case for terminal
4829 0600	x20

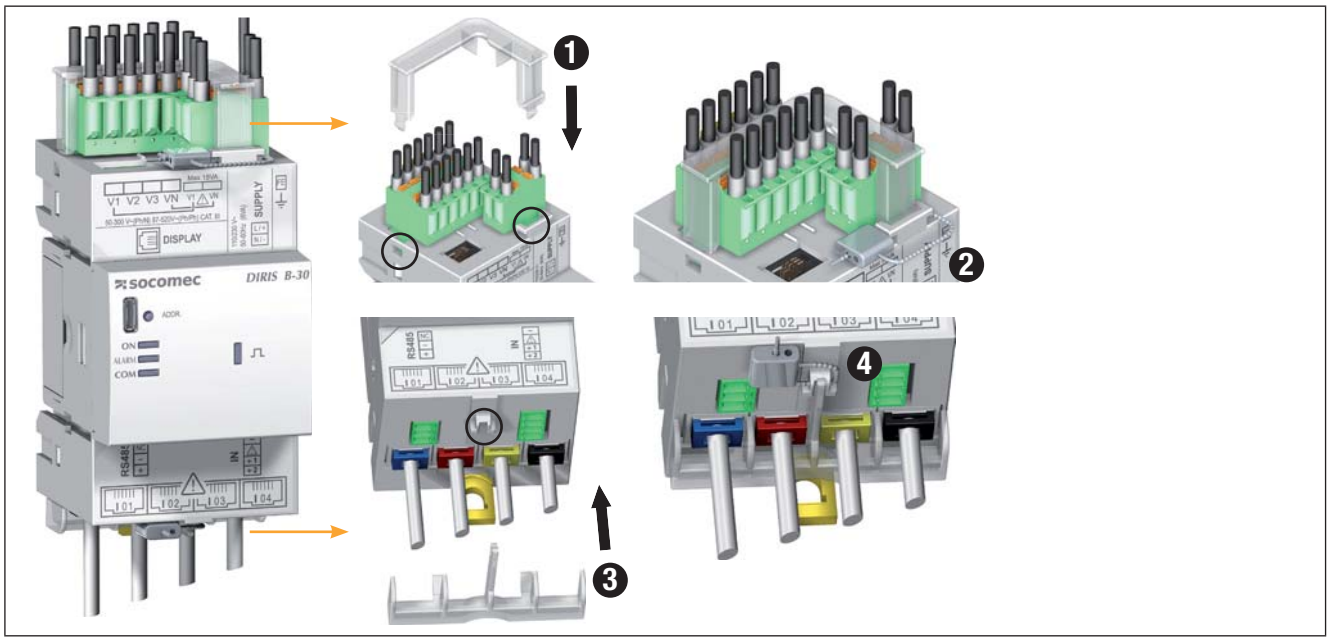

5.3. Optional modules mounting

5.3.1. Optional module mounted on DIRIS B-30

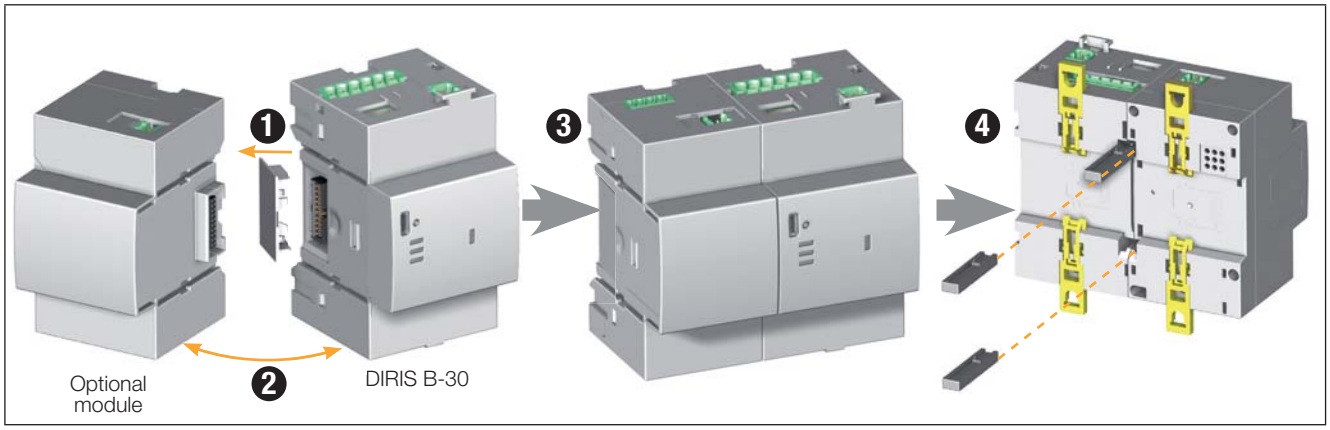

5.3.2. Mounting an optional module on an optional module

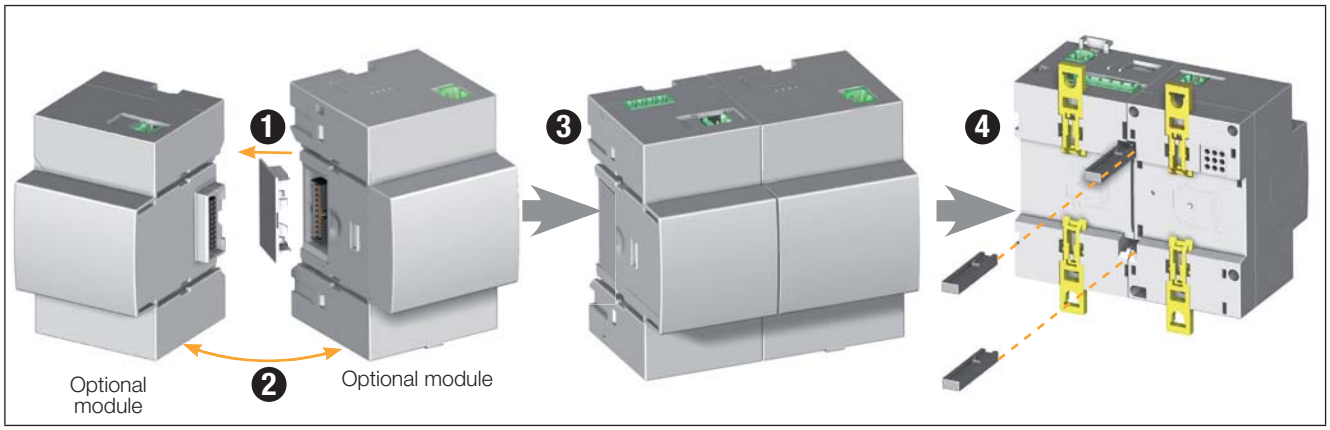

The following guidelines for installation must be observed:

- A maximum of 4 optional modules can be installed on the DIRIS B-30
- One single temperature module (DIRIS O-it) may be used.
- One single RS485 communication module (DIRIS O-m) may be used and must always be positioned last during installation
- The DIRIS B-30 assembly with its optional modules must be installed on a DIN rail or base plate.

5.4. TE solid-core sensors mounting

5.4.1. Mounting accessories

The list of mounting accessories supplied with the sensors are listed below:

Reference		**Pitch**	DIN rail and plate mounting	DIN rail mounting	Plate mounting	Busbar mounting
4829 0500 4829 0501	**TE-18**	**18 mm**	x1			
4829 0502	**TE-25**	**25 mm**		x2	x4	
4829 0503	**TE-35**	**35 mm**		x2	x4	x2
4829 0504	**TE-45**	**45 mm**		x2	x4	x2
4829 0505	**TE-55**	**55 mm**		x2	x4	x2
4829 0506	**TE-90**	**90 mm**	x2		x6	

5.4.2. DIN rail mounting

TE-18 -> TE-55

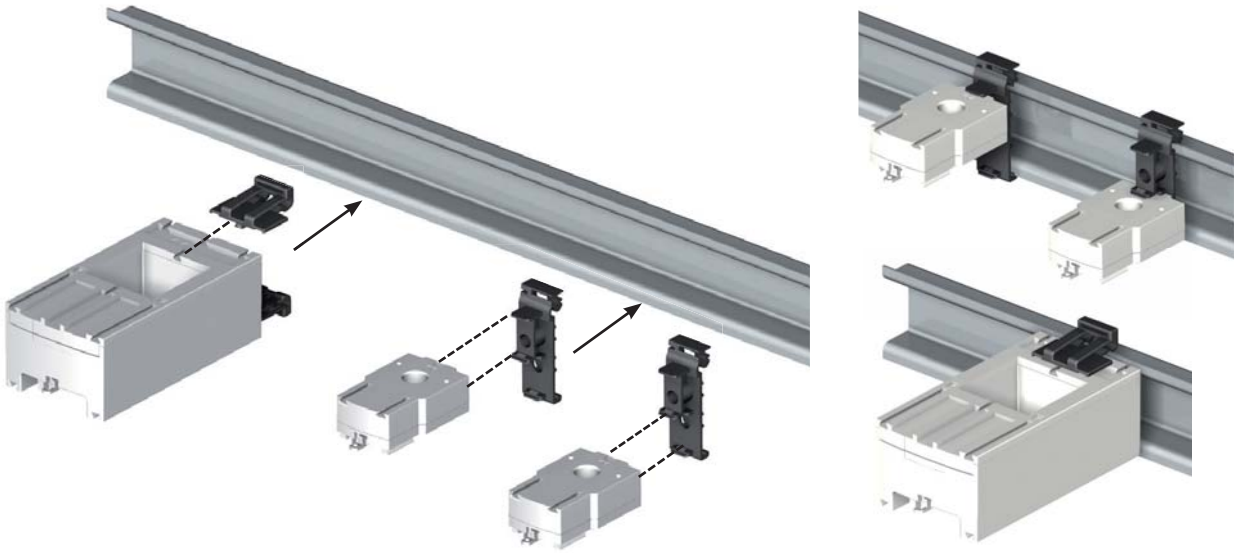

TE-90

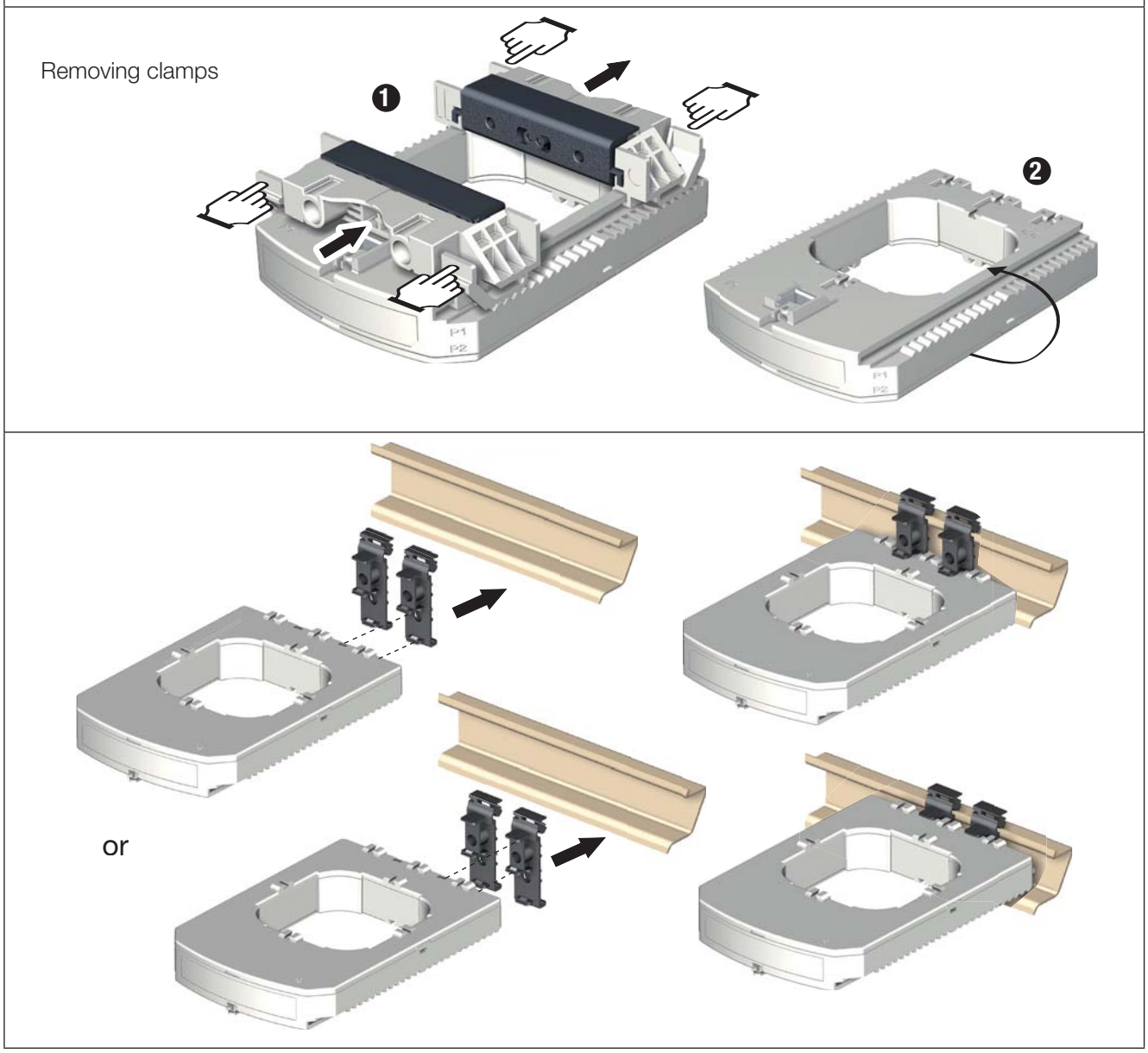

NB: Install sensor TE-90 to the DIN rail to make it easier to install. This is a temporary installation.
Use the clamps to install the TE-90 sensors on the DIN rail.

5.4.3. Plate mounting

TE-18

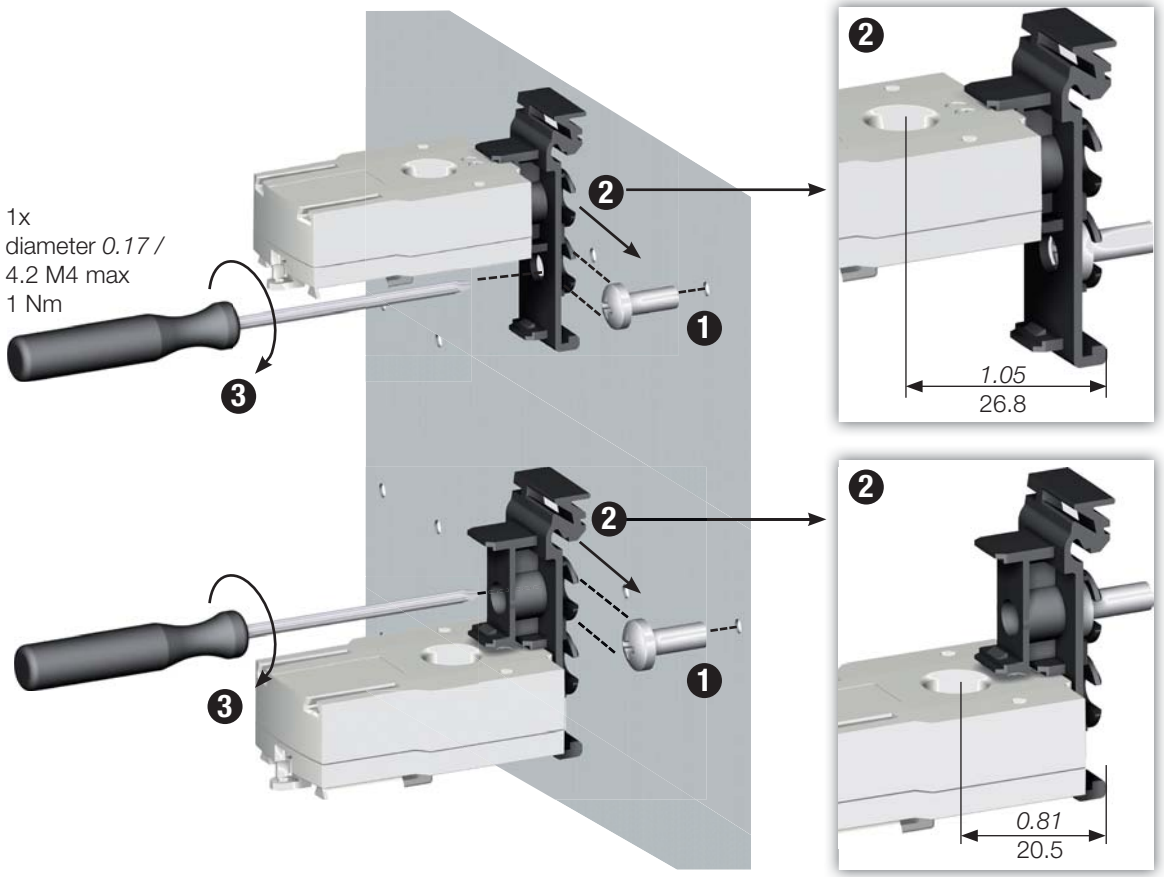

TE-25 - > TE-55

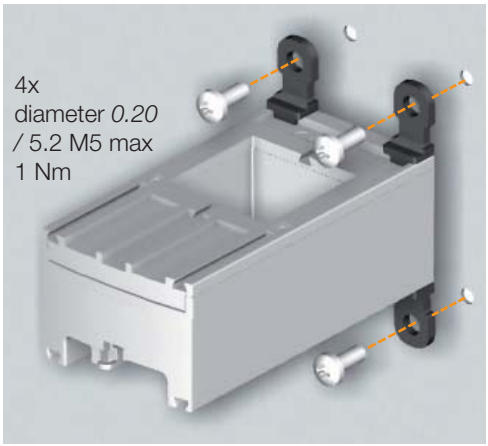

TE-90

Removing clamps

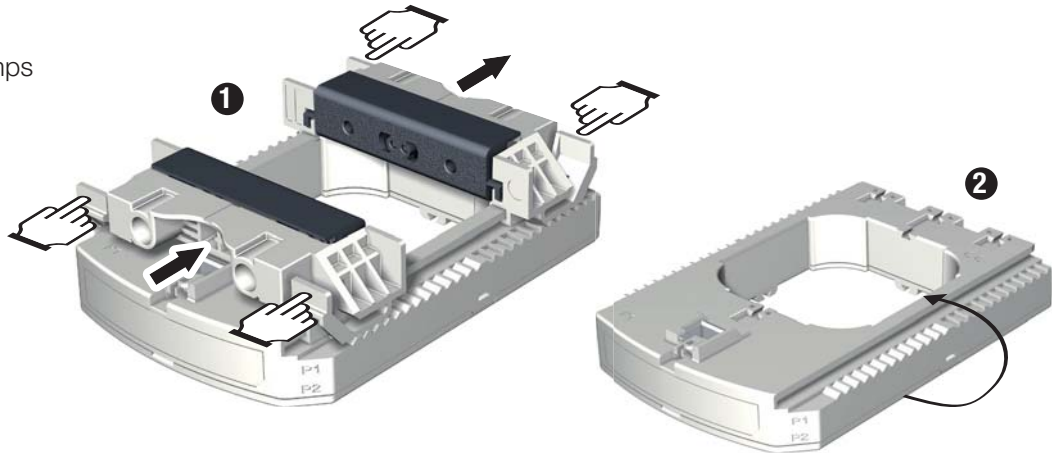

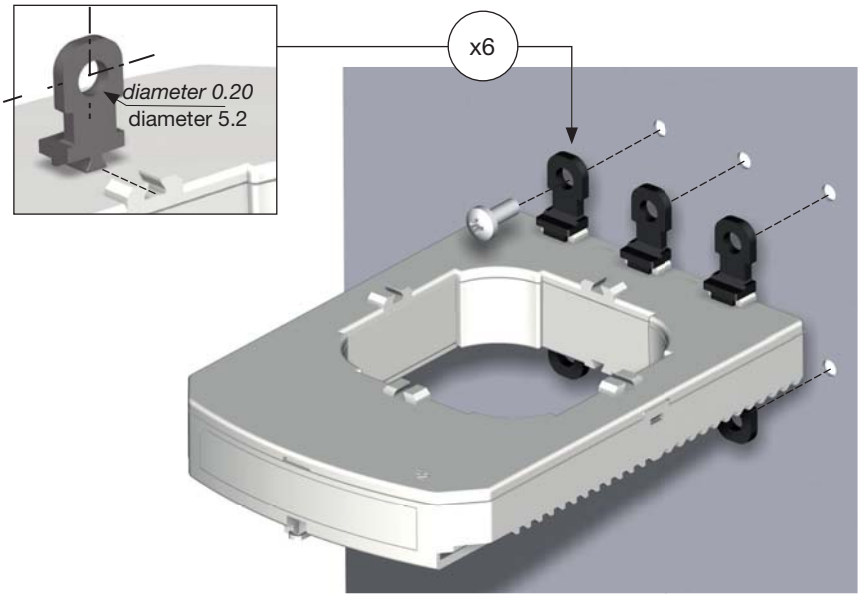

NB: Use the clamps to install the TE-90 sensors on the board.

5.4.4. Mounting on a cable with clamping collar

TE-18	TE-25 - > TE-55
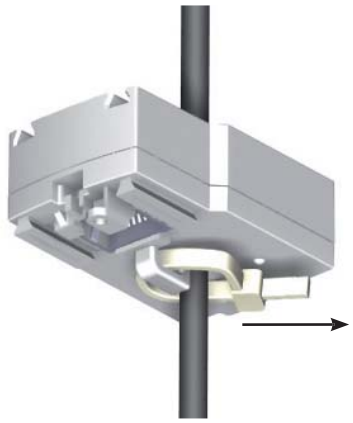	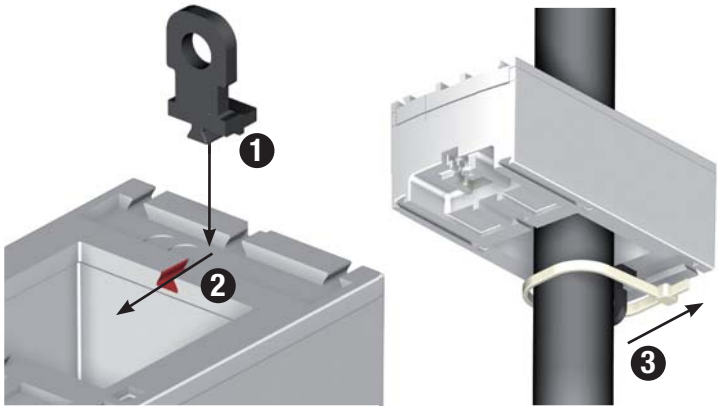

TE-90

Removing clamps

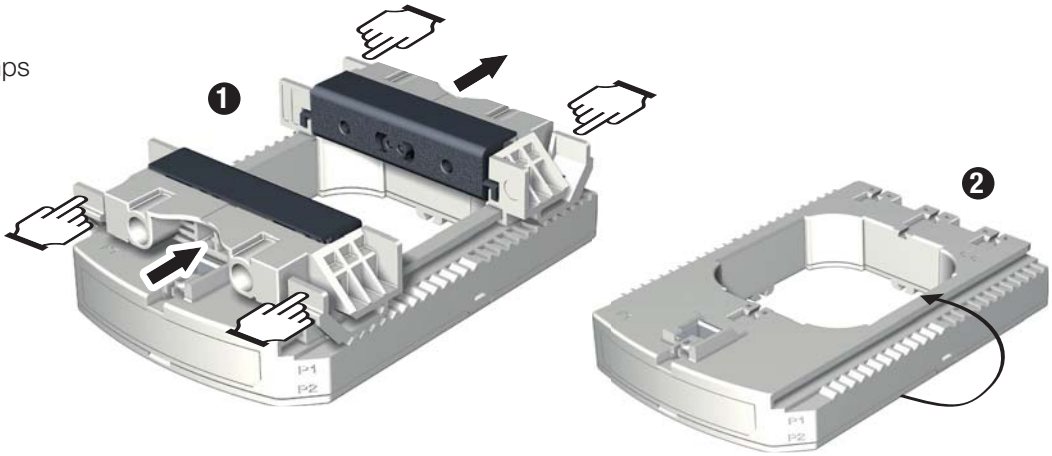

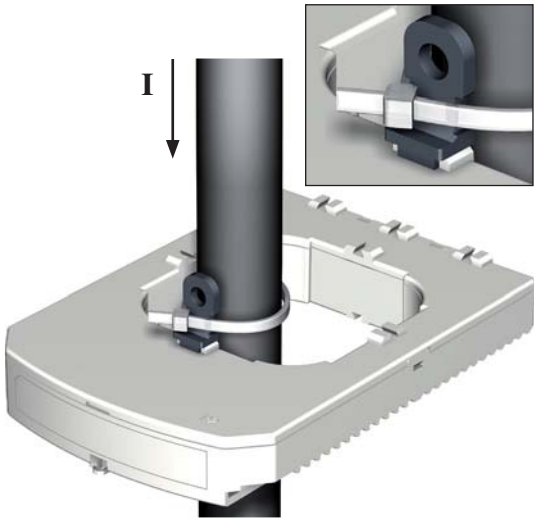

NB: Use the clamps to install the TE-90 sensors on a cable with clamping collar.

	Do NOT clamp or pull out NON-INSULATED conductors carrying DANGEROUS VOLTAGE which could cause an electric shock, burn or arc flash. Ref. IEC 61010-2-032

5.4.5. Busbar mounting

TE-35 - > TE-55

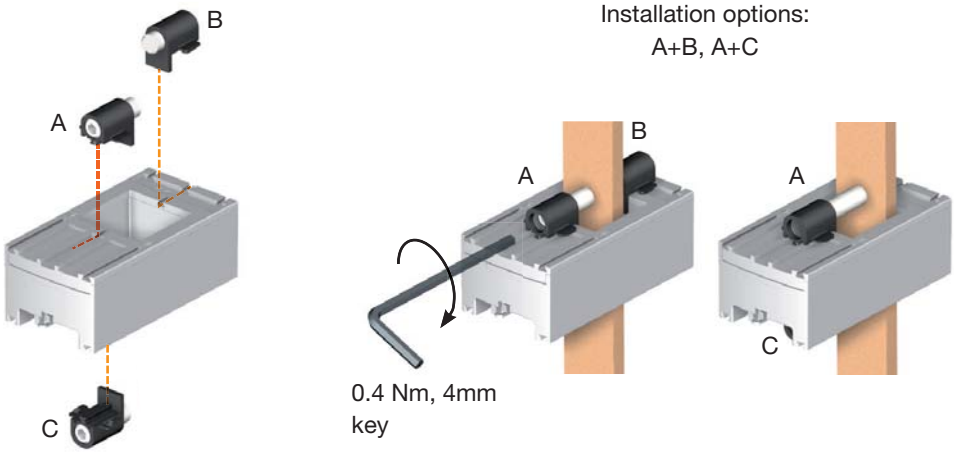

TE-90

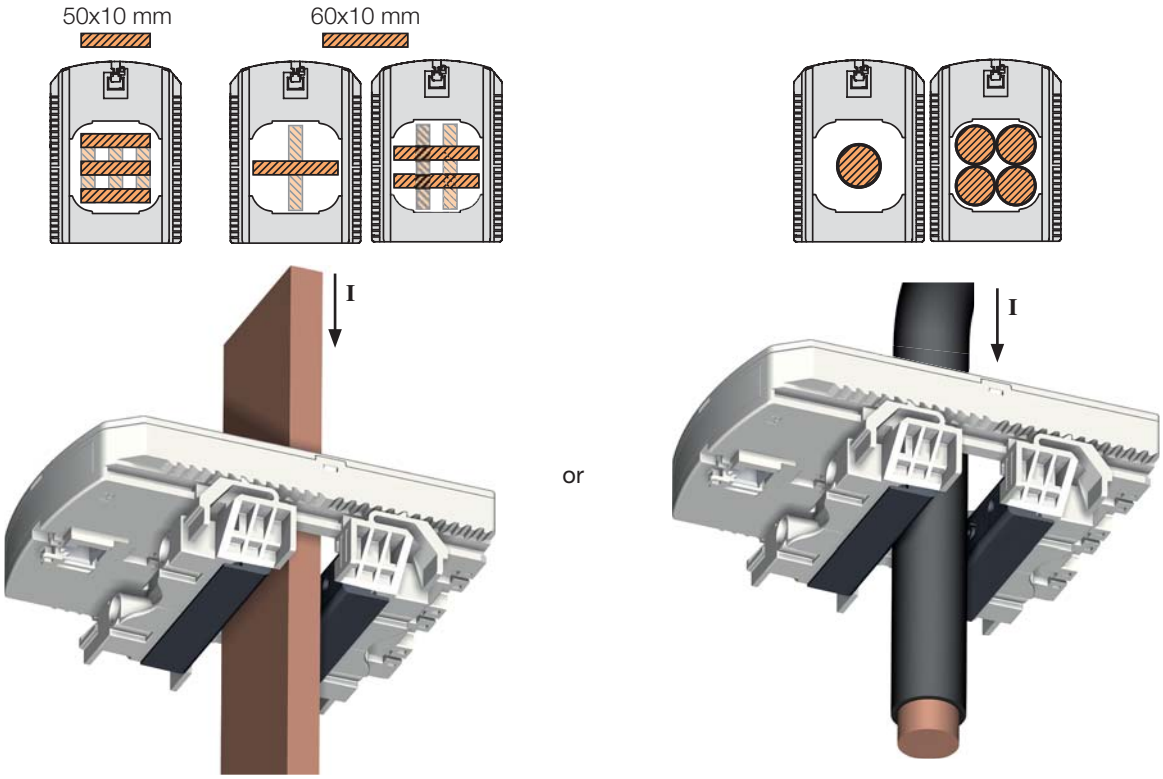

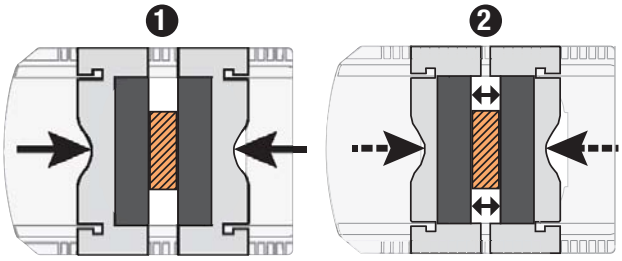

Tighten the jaws on both sides of the cable by applying pressure.
The jaws must be perpendicular to the holding notches.

	Do NOT clamp or pull out NON-INSULATED conductors carrying DANGEROUS VOLTAGE which could cause an electric shock, burn or arc flash. Ref. IEC 61010-2-032

5.4.6. Sensors assembly

TE-18	TE-25 - > TE-55	TE-35 - > TE-55
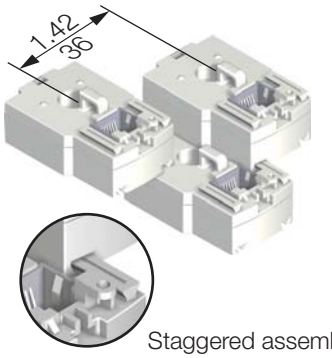 Staggered assembly	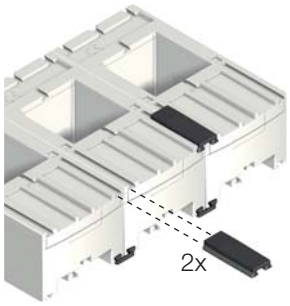 Linear mounting	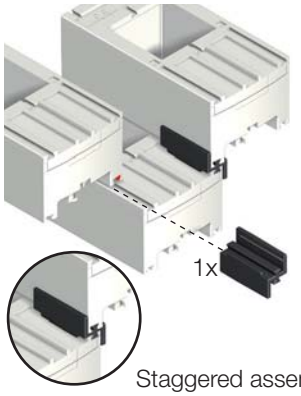 Staggered assembly

Mounting accessories for sensor combination:

Reference	Linear assembly	Staggered assembly
4829 0598	x30	

These accessories must be ordered separately.

5.4.7. Sealing accessories for sensors

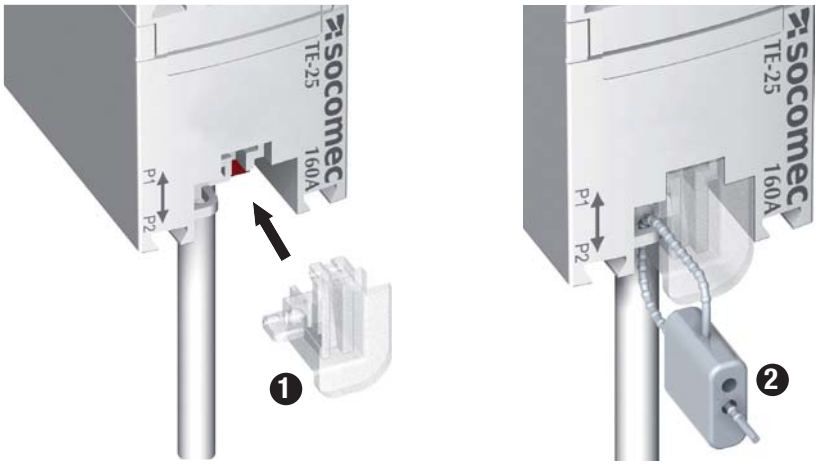

Reference	Sealing case for terminal
4829 0600	x20

These accessories must be ordered separately.

5.5. TR split-core sensors mounting

5.5.1. Cable mounting

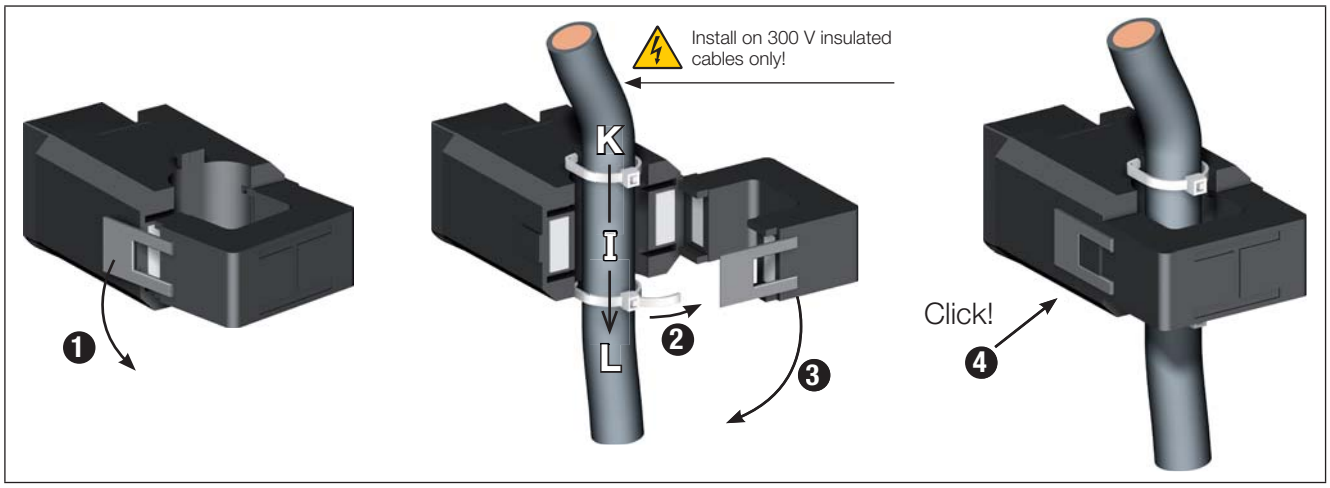

	Do NOT clamp or pull out NON-INSULATED conductors carrying DANGEROUS VOLTAGE which could cause an electric shock, burn or arc flash. Ref. IEC 61010-2-032

	Before closing the TR sensor, check that the air gap is clean (no contamination or corrosion)

5.6. TF stranded sensors mounting

5.6.1. Casing mounting

DIN rail	Plate	Frame
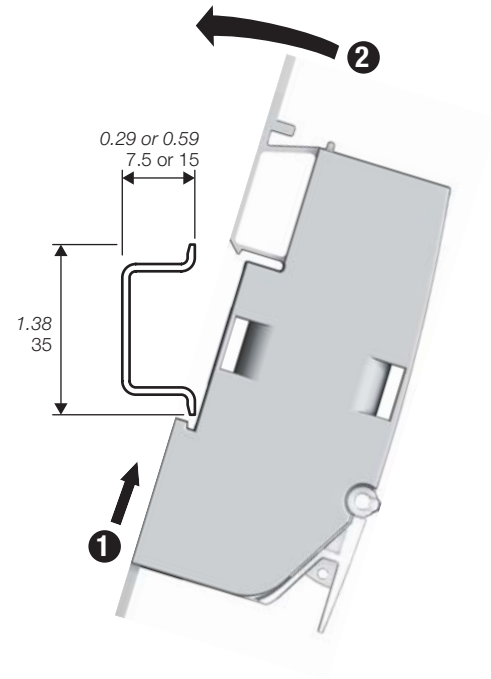	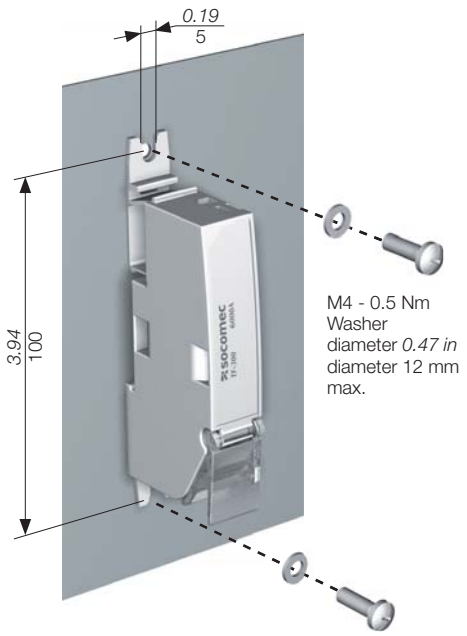	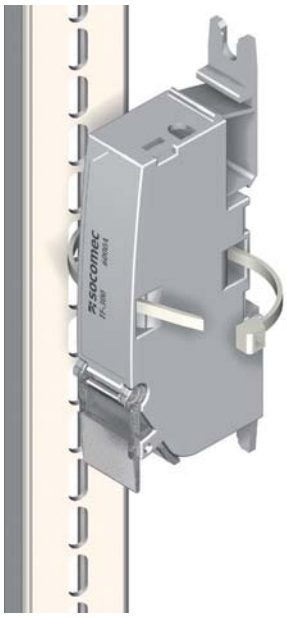

5.6.2. Cable mounting

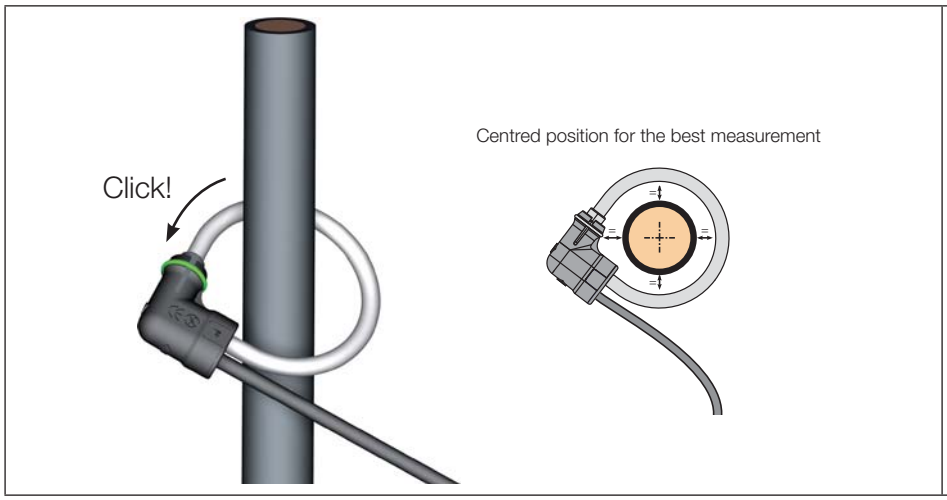

Do NOT clamp or pull out NON-INSULATED conductors carrying DANGEROUS VOLTAGE which could cause an electric shock, burn or arc flash.

Ref. IEC 61010-2-032

5.6.3. Busbar mounting

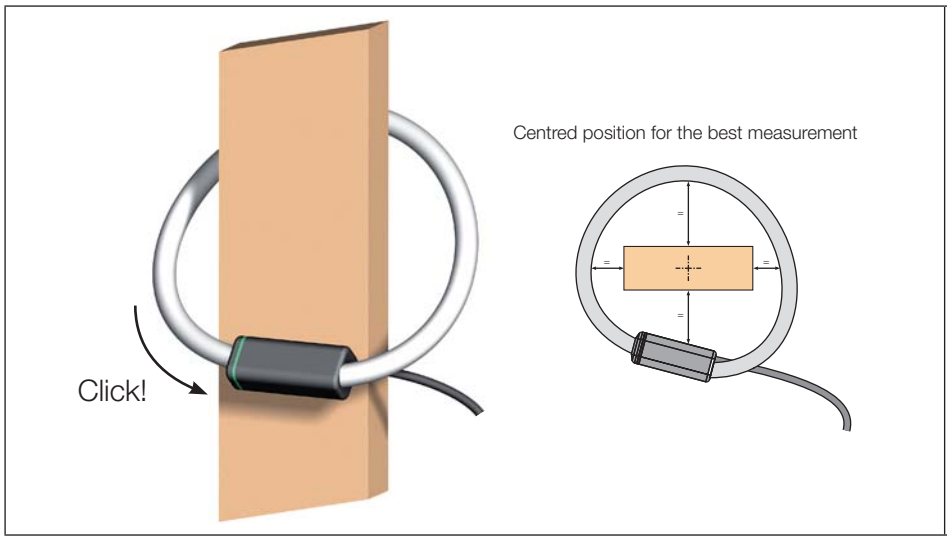

Do NOT clamp or pull out NON-INSULATED conductors carrying DANGEROUS VOLTAGE which could cause an electric shock, burn or arc flash.

Ref. IEC 61010-2-032

5.7. 5A adapter mounting

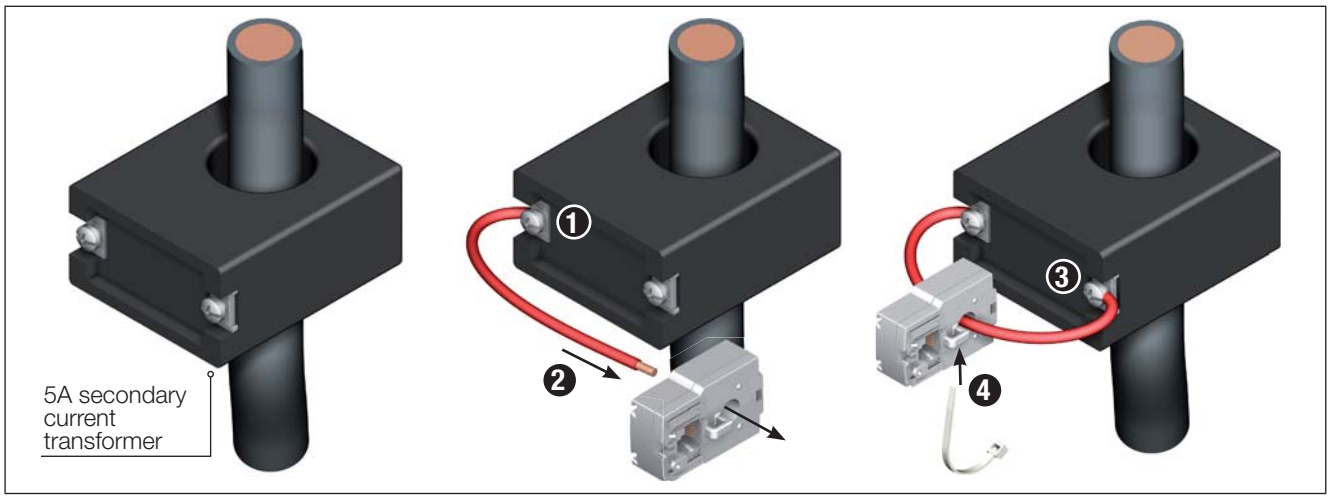

Do NOT clamp or pull out NON-INSULATED conductors carrying DANGEROUS VOLTAGE which could cause an electric shock, burn or arc flash.
Ref. IEC 61010-2-032

6. CONNECTION

6.1. DIRIS B-30 connection

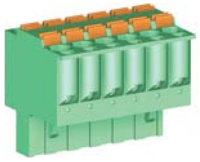

2x 6 positions - spring-cage
0.2 mm² -> 2.5 mm² solid
0.25 mm² -> 1.5 mm² stranded cable with ferrule
10 mm

Voltage inputs
50-300 VAC (Ph/N)
87-520 VAC (Ph/Ph)

2x 2 positions - spring-cage
0.2 mm² -> 2.5 mm² solid
0.25 mm² -> 1.5 mm² stranded cable with ferrule
10 mm

Auxiliary power supply
110-230 VAC

Use a SOCOMEC cable for the display, as follows: RJ9, straight-through, twisted pair, unshielded, 300 V cat.III. -40 / +85°C in accordance with IEC 61010-1 version 3.0.

Display DIRIS D

(*)

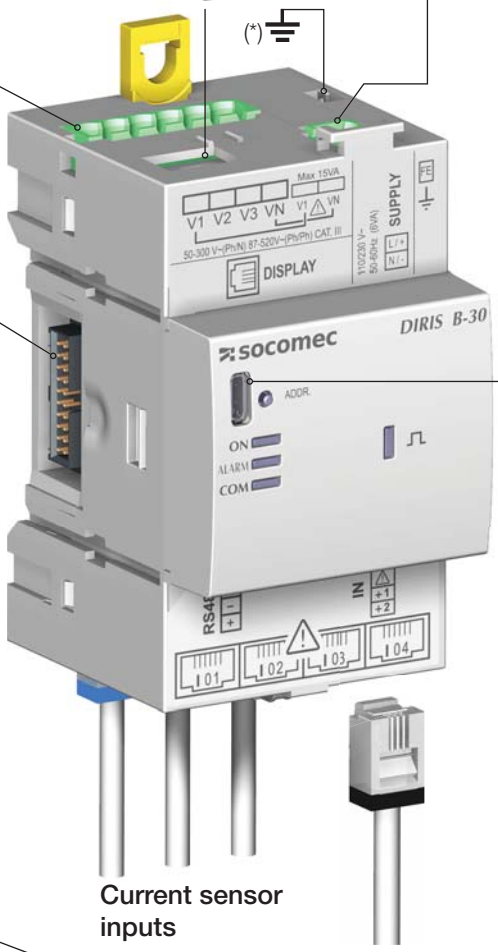

Optional modules

- Inputs/Outputs:
  - O-iod
  - O-ioa
  - O-it
- Communication:
  - O-m
  - O-p
  - O-b/ip
  - O-b/mstp

USB
Type B micro USB

Current sensor inputs

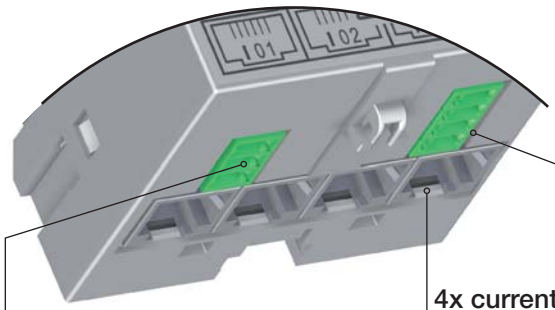

RS485 (ref. 4829 0000)

3 positions - screw connection, 0.25 Nm max.
solid 0.14 mm² -> 1.5 mm²
stranded 0.14 mm² -> 1.5 mm²
7 mm

4x current sensor inputs (**)

2 digital inputs

4 positions - screw connection, 0.25 Nm max.
solid 0.14 mm² -> 1.5 mm²
stranded 0.14 mm² -> 1.5 mm²
7 mm

(*) Earth must not be used in a neutral IT system
(**) Always connect input I01 first.

Current measurement

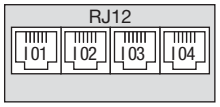

Always connect input I01 first.

Voltage and auxiliary power supply measurement

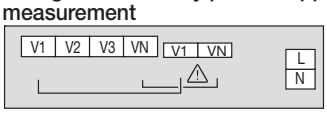

Self-powered

Easy connection of the power supply from the measurement terminal (specific terminals)

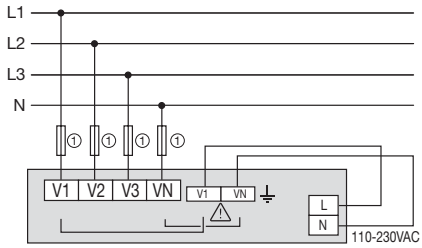

1. 0.5 A gG / 0.5 A class CC fuses.

Separated power supply

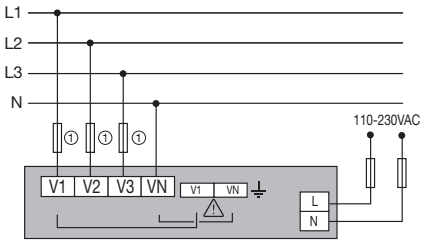

1. 0.5 A gG / 0.5 A class CC fuses.

2 inputs supplied by the device

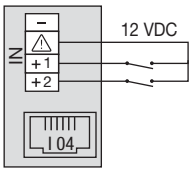

2 inputs with external power supply

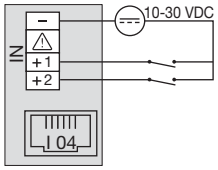

RS485

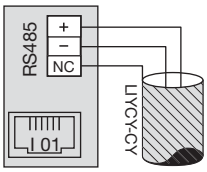

RJ9 for DIRIS D-30

(Self-powered and data)

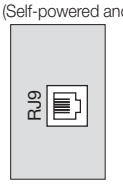

Power supply of optional modules

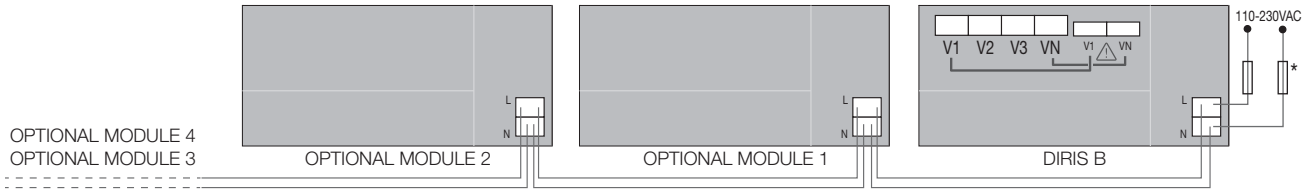

*0.5 A gG / BS 88 2A gG / 0.5 A class CC fuse

6.2. Connecting the optional modules

6.2.1. Input/output modules

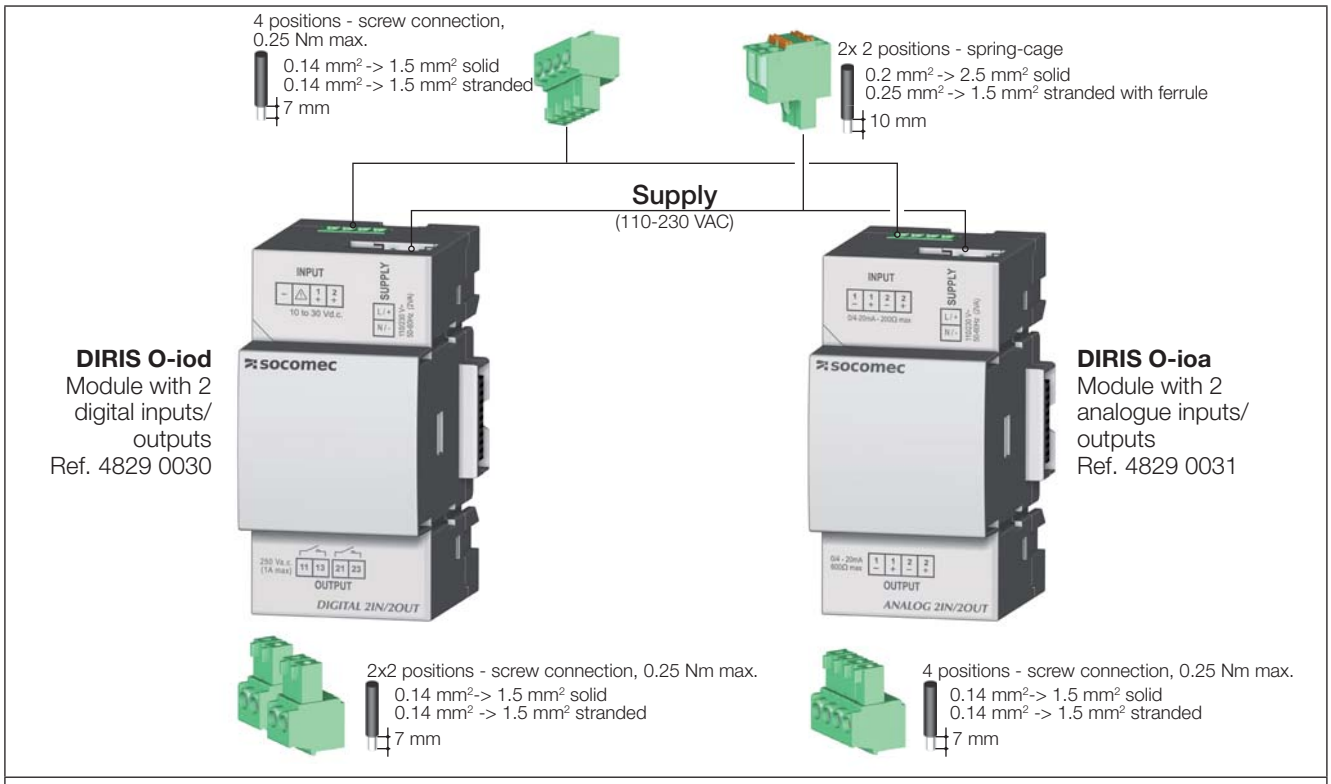

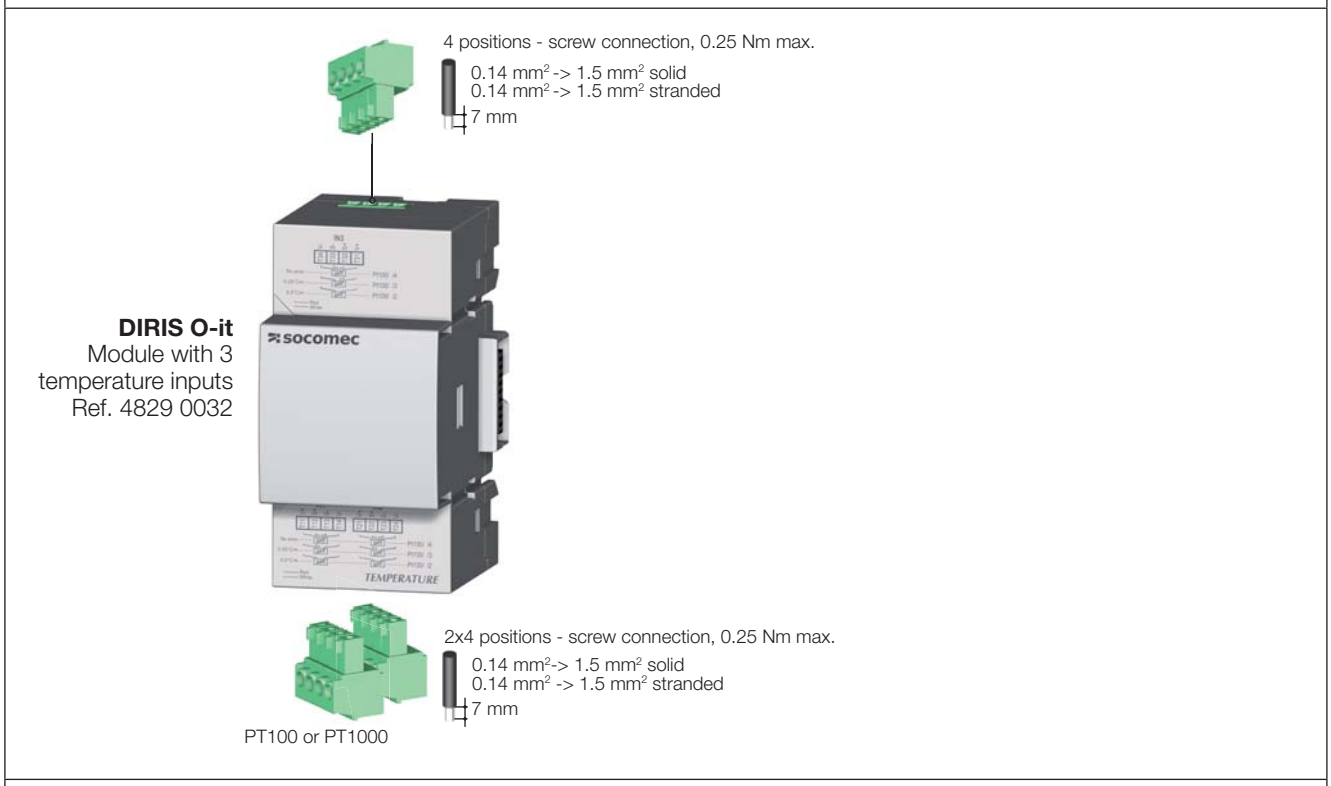

6.2.2. Communication modules

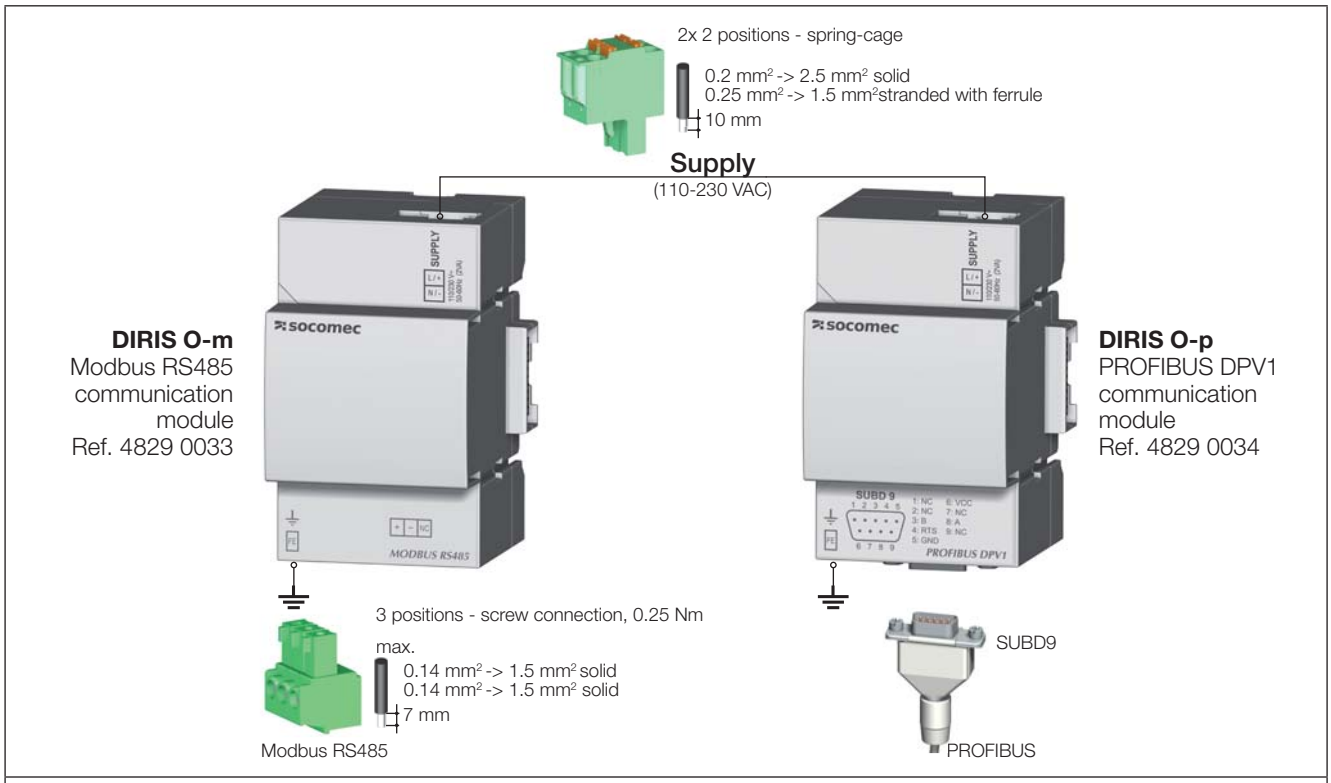

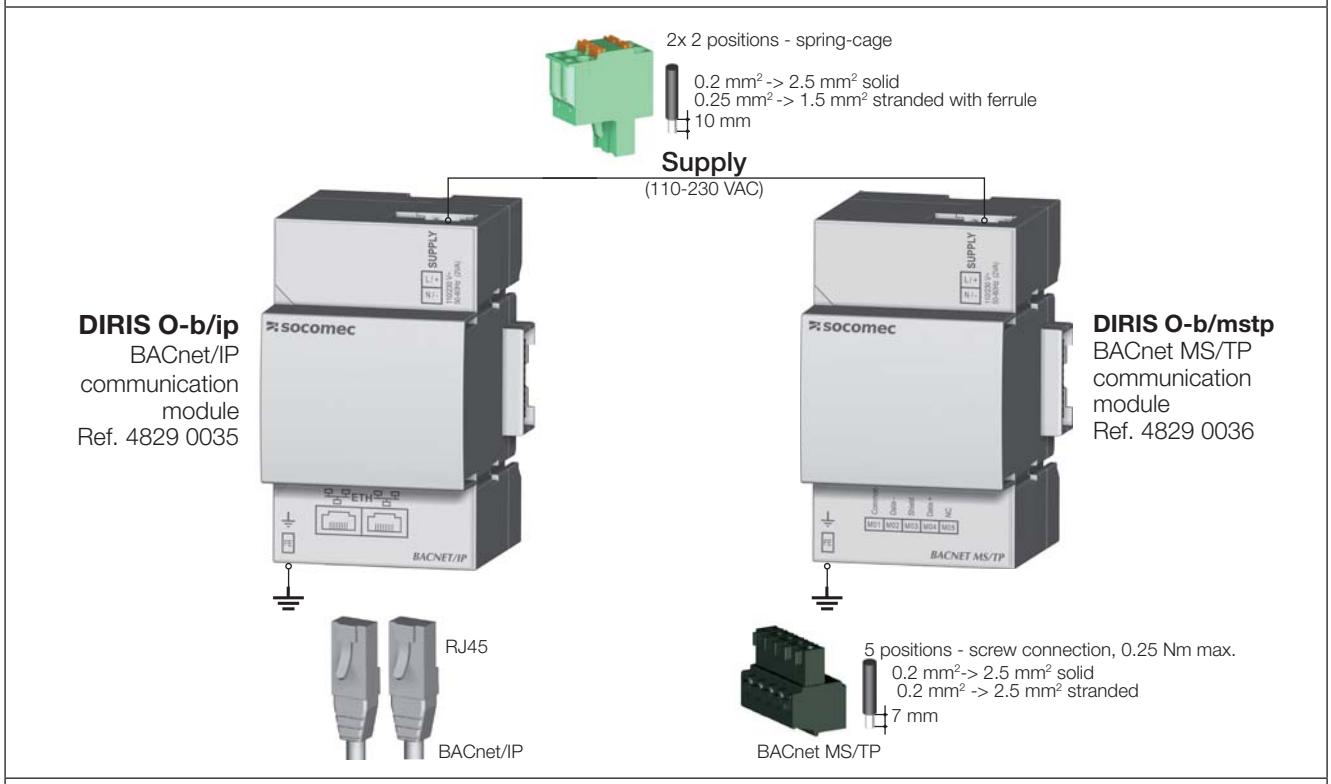

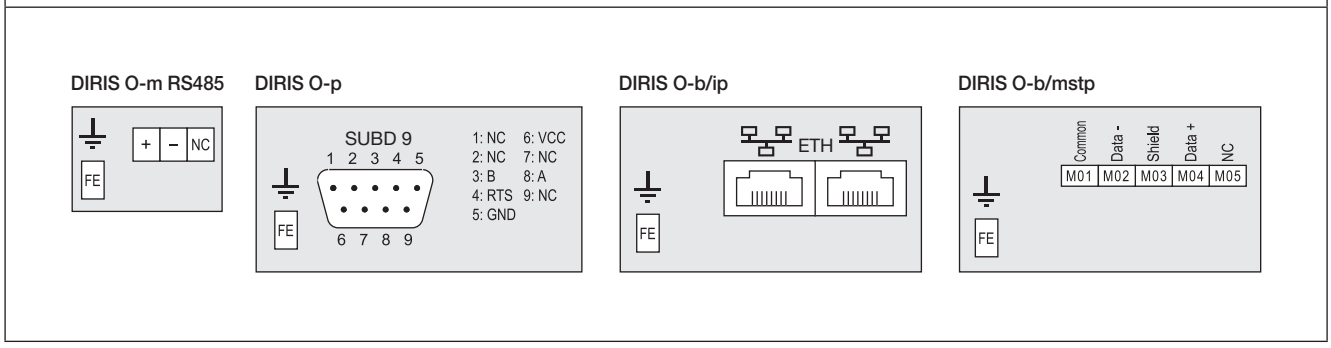

6.3. Connecting the current sensors

6.3.1. Connection concept

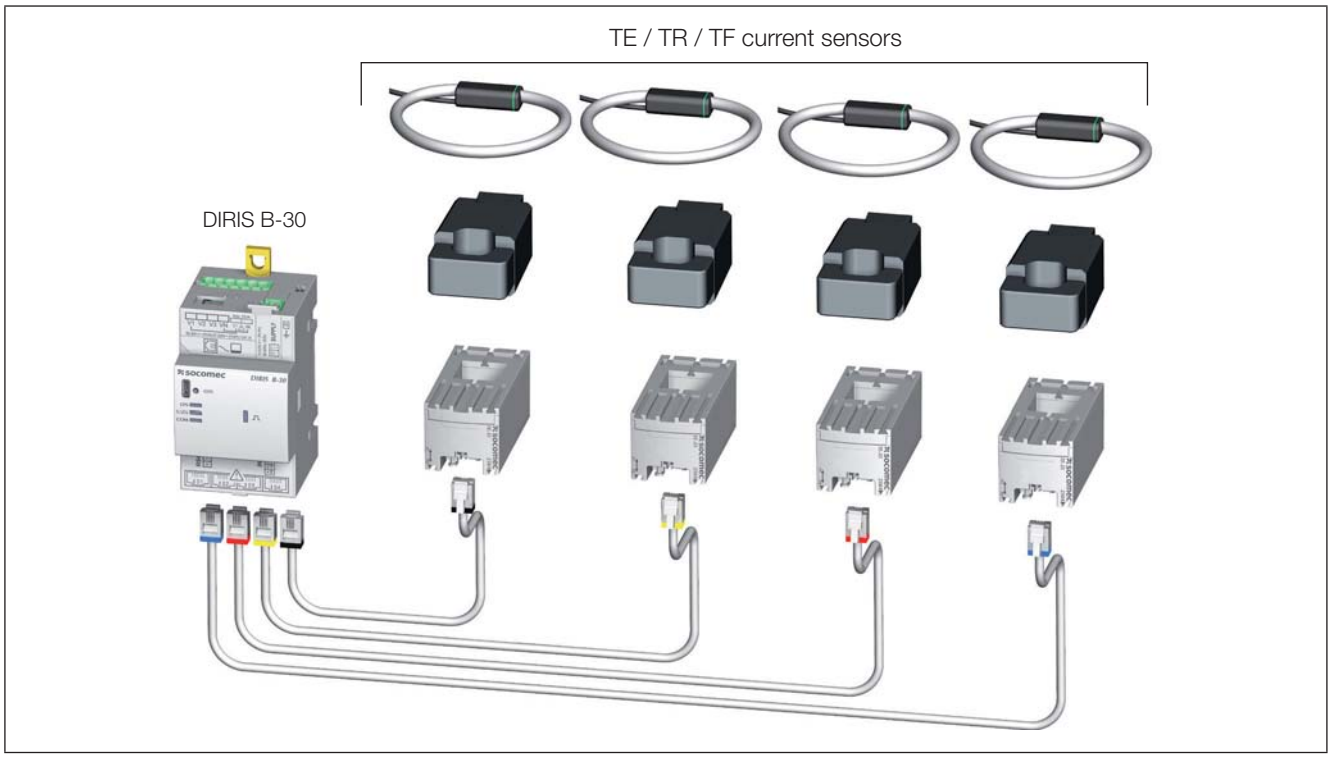

⚠	Recommendations: - Use only SOCOMEC cables for the current sensors or equivalent cables of the following type: RJ12, straight, twisted pair, unshielded, 300 V cat.III. -40 / +85°C in accordance with IEC 61010-1 Ed. 3.0. - It is recommended that current sensors are installed in the same direction.

6.3.2. Details of the RJ12 connections for each current sensor

TE	TR	TF
TE-18 to TE-55 **TE-90** 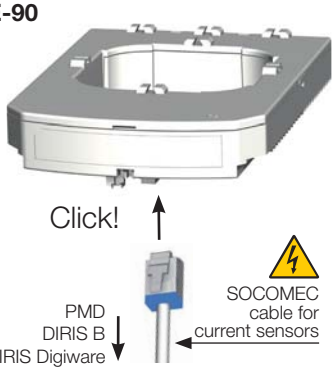 	 	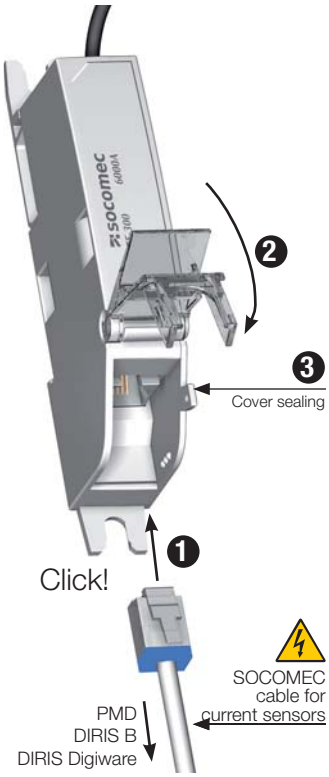

6.3.3. Connection to the electrical network and to the loads

The DIRIS B-30 can be used on either single-phase, two-phase or three-phase networks.

Different loads will then be measured simultaneously, allowing great flexibility in terms of where it is fitted in the installation. The loads are measured using several types of sensor (closed, split-core, flexible) selected depending on the application. The link between the DIRIS B-30 and its associated sensors is performed using cables with RJ12 connectors. These connectors enable rapid, trouble-free installation, in complete safety, with no risk of the connector being inverted, and also offers automatic detection of the connected sensors.

In addition, the DIRIS B-30 is able to identify the majority of load types to be measured: single-phase, three-phase with or without neutral using 1, 2, 3 or 4 sensors for balanced or unbalanced loads. Several loads can be measured simultaneously.

The overall accuracy of the DIRIS B-30 + sensors measurement chain is guaranteed. To guarantee this accuracy, SOCOMEC cables must be used for the current sensors.

6.3.3.1. Configurable loads based on the network type

The table below summarises the loads that it is possible to configure depending on the type of network at the installation.

Network type	Configurable load
1P+N	1P+N – 1CT
2P	2P – 1CT
2P+N	2P+N – 2CT / 2P – 1CT / 1P+N – 1CT
3P*	3P – 3CT / 3P – 2CT / 3P – 1CT
3P+N	3P+N – 4CT / 3P+N – 3CT / 3P+N – 1CT / 3P – 3CT / 3P – 2CT / 3P – 1CT / 1P+N – 1CT

(*) Note: Single-phase loads cannot exist on a 3P network.

6.3.3.2. Description of the main network and load combinations

Legend:

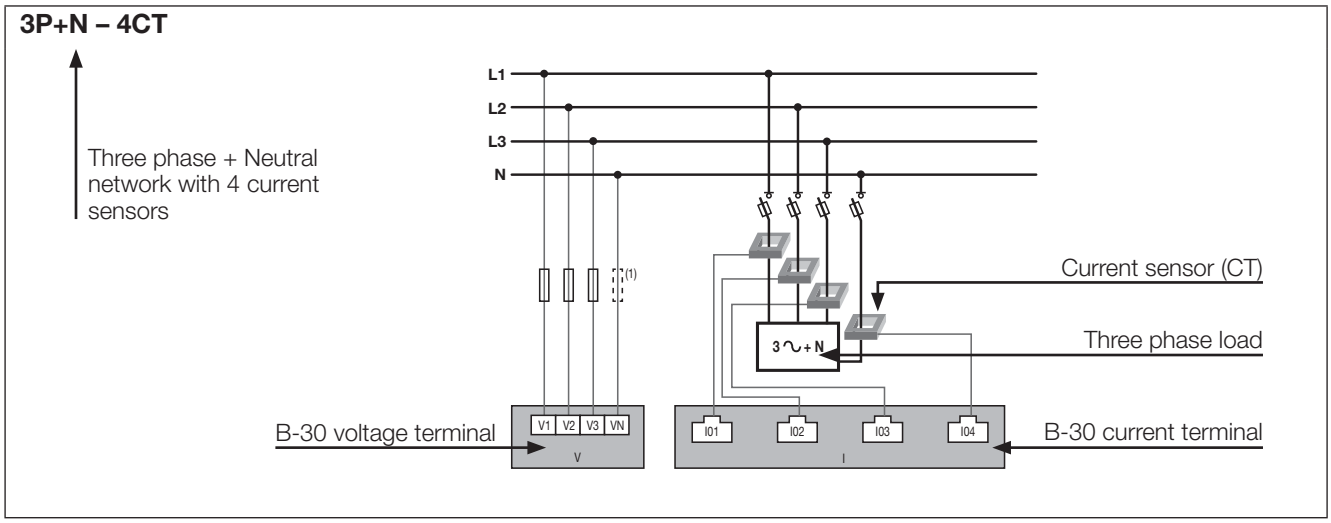

Each current input is individual; see below for some connection examples:

Three-phase + Neutral
3P+N – 4CT
(1 three-phase load + measured Neutral)

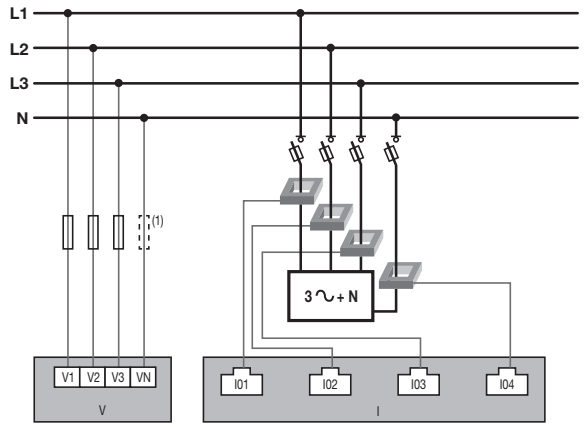

Three-phase + Neutral
3P+N – 3CT & 3P – 1CT
(1 unbalanced three-phase load + calculated Neutral + 1 three-phase balanced load)

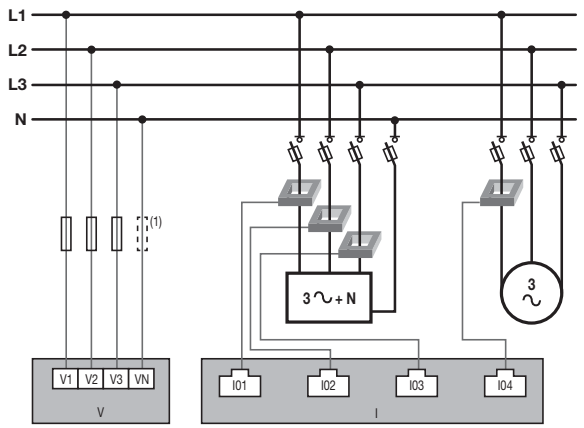

Three-phase + Neutral
3P+N – 3CT & 1P+N – 1CT(1 three-phase load + calculated Neutral + 1 single-phase load)

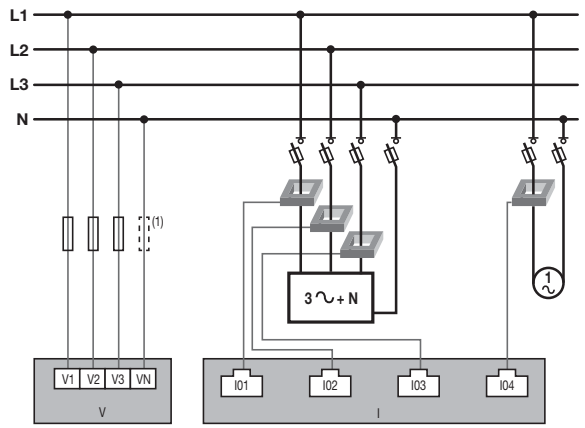

Three-phase
3P – 3CT & 3P – 1CT
(1 unbalanced three-phase load + 1 three-phase balanced load)

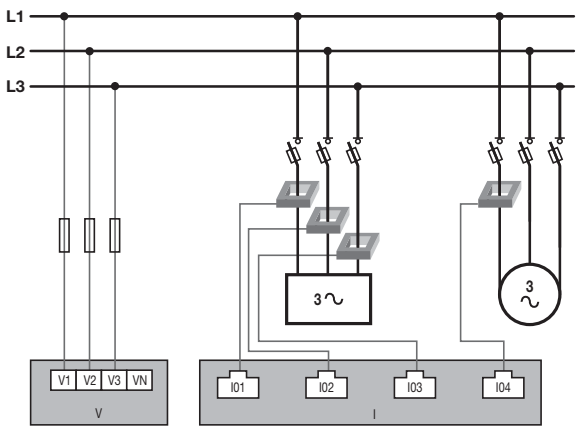

Three-phase
3P – 2CT (x2)
(2 three-phase loads*)

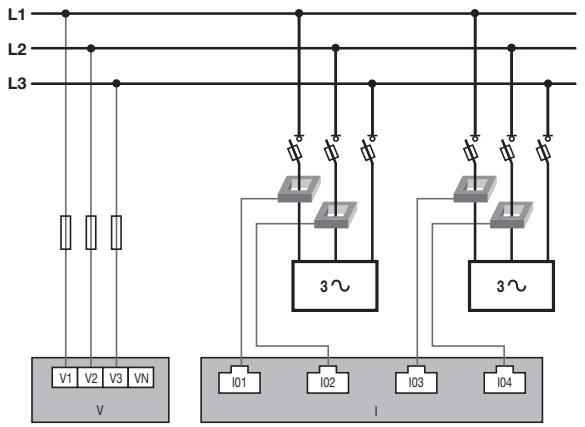

Three-phase
3P – 1CT (x4)
(4 three-phase balanced loads)

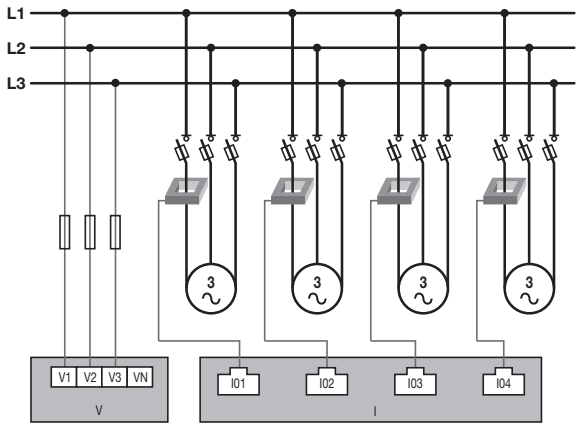

Fuse: 0.5 A gG / BS 88 2A gG / 0.5 A class CC

Two-phase + Neutral
2P+N – 2CT (x2)
(2 two-phase loads)

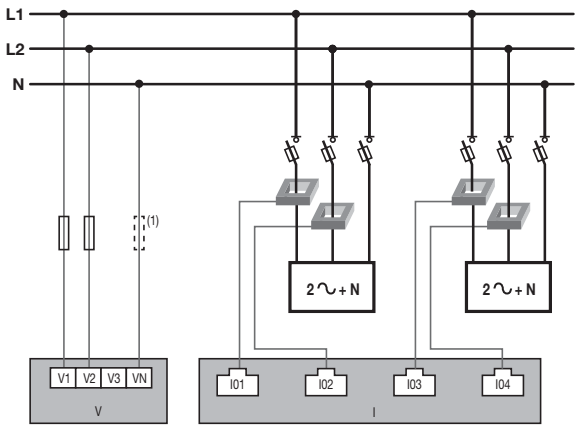

Two-phase
2P – 1CT (x4)
(4 two-phase loads)

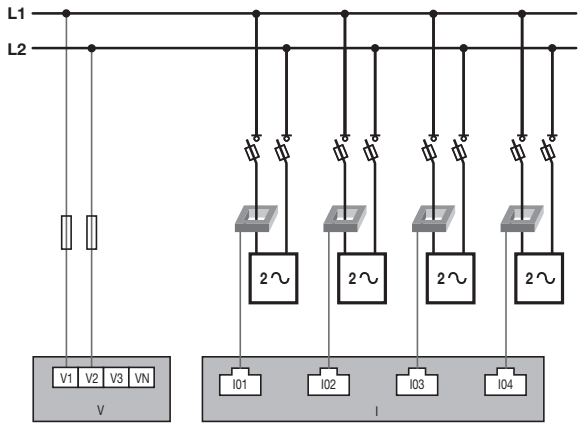

Single-phase
1P+N – 1CT (x4)
(4 single-phase loads)

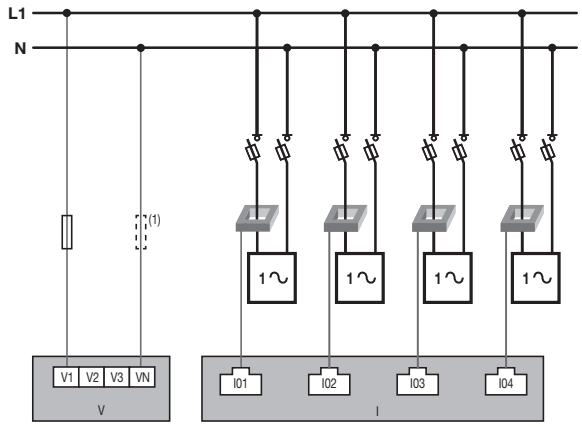

0.5 A gG / BS 88 2A gG / 0.5 A class CC fuse
For self-supply modules, a fuse must be added to the neutral.

Fuse: 0.5 A gG / BS 88 2A gG / 0.5 A class CC

Notes relating to connections:

The **Easy Config** software can also be used to select numerous other configuration variants for the types of loads and associated network voltages.

3P – 2CT: this connection reduces the accuracy of the phases, the current for which is worked out by vector calculation, by 0.5%.

3P – 1CT: this connection requires a three-phase network that is perfectly balanced.

6.3.4. Connection of the functional earth

It is recommended that the functional earth is connected to guarantee optimum measuring accuracy and better emissivity/immunity for the electromagnetic compatibility (class B in conducted emission). Earth must not be used in a neutral IT system.

7. STATUS AND AUTO-ADDRESSING LEDS

7.1. Status LEDs

These LEDs can be used to find out the status of the device at any time.

The addressing button is used to automatically assign a Modbus address from the gateway.

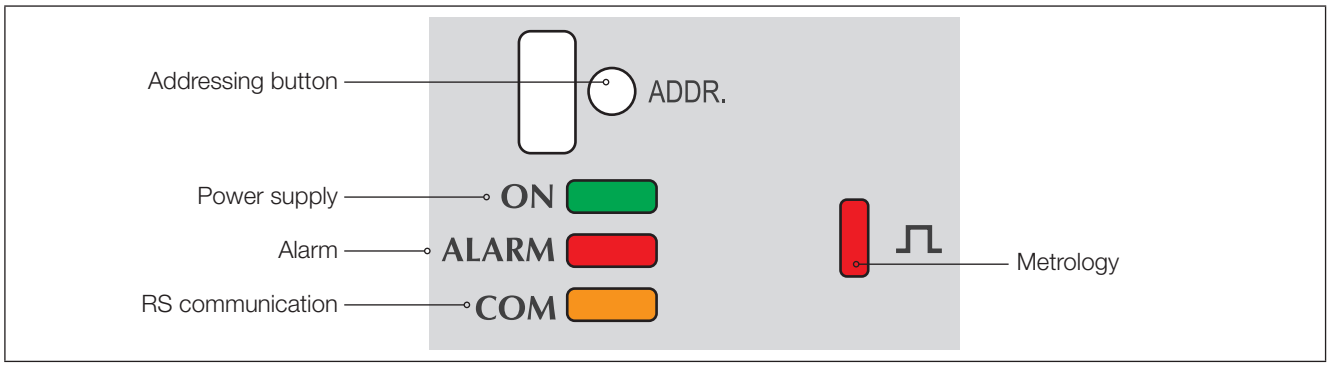

LED state	Fixed	Blinking	Pulse
ON	In operation	10 seconds - on request via a Modbus control to identify the device (remote screen, etc.)	1 second to start-up
/ALARM	An alarm (logical/analogue, etc.) is active (takes priority if there is a setup alarm at the same time)	At least one setup alarm is active (current sensor disconnected, V/I not compatible, etc.)	1 second to start-up
COM	Addressing problem.	Address OK	1 second to start-up and when a frame received is processed
⎍	-	-	Corresponds to the metrological pulse weight

7.2. Auto-addressing

Auto-addressing mode is used to automatically allocate addresses to products connected to the gateway. This mode is only compatible with DIRIS B-30 and Digiware type PMDs. The addresses will be allocated manually on the other PMD (DIRIS A) and meters (COUNTIS).

Two modes are available:

- Mode 1 - Auto-detection and automatic addressing
- Mode 2 - Auto-detection and address selection

Mode 1 is without external equipment (see description below).

Mode 2 is carried out from a PC equipped with Easy Config. This mode is described in the Easy Config manual.

Description of mode 1

Flashing LED LED on continuously

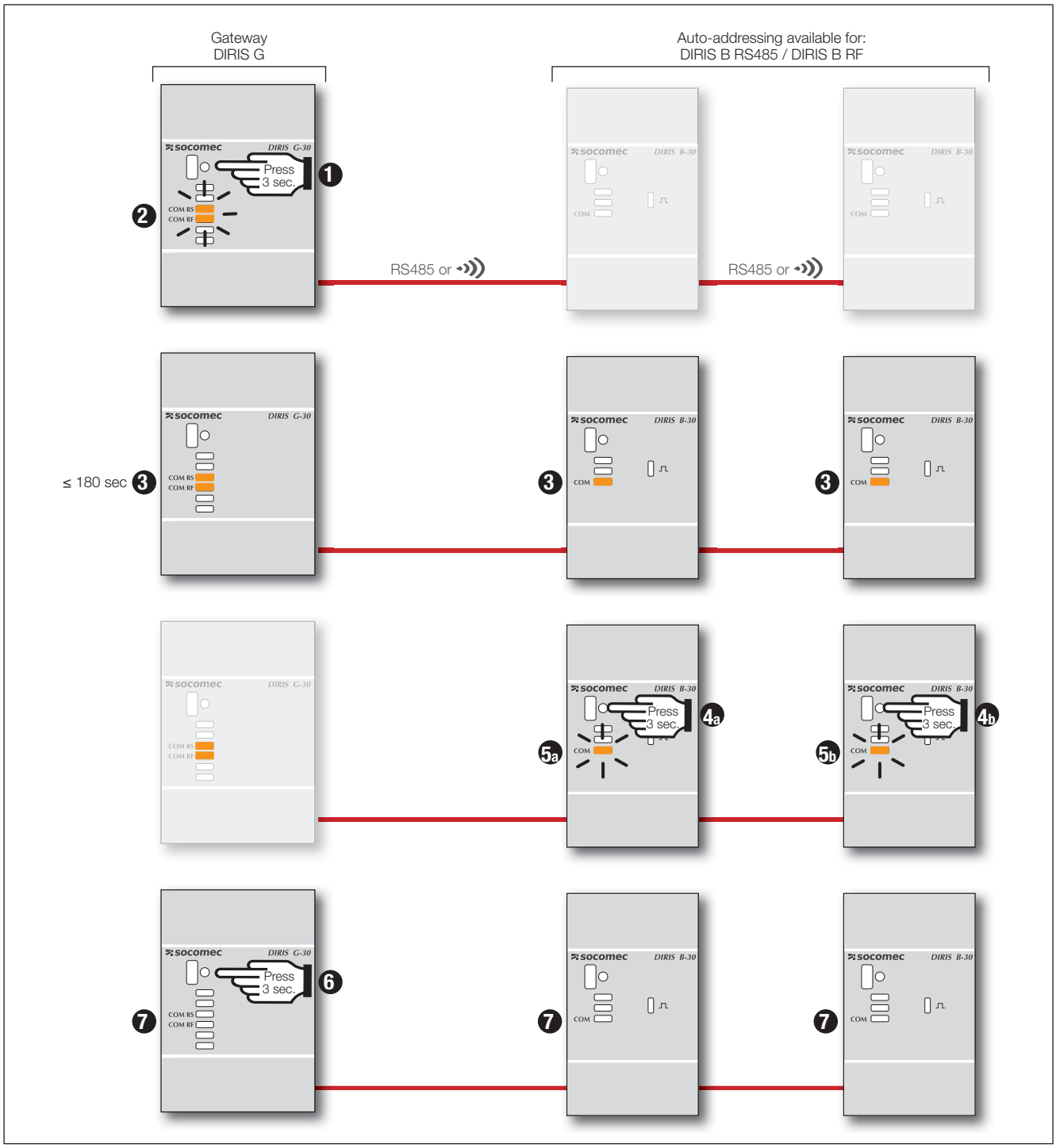

Note: During the auto-addressing process, the RS485 line is reserved for allocating addresses and no other exchange of data is possible at this time

8. COMMUNICATION

8.1. General information

Depending on the reference, the DIRIS B-30 communicates via RS485 using the Modbus protocol or via a radio (RF) link. With a RS485 link, the DIRIS B-30 (ref.4829 0000) can be connected directly to a PC, to a PLC or to the DIRIS G-30, G-40, G-50 and G-60 gateways (see corresponding manual for more details) to exploit the data. In RF link, the DIRIS B-30 RF (ref.4829 0002) communicates with the DIRIS G-40 and G-60 gateways in RS485/RF version (references: 4829 0301 and 4829 0303).

Example of an installation integrating DIRIS B-30 RF, DIRIS B-30 RS485 and other products with a DIRIS G-40 or G-60 gateway:

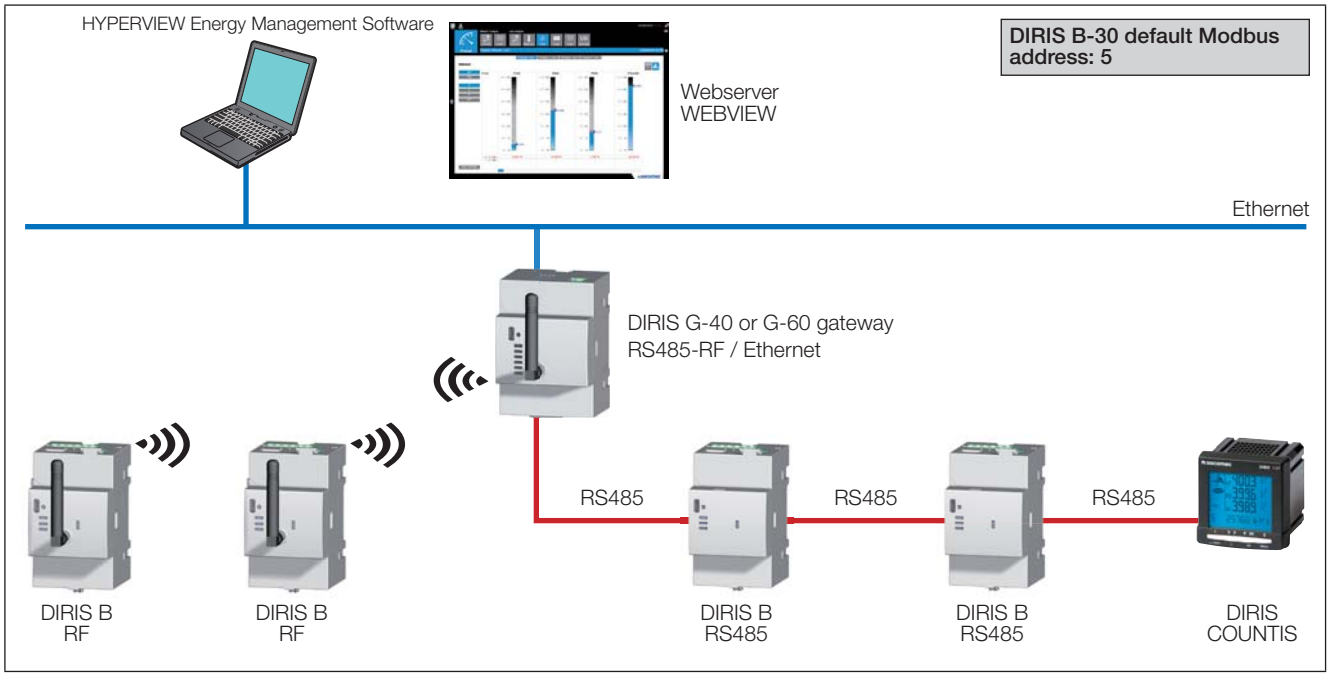

8.2. RS485 rules

RS485 communication is available on the DIRIS B-30 (ref. 4829 0000). It is achieved via an RS485 serial link (2- or 3-wire) using the Modbus RTU protocol for using products from a PC, PLC or gateway.

The Modbus protocol requires a dialogue with a master/slave structure. The mode of communication is the RTU (Remote Terminal Unit). In a standard configuration, an RS485 link enables the interconnection of 32 products to a PC, a PLC or the gateway over a distance of 1200 metres.

Connection between the DIRIS B-30 RS485 and the DIRIS G gateway:

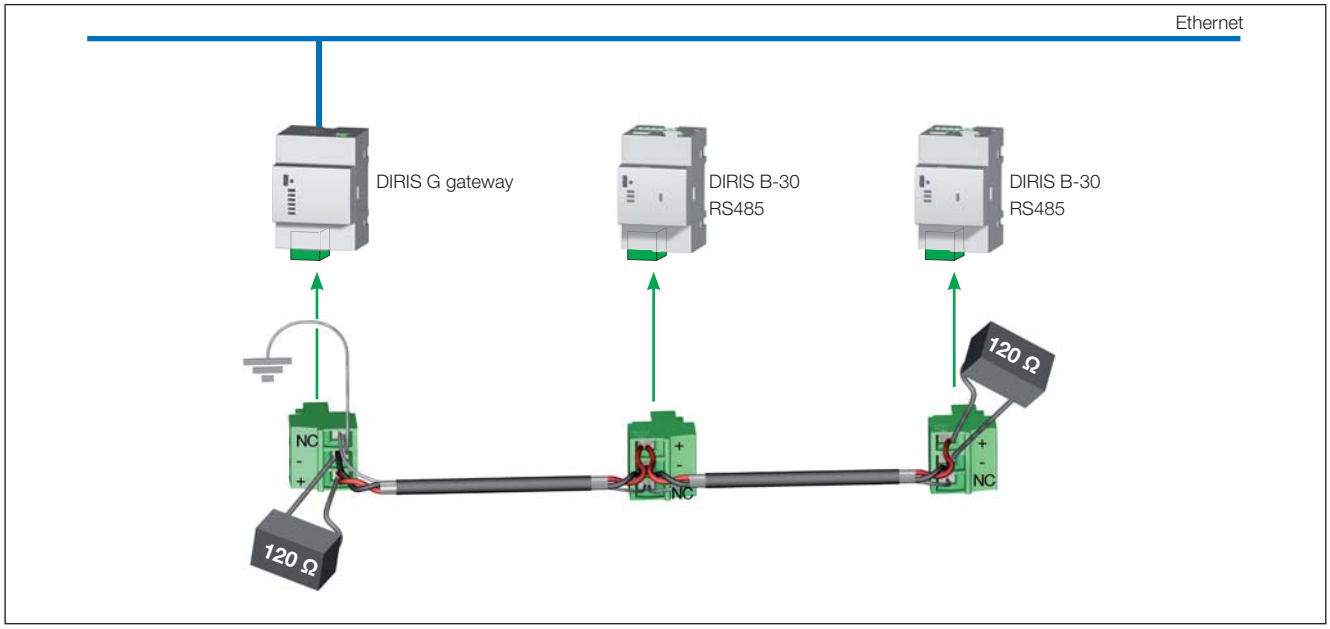

A LIYCY type connecting cable with a shielded twisted pair is required. In a disturbed environment or large network (in terms of length or number of products) the use of a type LIYCY-CY twisted pair with general shielding is recommended.

A 120-ohm resistor must be placed at both ends of the link.

A 120-ohm resistor is supplied with each DIRIS B-30 and with each DIRIS G gateway.

8.3. Radio-frequency (RF) rules

Wireless radio-frequency (RF) communication is available on DIRIS B-30, reference 4829 0002. The frames are transferred via a radio frequency in the bandwidth frequency 868MHz. The DIRIS B-30 which use wireless communication will be combined with the DIRIS G-40 and G-60 gateways in the RS485/RF version and will be seen as Modbus RTU slaves by these gateways.

These gateways collect data from the wireless DIRIS B-30 and also from the DIRIS B-30 or other products (Countis, Diris...) with a cabled RS485 link. This data can then be transferred to a PC via an Ethernet link with Modbus TCP protocol.

The WEBVIEW web server embedded in the gateway offers advanced data Monitoring and Reporting functions (refer to the corresponding manual for more details).

The DIRIS B-30 equipped with a wireless communication link are particularly useful for using loads located in isolated, remote areas, without the need to set up a cabled communication link.

Example of an installation integrating DIRIS B-30 RF with a DIRIS G-40 or G-60 gateway:

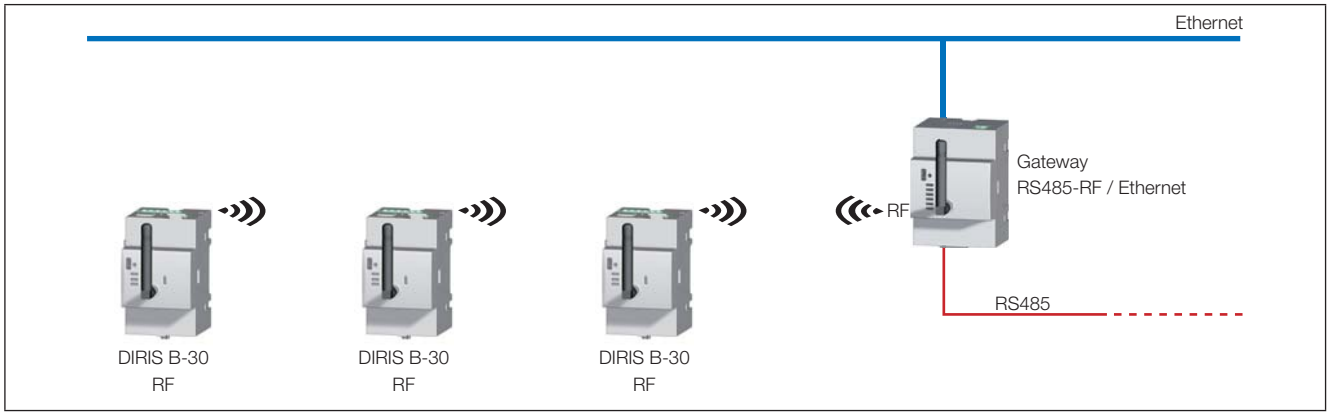

8.3.1. Installation

Only use antennae recommended by SOCOMEC.

The DIRIS B-30 RF communicates over a distance of 300 metres in free-field conditions.

The permitted occupancy rate depends on the frequency used. The frequency is selected using the Easy Config configuration tool.

The table below describes the permitted occupancy rate based on the selected frequency and the resulting maximum number of DIRIS B-30 which can be connected.

Channel no.	Frequency (MHz)	Permitted occupancy rate	Maximum number of DIRIS B-30 connected
420	868.1000	1%	16
436	868.3000	1%	16
452	868.5000	1%	16
472	868.7500	0.10%	3
488	868.9500	0.10%	3
504	869.1500	0.10%	3
534*	869.5250	10%	32
539	869.5875	10%	32

According to EN300 220: radiated radio and REC7003 emissions: use of the RF 868 MHz bandwidth.

Note: in order to observe a frequency spacing of 200 kHz, channels 534 and 539 cannot be used at the same time.
*Default channel.

8.3.2. EC Declaration of Conformity

The EC Declaration of Conformity for the DIRIS B-30 RF is available here:
www.socomec.com/en/diris-b

8.4. Communication tables

The communication tables and associated explanations can be found on the documentations page for the DIRIS B-30 on the SOCOMEC website at the following address:
www.socomec.com/en/diris-b

9. CONFIGURATION

Configuration can be carried out using the Easy Config configuration software or directly from the remote display. The Easy Config software is used to configure the DIRIS B-30 directly via RS485 or USB. Easy Config must be installed before using the USB connection.
If the DIRIS B-30 is combined with the DIRIS G-30, G-40, G-50 or G-60 gateway, it can be configured though this via Ethernet or USB.
To set the parameters from the remote display, refer to the manual for the display.

9.1. Configuration using Easy Config

9.1.1. Connection modes

Configuration using Easy Config directly (USB)

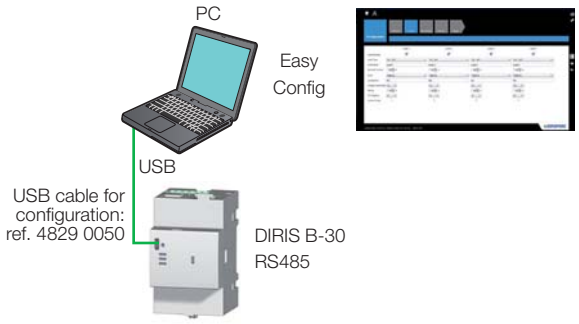

Configuration using Easy Config via a DIRIS G gateway (USB)

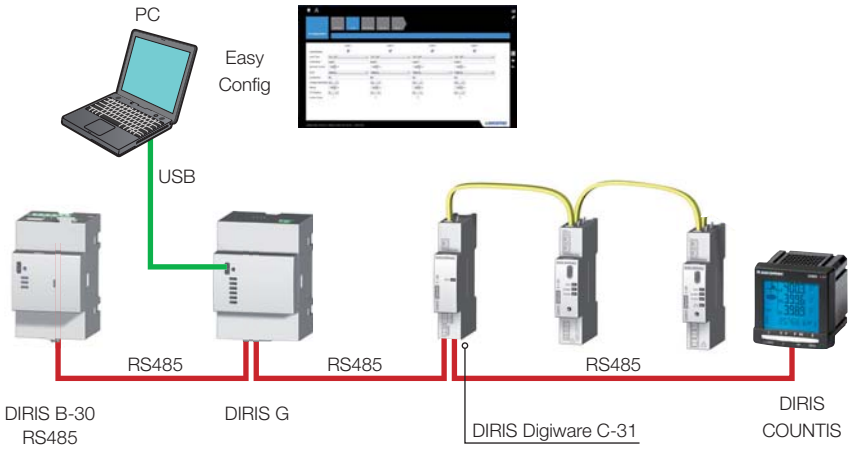

Configuration using Easy Config via a DIRIS G monitor (USB)

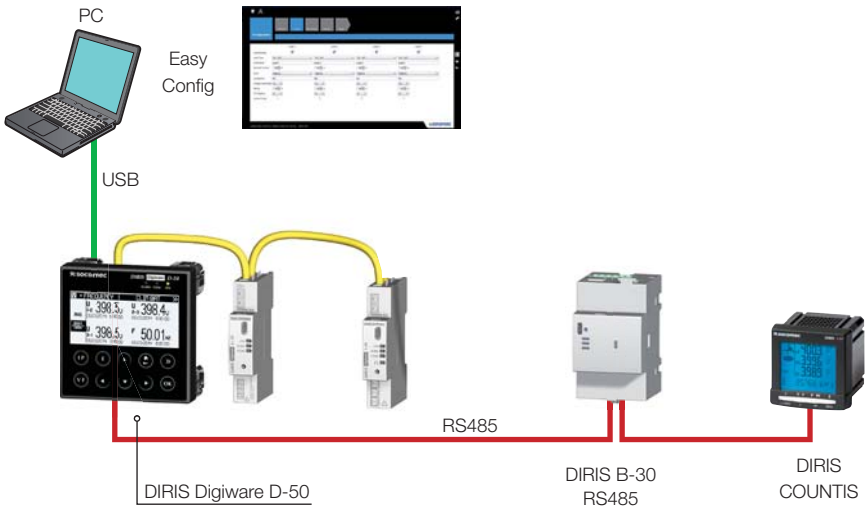

Configuration using Easy Config via a DIRIS G gateway (Ethernet)

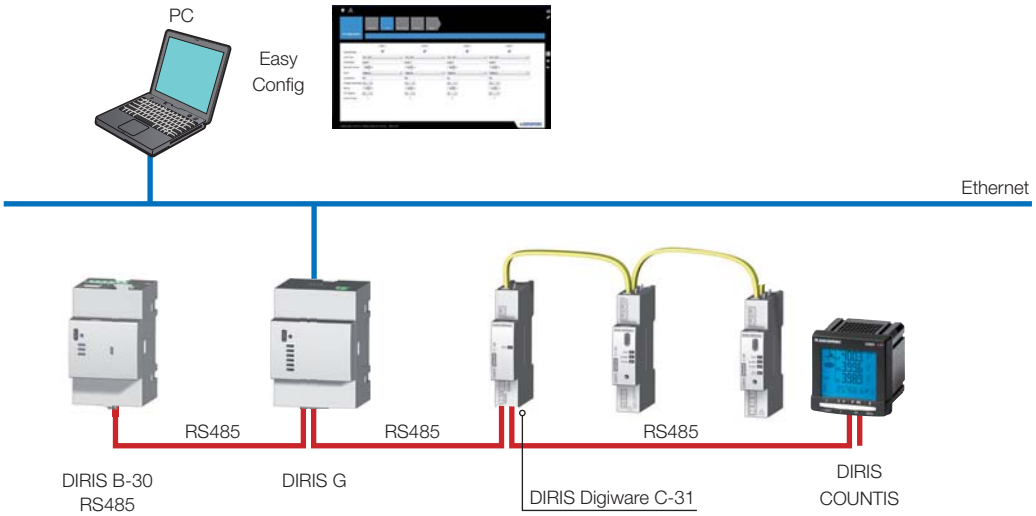

Configuration using Easy Config via a DIRIS D-50 display (Ethernet)

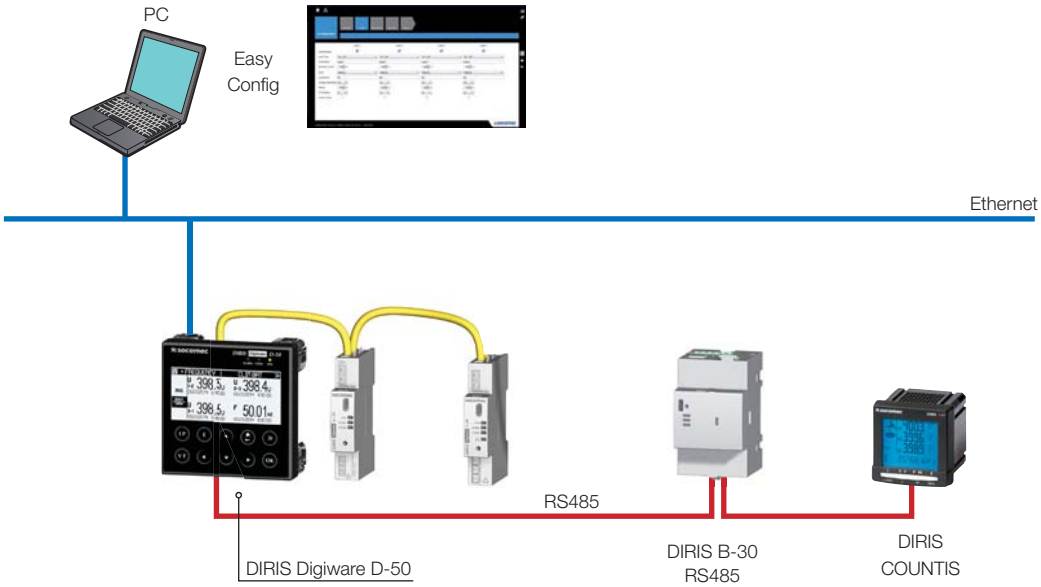

9.1.2. Using Easy Config

Easy Config is configuration software used to set device parameters easily and quickly. Parameters are set in successive steps:

Network —> Loads —> Measurement method —> Values to be stored —> Alarms —> End of configuration

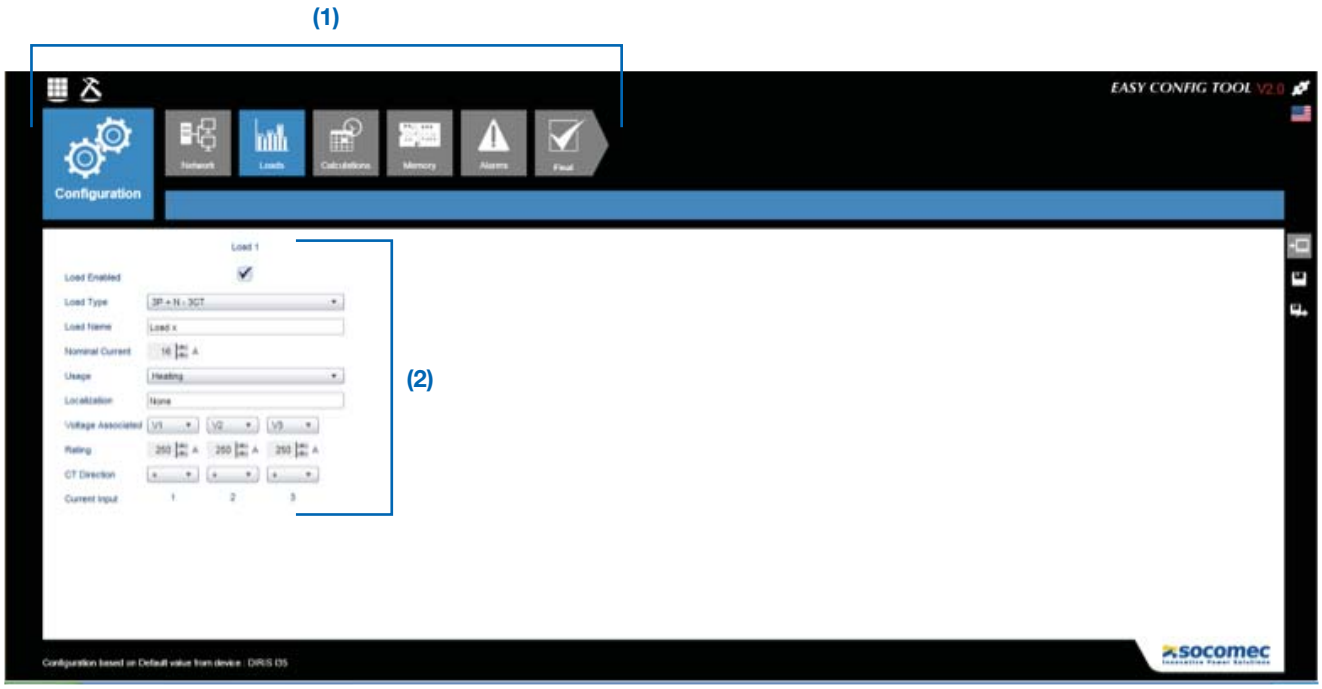

For each setting selected (1) a customised screen appears, depending on the connected device (2).

Network configuration

In the electrical network configuration menu, the user selects the type of network (three-phase, single-phase, etc.), the nominal voltage, the network frequency, the direction of phase rotation and whether or not a voltage transformer is used.

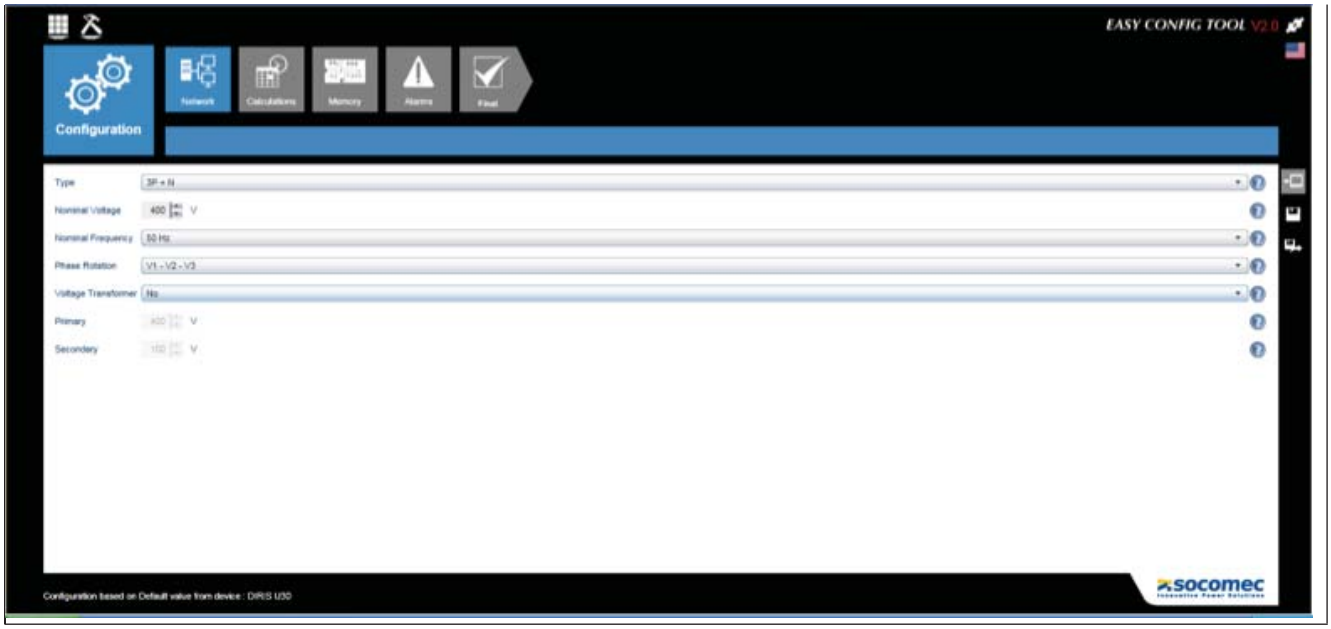

Configuring the loads

The number and type of loads can be accessed in the load configuration menu. The user can also define its nominal current, the name of the load, its usage and its location within the electrical installation.

Calculation method

The calculation methods for the various electrical parameters and the integration time are defined in this screen.

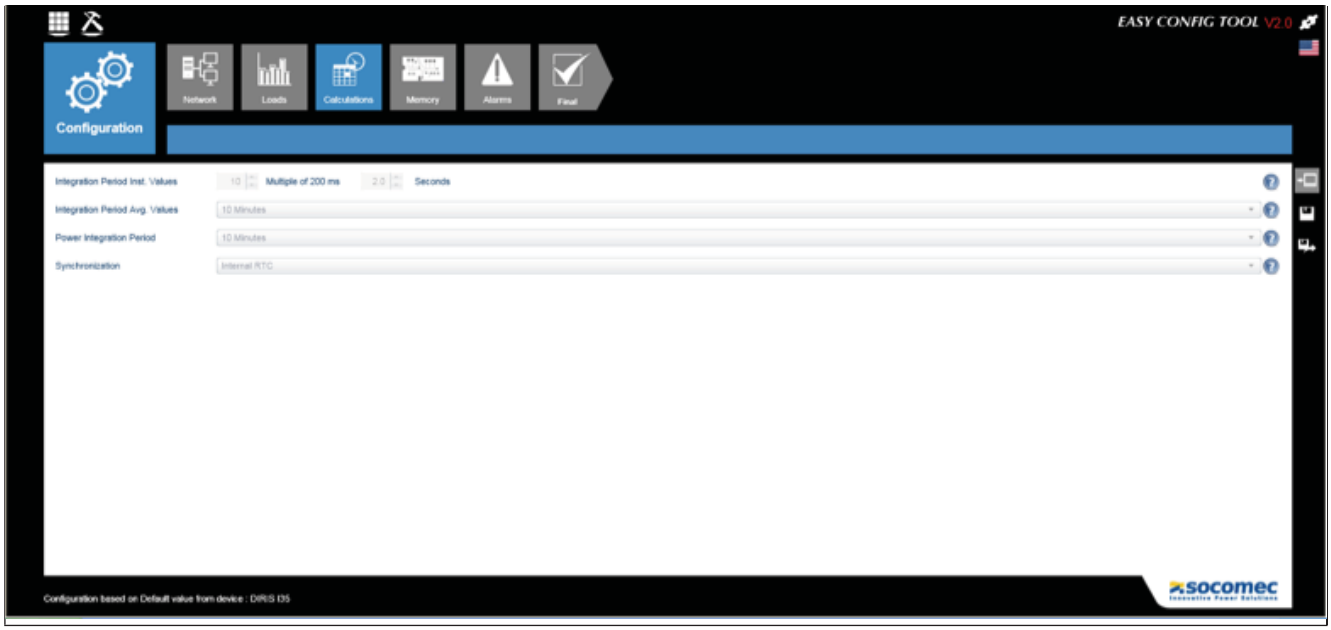

Alarms

The type of alarm and the configuration are set in Easy Config, see section ""10. ALARMS", page 48 for more details.

9.1.3. Time setting

From Easy Config, synchronisation is completed from an SNTP server or manually. The time may be displayed on connected products automatically based on a configurable update schedule.

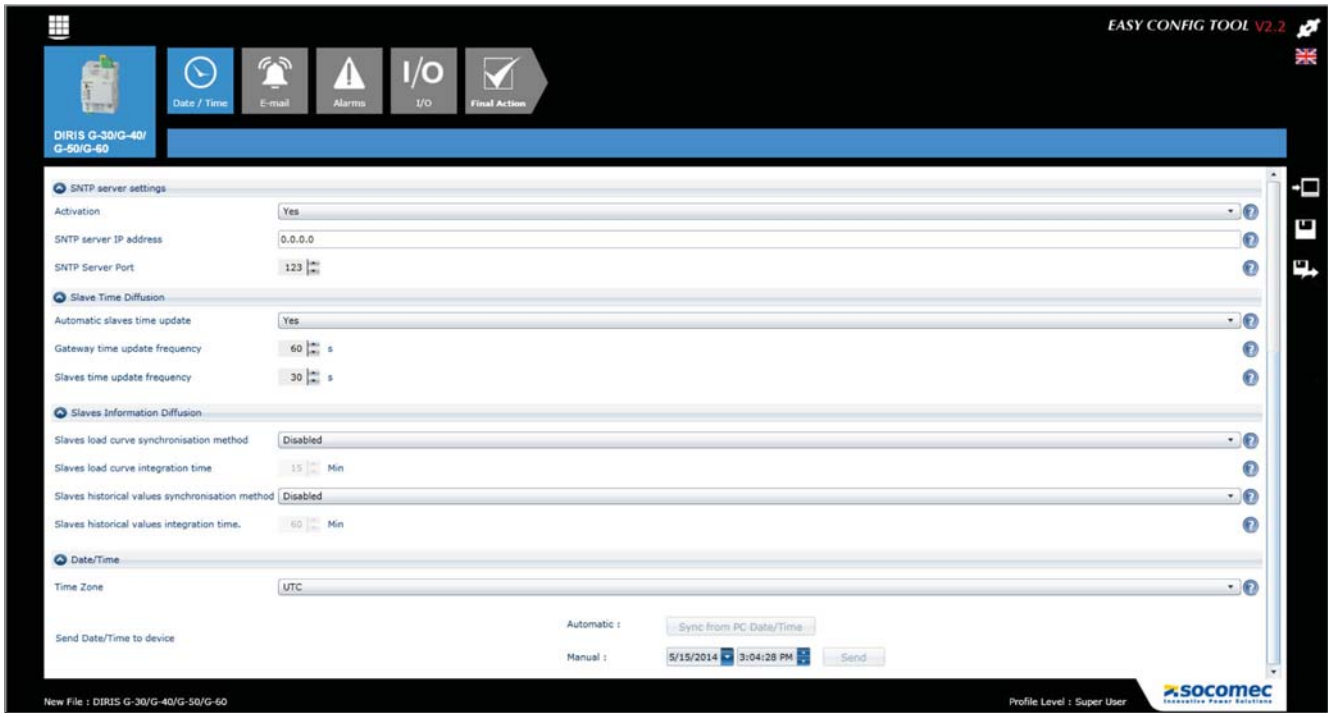

⚠	So that all connected products display the same time, use the DIRIS G gateway or the multipoint DIRIS Digiware D-50 screen for synchronisation. Do not use the synchronisation function on a single-point DIRIS D-30 screen as part of a multiproduct configuration.

9.2. Configuration from the DIRIS D-30 remote display

9.2.1. Connection mode

Configuration from the remote display (RJ9)

Refer to the manual for the DIRIS D-30 display for more details.

Connection cables for the remote display (RJ9):

Length (m)	Quantity	Reference
1.5	1	4829 0280
3	1	4829 0281

If the cables used are equivalent to SOCOMEC cables, ensure the characteristics given in the recommendations section ""6.1. DIRIS B-30 connection", page 29 are observed, and that they are a maximum of 3 metres in length.

10. ALARMS

10.1. Alarms upon events

Alarms can be generated when a threshold is exceeded for the electrical measurements, consumption, variations in level or change in input status. Also, combinations can be made on the alarms created.

up to 50 alarms detected are saved and timestamped; an alarm can have 3 distinct statuses: Alarm active, Alarm completed, Alarm completed and acknowledged. Alarms can be acknowledged either automatically or by user action, as required.

Up to 8 alarms for an electrical measurement are configured per item of equipment and 4 for changes in status of a digital input.

The alarms are configured via the Easy Config software.

10.1.1. Electrical parameters

- Alarm upon variation in the instantaneous or average value of an electrical value: Current, voltage, frequency, power, power factor, Cos phi, total harmonic distortion
- Selection of the hysteresis and high/low threshold
- Setting a time delay at the start and end of the alarm
- For the associated total harmonic distortion, voltage and current three-phase values, an alarm may be generated if the condition is fulfilled on a combination of phases:
  - On a single-phase: Phase1, Phase2, Phase3
  - On all the phases simultaneously: Phase1 and Phase2 and Phase3
  - On one phase of the three phases: Phase1 or Phase2 or Phase3

Example of configuring an alarm on the current via Easy Config:

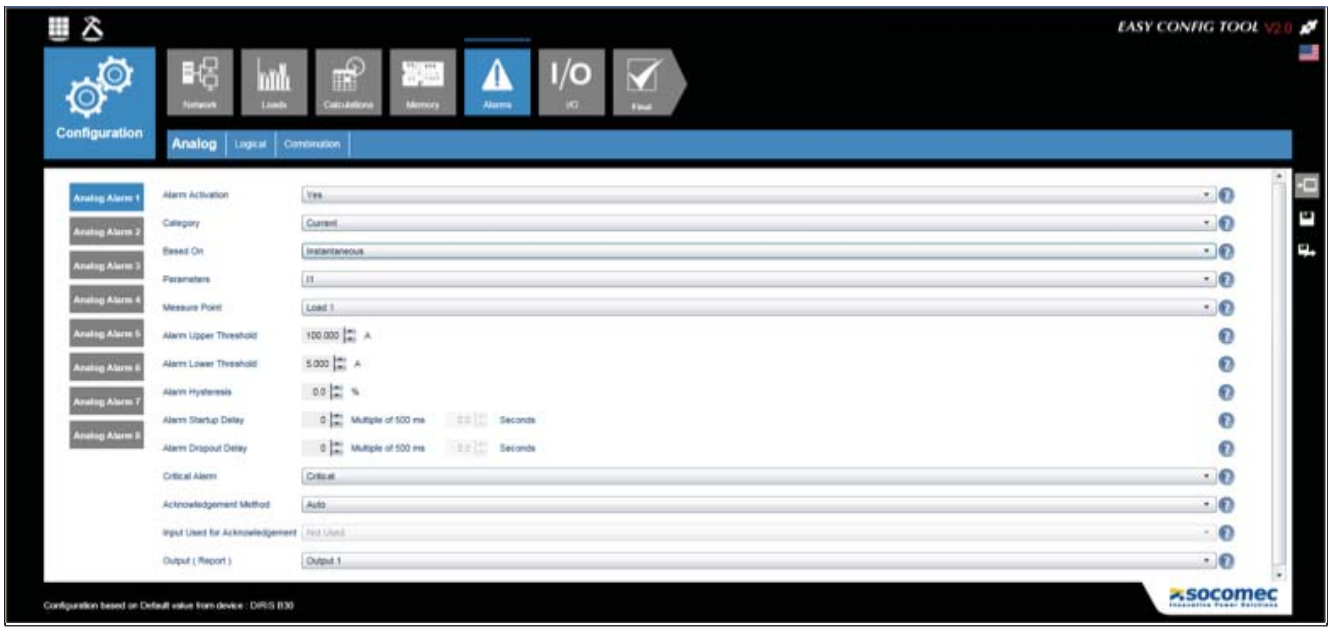

10.1.2. Voltage and current unbalance (in a three-phase network)

- Alarms on voltage unbalances: Unba, Unb
- Alarm upon current unbalance: Inba, Inb
- Selection of the hysteresis and high/low threshold
- Setting a time delay at the start and end of the alarm

10.1.3. EN 50160 voltage quality events

- Alarms on quality events for the voltage provided: voltage dips (Udip), temporary overvoltages (Uswl) and voltage outages (Uint), taking the occurrence into account: number, reference period.

10.1.4. Consumption

- Alarm on the energies: Ea+, Ea-, Er+, Er-, Eap (total or partial)
- Choice of a high (consumption too high) or low (consumption too low) threshold

10.1.5. Analogue inputs

- Alarm upon variations in the temperature or analogue input
- Selection of the hysteresis and high/low threshold
- Setting a time delay at the start and end of the alarm

10.1.6. Digital inputs

- Alarm upon change of status for a digital input
- Choice of a rising or falling edge
- Setting a time delay at the start and end of the alarm

Example of configuring an alarm on a digital input via Easy Config:

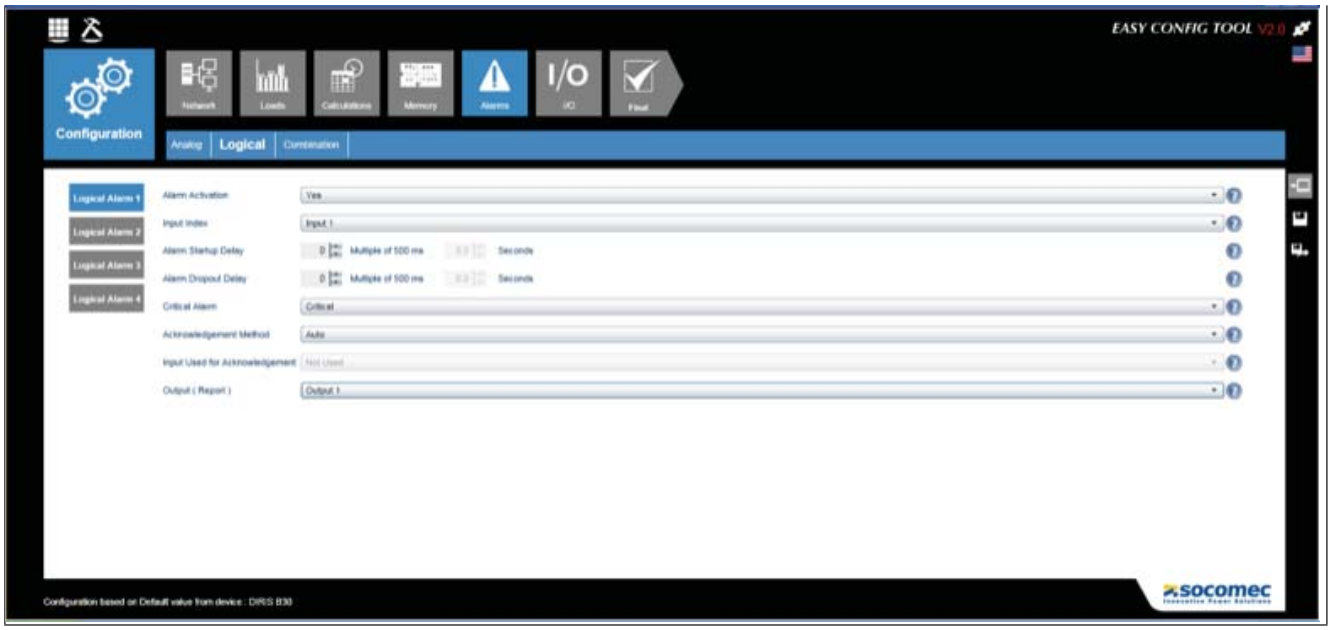

10.1.7. Combination of alarms

- 4 boolean combinations (OR, AND) on the defined alarms (electrical values, energy, inputs, etc.)

Example of configuring an alarm on a digital input via Easy Config:

10.2. Setup alarms

If an installation error is detected during setup, an alarm will be automatically generated.

10.2.1. Current/voltage compatibility

- Alarm upon connection error between the current and the voltage
- Requires a certain load level: 0.6 < PF < 1 and I> 2% In

10.2.2. Incorrect direction of rotation (three-phase network)

- Alarm upon identification of the incorrect direction of phase rotation (for example 3-2-1 instead of 1-2-3)

10.2.3. Faulty current sensor

- Alarm for detecting the absence of a current sensor

10.3. Setting up alarms

The installation alarms are automatically detected and alarms upon events are configured with the Easy Config software.

There are several ways of identifying the presence of an alarm:

10.3.1. ALARM LED on front

- Blinking: Setup alarm
- Fixed: Alarm upon event (takes priority if there is a commissioning alarm at the same time)

10.3.2. Activation of an output

- If an output is present on the device, it can be activated when an alarm is detected

10.3.3. Activation of an input

- If an input is present, the alarm can be acknowledged from this input. Acknowledgement of an alarm can only be taken into account if the alarm is complete

10.3.4. RS485 Modbus

- Information on the alarms with timestamping available via the RS485 communication bus
- Sends alarm acknowledgement

10.3.5. Display and Webview

- Information on the alarms with timestamping
- Sends alarm acknowledgement

11. CHARACTERISTICS

11.1. DIRIS B-30 characteristics

11.1.1. Mechanical characteristics

Casing type	DIN-rail mounting module and base
Casing protection index	IP20 / IK06
Index of protection of front side	IP40 on the nose in modular assembly / IK08
Sealing for the voltage and current connections	Sealable enclosure option for DIRIS B-30 and sensors: ref: 4829 0597
Weight	DIRIS B-30 RS: 175 g - DIRIS B-30 RF: 195 g

11.1.2. Electrical characteristics

Auxiliary power supply	
Alternative voltage	110-230 VAC ±15 % (Ph/N or Ph/Ph) Cat III
Frequency	50/60 Hz
Power consumption	< 2 VA without display, < 6 VA with display DIRIS D-30
Connection	Removable spring-cage terminal block, 2x 2 positions, 0.5 - 2.5 mm² solid cable or 0.25 - 1.5 mm² stranded cable with ferrule

11.1.3. Input characteristics

Input	
Number	2
Type / Power supply	Optocoupler internal (12 VDC ± 10%) or external (10-30 VDC± 10%) polarisation
Input function	Logic status, pulse meter or synchronisation pulse status (input 1)
Connection	Removable screw terminal block, 4 positions, stranded or solid 0.14 - 1.5 mm² cable

11.1.4. Measuring characteristics

Measurement accuracy	
Accuracy	According to IEC 61557-12 PMD DD classification in association with specified census (TE, TR, TF)
Measuring energy and power	
Active energy and active power accuracy	0.2 DIRIS B-30 class only Class 0.5 with TE or TF sensors Class 1 with TR sensors
Accuracy of reactive energy	Class 2 with TE, TR or TF sensors
Power factor measurement	
Accuracy	Class 0.5 with TE or TF sensors Class 1 with TR sensors
Voltage measurement	
Characteristics of the network measured	50-300 VAC (Ph/N) - 87-520 VAC (Ph/Ph) - CAT III
Frequency range	45 - 65Hz
Frequency accuracy	Class 0.02
Network type	Single-phase/ Two-phase / Two-phase with neutral / Three-phase / Three-phase with neutral
Measurement by voltage transformer	Primary: 400 000 VAC Secondary: 60, 100, 110, 173, 190 VAC

Input consumption	≤ 0,1 VA
Permanent overload	300 VAC Ph/N
Accuracy of voltage measurement	Class 0.2
Connection	Removable spring-cage terminal block, 2 x 6 positions, 0.5 - 2.5 mm² solid cable or 0.25 - 1.5 mm² stranded cable with ferrule
Measurement of currents	
Number of current inputs	4
Associated current sensors	Solid TE, split-core TR, flexible TF current sensors
Accuracy	0.2 DIRIS B-30 class only Class 0.5 with TE or TF sensors Class 1 with TR sensors
Connection	Specific Socomec cable with RJ12 connectors

11.1.5. Communication characteristics

DIRIS B-30 RS485	
Connection	RS485
Connection type	2 - 3 half duplex wires
Protocol	Modbus RTU
Baudrate	1,200 - 115,200 bauds
Function	Data configuration and reading
Connection	Removable screw terminal block, 3 positions, stranded or solid 0.14 - 1.5 mm² cable
DIRIS B-30 RF	
Connection	Wireless radio-frequency
Frequency range	868 MHz (low frequency: 868.1 MHz and high: 869.5875 MHz)
Baudrate	38400 bauds
Function	Configuration and reading of data via the DIRIS G-40 or G-60 gateway
USB	
Connection	USB 2
Protocol	Modbus RTU on USB
Function	DIRIS B-30 configuration
Connection	Type B micro USB connector

11.1.6. Environmental characteristics

Operating temperature	-10 - +70°C (IEC 60068-2-1/IEC 60068-2-2)
Storage temperature range	-25 - +85°C (IEC 60068-2-1/IEC 60068-2-2)
Operating humidity	55°C / 97% HR (IEC 60068-2-30)
Operating altitude	< 2,000 m
Vibration	0.35 mm, 25 Hz, 20 min/axe (CEI 61557-12)
Rated impulse voltage	IEC 60947-1 V. IMP: 6.4kV
PEP ecopassport - ISO 14025	DIRIS B-30: SOCO-2014-01-v1-fr, SOCO-2014-01-v1-en
Impact resistance	Front panel: 5J - casing: 1J (IEC 61010-1 Ed 3.0)

11.1.7. Electromagnetic compatibility

Immunity to electrostatic discharges	IEC 61000-4-2 LEVEL III

Immunity to radiated radio-frequency fields	IEC 61000-4-3 LEVEL III
Immunity to electrical fast transients/bursts	IEC 61000-4-4 LEVEL IV
Immunity to impulse waves	IEC 61000-4-5 LEVEL IV
Immunity to conducted disturbances	IEC 61000-4-6 LEVEL III
Immunity to power frequency magnetic fields	IEC 61000-4-8 400A/m LEVEL IV
Conducted emissions	CISPR11 Group1 - CLASS B
Radiated emissions	CISPR11 Group1 - CLASS B
Immunity to voltage dips and short interruptions	IEC 61000-4-11 LEVEL III

11.1.8. Safety

Safety	Compliance with Low Voltage Directive 2006/95/EC of 12th December 2006 (EN 61010-1:2010)
Insulation	Installation category III (300 VAC Ph/N), degree of pollution 2
UL	UL 61010-1 conformity

11.1.9. Service life

MTTF (mean time to failure)	> 100 years

11.2. DIRIS O optional modules characteristics

Mechanical characteristics	
Casing type	Modular for DIN rail mounting
Power supply(1)	
Alternative voltage	110-230 VAC ±15 %
Frequency	50/60 Hz
Connection	Removable spring-cage terminal block, 2x 2 positions, 0.5 - 2.5 mm² solid cable or 0.25 - 1.5 mm² stranded cable with ferrule
(1) No power supply to DIRIS O-it.	
DIRIS O-iod - 2 digital inputs/2 digital outputs	
Number of inputs	2 per optional module - 4 optional modules max.
Type	Optocoupler internal (12 VDC ± 10%) or external (10-30 VDC± 10%) polarisation
Function	Logic status or pulse meter
Input connection	Removable screw terminal block, 4 positions, stranded or solid 0.14 - 1.5 mm² cable
Number of outputs	0 output that can be used with DIRIS G
Type	Relay / 230 V ±15 % - 1A
Function	Configurable alarm (current, power, etc.) on threshold overruns or remote controlled status
Output connections	2 removable screw terminal blocks, 2 x 2 positions, stranded or solid 0.14 - 1.5 mm² cable
UL	UL 61010-1 conformity
DIRIS O-ioa - 2 analogue inputs/2 analogue outputs	
Number of inputs	2 per optional module - 4 optional modules max.
Type	4-20 mA
Function	Connection of analogue sensors (pressure, humidity, temperature, etc.)

Input connection	Removable screw terminal block, 4 positions, stranded or solid 0.14 - 1.5 mm² cable
Number of outputs	2 per optional module - 4 optional modules max.
Type	4-20 mA
Function	Transmission of an image of the measurements (power, currents, etc.) to automated machines
Output connection	Removable screw terminal block, 4 positions, stranded or solid 0.14 - 1.5 mm² cable
UL	UL 61010-1 conformity
DIRIS O-it - 3 temperature inputs	
Number of inputs	3 external inputs + 1 ambient measurement Max 1 optional module
Dynamic	-20 °C to 150 °C
Type	PT100 or PT1000
Function of inputs 1, 2 and 3	Temperature measurement
Connection	3 removable screw terminal blocks, 3 x 4 positions, stranded or solid 0.14 - 1.5 mm² cable
UL	UL 61010-1 conformity
DIRIS O-m - RS485 communication	
Connection	RS485 2 - 3 half duplex wires
Protocol	Modbus RTU
Baudrate	1,200 - 115,200 bauds
Function	Additional RS485 communication
Connection	Removable screw terminal block, 3 positions, stranded or solid 0.14 - 1.5 mm² cable
DIRIS O-p - PROFIBUS communication	
Connection	RS485
Protocol	PROFIBUS DPV1
Start-up time	35 s
Function	PROFIBUS communication
Connection	SubD9 connector
DIRIS O-b/ip - BACnet IP communication	
Protocol	BACnet IP
Baudrate	10 - 100 Mbit/s
Start-up time	1 min 15 s
Function	BACnet IP communication
Connection	RJ45 port
DIRIS O-b/mstp - BACnet MSTP communication	
Connection	RS485
Protocol	BACnet MSTP
Baudrate	9600 - 76800 bauds
Start-up time	1 min 15 s
Function	BACnet MSTP communication
Connection	Removable screw terminal block, 5 positions, stranded or solid 0.2 - 2.5 mm² cable

11.3. DIRIS D-30 display characteristics

11.3.1. Mechanical characteristics

Type of screen	Capacitive touch-screen technology, 10 keys
Screen resolution	350 x 160 pixels
Weight (g)	160

11.3.2. Single device connection

RJ9	Self-powered and data
Micro-USB	Upgrade
Degree of protection	IP65 (front)

11.3.3. Electrical characteristics

Power supply	24 VDC +10 % / -20 %
Power consumption	2 VA

11.3.4. Environmental characteristics

Storage temperature range	-20 - +70°C
Operating temperature range	-10 - +55°C
Humidity	95% at 40°C
Installation category	CAT III
Degree of pollution	2

11.4. TE, TR and RF sensors - characteristics

TE - closed sensor TE-18 to TE-55						
Model	**TE-18**	**TE-18**	**TE-25**	**TE-35**	**TE-45**	**TE-55**
Nominal current range In (A)	5 - 20	25 - 63	40 - 160	63 - 250	160 - 630	400 - 1000[1]
Max. current (A)	24	75.6	192	300	756	1200
Weight (g)	24	24	69	89	140	187
Max. voltage	300 V					
Rated withstand voltage	3 kV					
Frequency	50/60 Hz					
Intermittent overload	10x In in 1 second					
Measurement category	CAT III					
Protection degree	IP30 / IK06					
Operating temperature range	-10 - +70°C					
Storage temperature range	-25 - +85°C					
Relative humidity	95% RH without condensation					
Altitude	< 2,000 m					
PEP ecopassport - ISO 14025	TE sensors: SOCO-2014-03-v1-fr, SOCO-2014-03-v1-en					
UL	UL 61010					
Connection	SOCOMEC RJ12 cable, straight, twisted pair, unshielded, 300 V cat.III. -40/+85°C.					
[1] > 1000A with 5A TC adapter.						

TE - closed sensor TE-90	
Model	**TE-90**
Nominal current range In	600 A - 2000 A
Max. current	2400 A
Weight	163g (118g without clamps)
Max. voltage	600 V
Rated withstand voltage	3.6 kV AC 1 min
Frequency	50/60 Hz
Intermittent overload	40x In in 0.5 sec
Measurement category	CAT III
Protection degree	IP30
Operating temperature range	-10 - +70°C
Storage temperature range	-25 - +85°C
Relative humidity	95% RH without condensation
Altitude	< 2,000 m
Connection	SOCOMEC RJ12 cable, straight, twisted pair, unshielded, 300 V cat.III. -40/+85°C.

TR - Split-core sensor				
Model	**TR-10**	**TR-16**	**TR-24**	**TR-36**
Nominal current range In (A)	25 - 75	32 - 100	63 - 200	200 - 600
Max. current (A)	90	120	240	720

Weight (g)	74	117	211	311
Max. voltage	300 V			
Rated withstand voltage	3 kV			
Frequency	50/60 Hz			
Intermittent overload	10x In in 1 second			
Measurement category	CAT III			
Protection degree	IP20 / IK06			
Operating temperature range	-10 - +70°C			
Storage temperature range	-25 - +85°C			
Relative humidity	95% RH without condensation			
Altitude	< 2,000 m			
PEP ecopassport - ISO 14025	TR sensors: SOCO-2014-04-v1-fr, SOCO-2014-04-v1-en			
UL	UL 61010			
Connection	SOCOMEC RJ12 cable, straight, twisted pair, unshielded, 300 V cat.III. -40/+85°C.			
TF - Flexible current sensor				
Model	**TF-55**		**TF-120**	**TF-300**
Nominal current range In (A)	150 - 600		500 - 2000	1600 - 6000
Weight (g)	114		142	220
Max. voltage	600 V			
Rated withstand voltage	3.6 kV			
Frequency	50 / 60 Hz			
Intermittent overload	10x In in 1 second			
Measurement category	CAT III			
Protection degree	IP30 / IK07			
Operating temperature range	-10 - +70°C			
Storage temperature range	-25 - +75°C			
Relative humidity	95% RH without condensation			
Altitude	< 2,000 m			
UL	UL 61010 conformity			
Connection	SOCOMEC RJ12 cable, straight, twisted pair, unshielded, 300 V cat.III. -40/+85°C.			

12. PERFORMANCE CLASSES

Performance classes are drawn up in compliance with IEC 61557-12 version 1 (08/2007)

Classification of the DIRIS B-30	DD in combination with specified sensors (TE, TR, TF)
Temperature	K55
Overall operating performance class for active power or active energy	0.5 in combination with TE or TF solid-core sensors 1 in combination with TR split-core sensors

12.1. Specification of the characteristics

Symbol	Function	Overall operating performance class for DIRIS B-30 + associated sensors* (TE, TR, TF) in compliance with IEC 61557-12	Measurement range
Pa	Total active power	0.2% DIRIS B-30 only 0.5 with TE or TF sensors 1 with TR sensors	10% - 120% In 2% - 120% In 2% - 120% In
Q_A, Q_V	Total reactive power (arithmetic, vectorial)	1 with TE, TR or TF sensors	5% - 120% In
S_A, S_V	Total apparent power (arithmetic, vectorial)	0.5 with TE or TF sensors 1 with TR sensors	10% - 120% In
Ea	Total active energy	0.2% DIRIS B-30 only 0.5 with TE or TF sensors 1 with TR sensors	10% - 120% In 2% - 120% In 2% - 120% In
Er_A, Er_V	Total reactive energy (arithmetic, vectorial)	2 with TE, TR or TF sensors	5% - 120% In
Eap_A, Eap_V	Total apparent energy (arithmetic, vectorial)	0.5 with TE or TF sensors 1 with TR sensors	10% - 120% In
f	Frequency	0.02	45 - 65 Hz
I, IN	Phase current, measured neutral current	0.2 DIRIS B-30 only 0.5 with TE or TF sensors 1 with TR sensors	5% - 120% In 10% - 120% In 10% - 120% In
INc	Calculated neutral current	1 with TE or TF sensors 2 with TR sensors	10% - 120% In
U	Voltage (Lp-Lg or Lp-N)	0.2	50 - 300 VAC Ph/N
PF_A, PF_V	Power factor (arithmetic, vectorial)	0.5 with TE or TF sensors 1 with TR sensors	0.5 lagging to 0.8 leading
Pst, Plt	Flicker (short-term, long-term)	-	-
Udip	Voltage dip (Lp-Lg or Lp-N)	0.5	-
Uswl	Temporary overvoltages (Lp-Lg or Lp-N)	0.5	-
Uint	Voltage outage (Lp-Lg or Lp-N)	0.2	-
Unba	Voltage amplitude unbalance (Lp-N)	0.5	-
Unb	Voltage phase and amplitude unbalance (Lp-Lg or Lp-N)	0.2	-
THDu, THD-Ru	Total harmonic distortion rate of the voltage (relative to the fundamental, relative to the efficient value)	1	Orders 1 to 63
Uh	Voltage harmonics	1	-
THDi, THD-Ri	Total harmonic distortion rate of the current (relative to the fundamental, relative to the efficient value)	1 with TE, TR or TF sensors	Orders 1 to 63
Ih	Current harmonics	1 with TE, TR or TF sensors	-
Msv	Centralised remote control signals	-	-

*With SOCOMEC connection cables.

12.2. Evaluation of the power supply quality

Symbol	Function	Overall operating performance class for DIRIS B-30 + associated sensors (TE, TR, TF) in compliance with IEC 61557-12	Measurement range
f	Frequency	0.02	45 - 65 Hz
I, IN	Phase current, measured neutral current	0.2 DIRIS B-30 only 0.5 with TE or TF sensors 1 with TRsensors	5% - 120% In 10% - 120% In 10% - 120% In
INc	Calculated neutral current	1 with TE or TF sensors 2 with TRsensors	10% - 120% In
U	Voltage (Lp-Lg or Lp-N)	0.2	50 - 300 VAC Ph/N
Pst, Plt	Flicker (short-term, long-term)	-	-
Udip	Voltage dip (Lp-Lg or Lp-N)	0.5	-
Uswl	Temporary overvoltages (Lp-Lg or Lp-N)	0.5	-
Uint	Voltage outage (Lp-Lg or Lp-N)	0.2	-
Unba	Voltage amplitude unbalance (Lp-N)	0.5	-
Unb	Voltage phase and amplitude unbalance (Lp-Lg or Lp-N)	0.2	-
Uh	Voltage harmonics	1	-
Ih	Current harmonics	1 with TE, TR or TF sensors	-
Msv	Centralised remote control signals	-	-

SOCOMEC
R.C.S. Strasbourg B 548 500 149
B.P. 60010 - 1, rue de Westhouse - F-67235 Benfeld Cedex

www.socomec.com

542 869 D - EN - 02/16

Innovative Power Solutions

Non-contractual document. © 2016, Socomec SAS. All rights reserved.