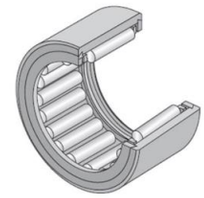

Technical data

NK9/16T2

Needle roller bearing, machined-ring, without inner ring

Needle roller bearing, machined-ring, without inner ring, double-side ribs

VISUAL (S)

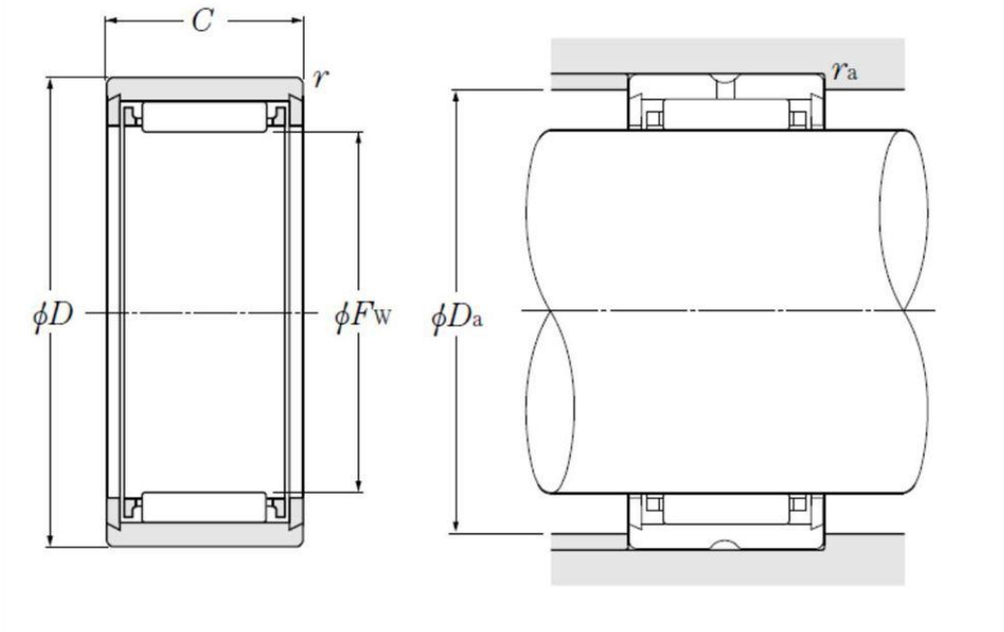

PRODUCT DEFINITION

Brand	NTN
Fw - Under rollers diameter	9 mm
D - External diameter	16 mm
C - Width of bearing, drawn cup or outer ring	16 mm
rs - Min fillet radius	0,3 mm
Lubrication hole on outer ring	Oui/Yes
k - Hole diameter	2 mm
Radial clearance class	CN

NK9/16T2

Needle roller bearing, machined-ring, without inner ring

PRODUCT DEFINITION	
Precision class	P0
Mass	0,013 kg

PRODUCT PERFORMANCE	
Cr - Dynamic load rating	5500000 mN
C0r - Static load rating	6400000 mN
N lim - Grease lubrication limit speed	120000 °/s
N lim - Oil lubrication limit speed	180000 °/s
Tmin - Min operating temperature	253,15 °K
Tmax - Max operating temperature	373,15 °K

ABUTMENT	
Da max - Max shoulder diameter OR	10,5 mm
ras max - Max shaft & housing fillet radius	0,3 mm