THIS DRAWING IS UNPUBLISHED. RELEASED FOR PUBLICATION 20
© COPYRIGHT 20 BY - ALL RIGHTS RESERVED.

| LOC | DIST |
|---|---|
| GE | 00 |

REVISIONS

| F | LTR | DESCRIPTION | DATE | DWN | APVD |
|---|---|---|---|---|---|
| | J3 | REVISED PER ECO-11-005030 | 11MAR2011 | RK | HMD |

1. ACCEPTS #4 SELF TAPPING SCREW (ELCO HI-LO THREAD CUTTING STYLE OR EQUIVALENT) TO BE DRIVEN AT 0.6±0.2 N-M.
2. HOUSING COLORS ARE MECHANICALLY KEYED TO MATE ONLY WITH IDENTICALLY COLORED PLUG ASSEMBLIES.

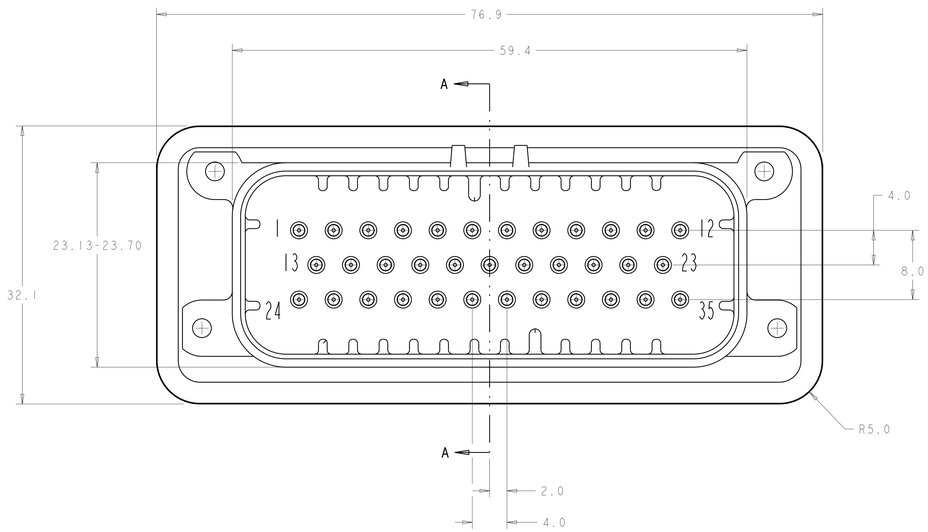


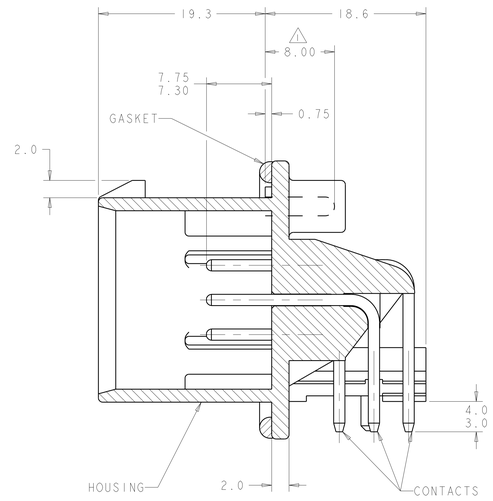


SECTION A-A

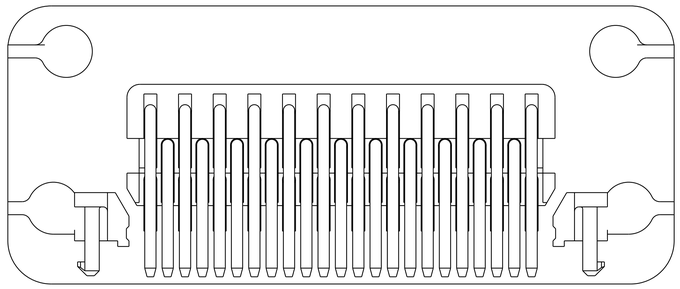

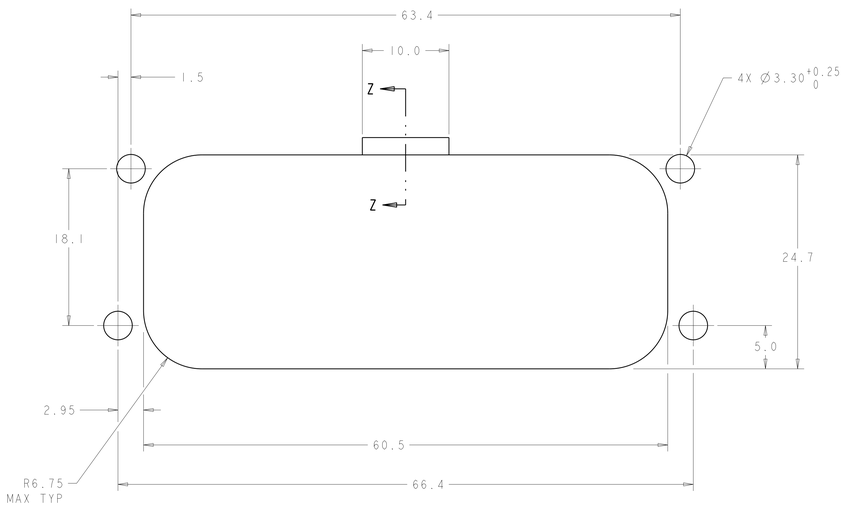


RECOMMENDED MOUNTING HOLE LAYOUT
FOR 5.0 MAX THICK PANEL

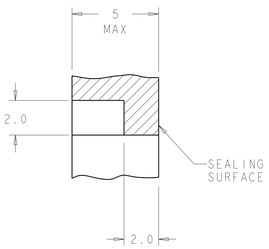


SECTION Z-Z
OPTIONAL CONSTRUCTION IF
THICKNESS IS GREATER THAN 2.0
SCALE 8:1

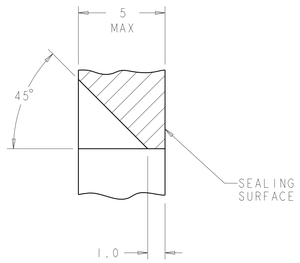


SECTION Z-Z
OPTIONAL CONSTRUCTION IF
THICKNESS IS GREATER THAN 2.0
SCALE 8:1

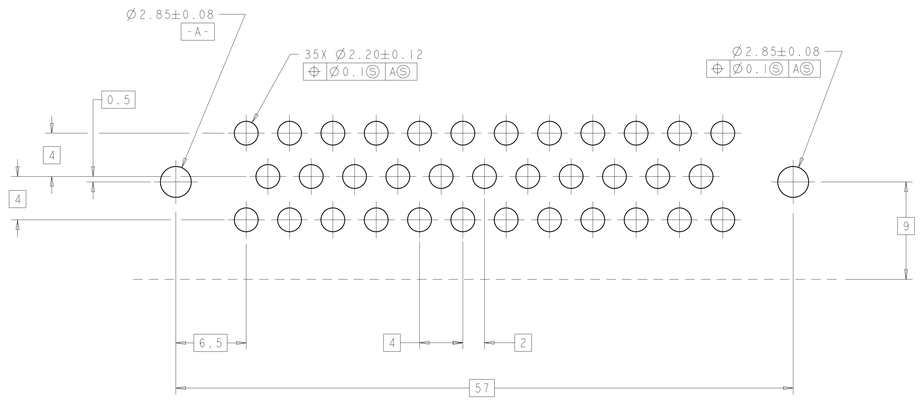


RECOMMENDED P.C. BOARD LAYOUT
FOR 1.57 THICK P.C. BOARD

776163-1 & 1-776163-1
KEY LOCATION AS SHOWN

| GASKET MATERIAL | CONTACTS MATERIAL | CONTACTS FINISH | HOUSING MATERIAL | HOUSING COLOR 2 | PART NUMBER |
|---|---|---|---|---|---|
| SILICONE | BRASS | DURAGOLD | PBT | ORANGE | 1-776163-6 |
| SILICONE | BRASS | DURAGOLD | PBT | BLUE | 1-776163-5 |
| SILICONE | BRASS | DURAGOLD | PBT | GRAY | 1-776163-4 |
| SILICONE | BRASS | DURAGOLD | PBT | NATURAL (WHITE) | 1-776163-2 |
| SILICONE | BRASS | DURAGOLD | PBT | BLACK | 1-776163-1 |
| SILICONE | BRASS | TIN | PBT | BLUE | 776163-5 |
| SILICONE | BRASS | TIN | PBT | GRAY | 776163-4 |
| SILICONE | BRASS | TIN | PBT | NATURAL (WHITE) | 776163-2 |
| SILICONE | BRASS | TIN | PBT | BLACK | 776163-1 |

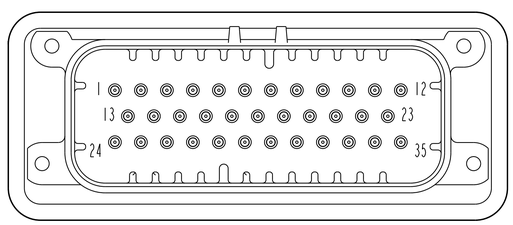


776163-2 & 1-776163-2
KEY LOCATION AS SHOWN
SCALE 3:1

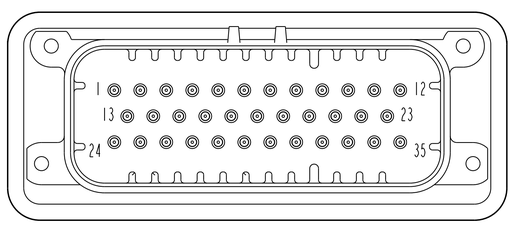


776163-4 & 1-776163-4
KEY LOCATION AS SHOWN
SCALE 3:1

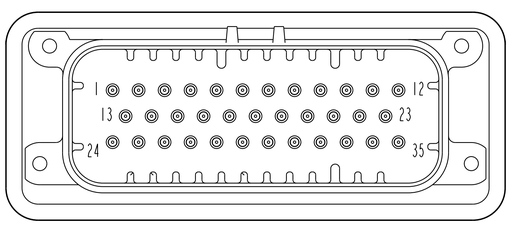


776163-5 & 1-776163-5
KEY LOCATION AS SHOWN
SCALE 3:1

THIS DRAWING IS A CONTROLLED DOCUMENT.

DIMENSIONS: mm

TOLERANCES UNLESS OTHERWISE SPECIFIED:
0 PLC ±-
1 PLC ±0.3
2 PLC ±0.13
3 PLC ±-
4 PLC ±-
ANGLES ±-
FINISH -

MATERIAL SEE TABLE

DWN R VESTAL 31DEC2002
CHK D CROWE 31DEC2002
APVD D CROWE 31DEC2002

PRODUCT SPEC -
APPLICATION SPEC -
WEIGHT -

CUSTOMER DRAWING

TE Connectivity

NAME HEADER ASSEMBLY, 35 POSITION, SNAP-IN, AMPSEAL

| SIZE | CAGE CODE | DRAWING NO | RESTRICTED TO |
|---|---|---|---|
| A0 | 00779 | C-776163 | - |

SCALE 4:1 SHEET 1 OF 1 REV J3

4806 (3/11)
Pro/ENGINEER DRAWING