DRAWING MADE IN THIRD ANGLE PROJECTION

THIS DRAWING IS UNPUBLISHED. RELEASED FOR PUBLICATION ,19 .

© COPYRIGHT 19 BY AMP INCORPORATED. ALL INTERNATIONAL RIGHTS RESERVED.

LOC	DIST	P	F
G	14		

REVISIONS

ZONE	LTR	DESCRIPTION	DATE	APPD
	G	REV 0L20-0025-97	30JAN97	ME TM

AMP WIRE RANGE	UL Listed	CSA LR7189 Certified
22-16 AWG SOLID OR STRANDED	22-16 AWG SOLID OR STRANDED	22-16 AWG SOLID OR STRANDED

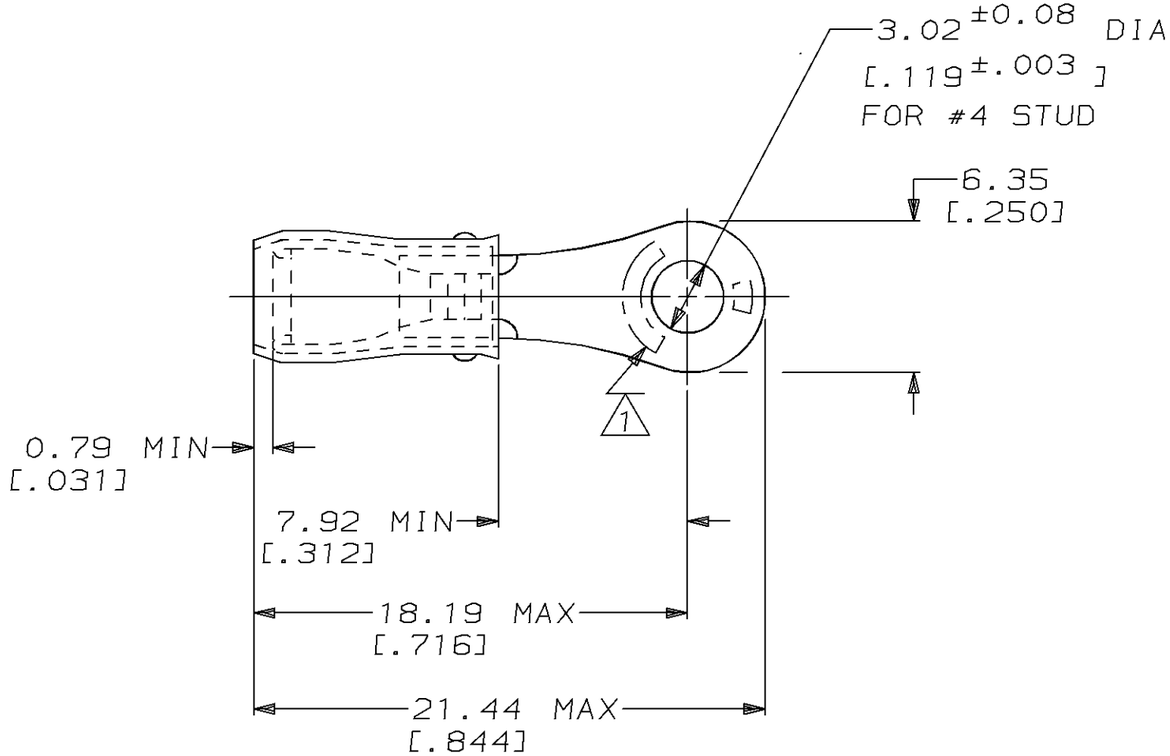

1. STAMP AMP 22-18* 1-2 APPROX AS SHOWN 22-16 TERMINALS ARE STAMPED 22-18 IN ACCORDANCE WITH MILITARY SPEC MIL-T-7928 COMMERCIAL WIRE RANGE IS 22-16
2. WIRE INSULATION DIA: .080 - .125
3. TONGUE MATERIAL THK: $0.79^{\pm 0.05}$ [$.031^{\pm .002}$]

MILITARY P/N AND CLASS	QUANTITY	PACKAGE TYPE	PART NO
-	5000	ON TAPE, REEL	2-323758-1
-	-	LOOSE PIECE	323758

AMP INCORPORATED
CUSTOMER SERVICE SYSTEMS

FOR ADDITIONAL PRODUCT INFORMATION OR COPIES OF DRAWINGS AND TECHNICAL DOCUMENTS	PRODUCT INFORMATION CENTER 1-800-522-6752
FOR APPLICATION TOOLING INFORMATION	TOOLING ASSISTANCE CENTER 1-800-722-1111
FOR ORDER ENTRY	1-800-526-5142

MAX RECOMMENDED OPERATING TEMPERATURE: 105°C MAX

VOLTAGE RATING: 300 V MAX

WIRE CROSS SECTIONAL AREA RANGE: 0.26-1.65mm² [509-3,260] CIR MILS SOLID OR STRANDED

THIS DRAWING IS A CONTROLLED DOCUMENT FOR AMP INCORPORATED. IT IS SUBJECT TO CHANGE AND THE CONTROLLING ENGINEERING ORGANIZATION SHOULD BE CONTACTED FOR THE LATEST REVISION.

DO NOT SCALE PRINT.
UNLESS SPECIFIED
DIMENSIONS IN mm [INCHES]
TOLERANCES ON:
2 PLC DEC ± 0.20[.008]
3 PLC DEC ± -
ANGLES ± -

MATERIAL: COPPER PER ASTM B-152 SLEEVE, RED NYLON

FINISH: TIN PLATE PER MIL-T-10727

DR	02/11/93	DK SCHRUM
CHK	4/28/93	RE HERSEY
APPD	4/28/93	ML ELLIS
APPD	4/28/93	M BARNABA

PRODUCT SPEC: UL 486A

APPLICATION SPEC: NOT AVAILABLE

WEIGHT: -

AMP Incorporated
Harrisburg, PA 17105-3608

NAME: TERMINAL, RING TONGUE, PIDG™, WIRE SIZE, 22-16 AWG

SIZE	CAGE CODE	DRAWING NO
B	00779	C-323758

SCALE 4:1 SHEET 1 OF 1

CUSTOMER DRAWING