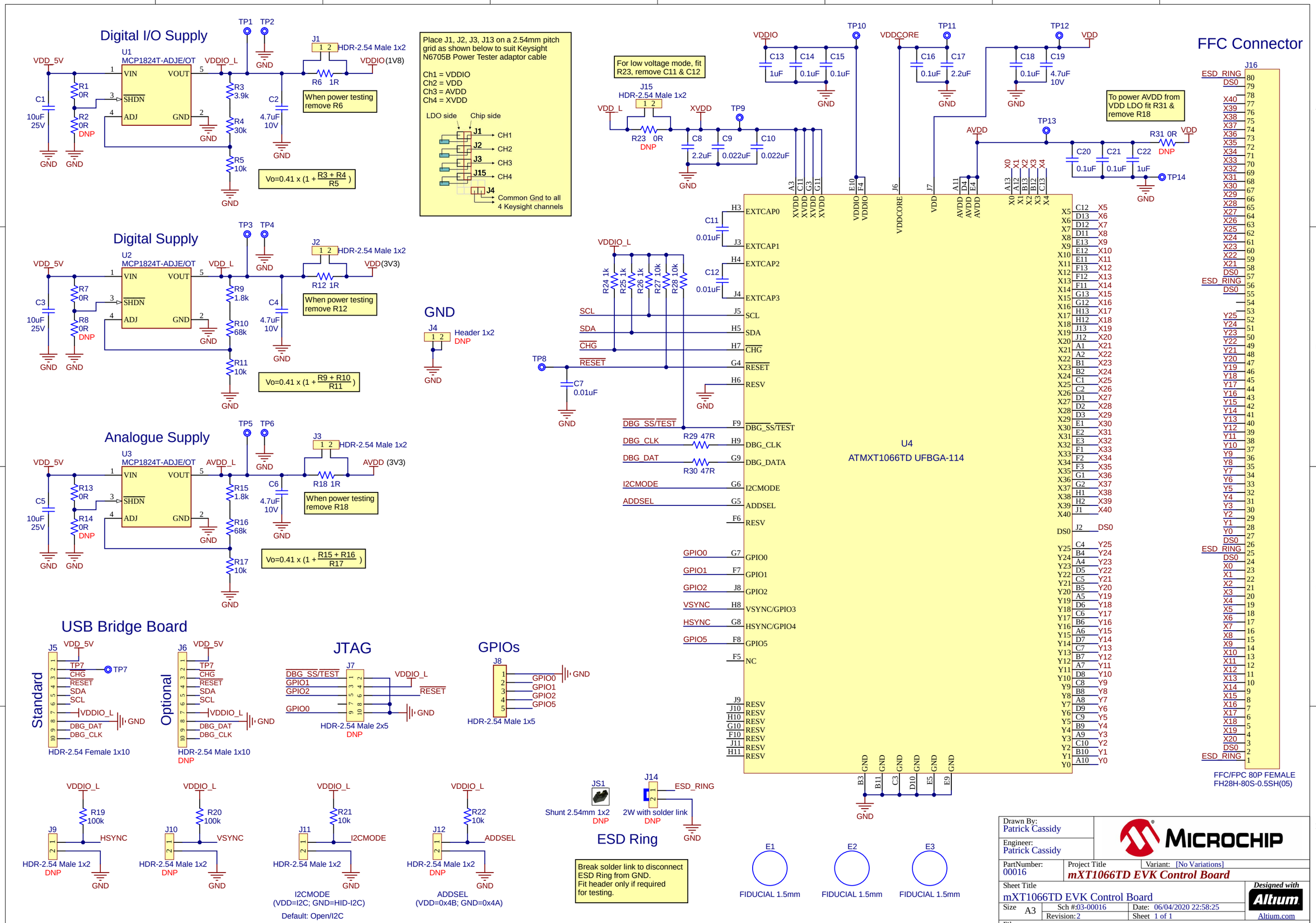
Digital I/O Supply
U1
MCP1824T-ADJE/OT
VDD_5V
VDDIO_L
VIN
VOUT
SHDN
ADJ
GND
C1
10uF
25V
R1
0R
R2
0R
DNP
R3
3.9k
R4
30k
R5
10k
C2
4.7uF
10V
TP1
TP2
J1
HDR-2.54 Male 1x2
VDDIO (1V8)
R6 1R
When power testing remove R6
Vo=0.41 x (1 + R3 + R4 / R5)
Place J1, J2, J3, J13 on a 2.54mm pitch grid as shown below to suit Keysight N6705B Power Tester adaptor cable
Ch1 = VDDIO
Ch2 = VDD
Ch3 = AVDD
Ch4 = XVDD
LDO side
Chip side
J1
J2
J3
J15
J4
CH1
CH2
CH3
CH4
Common Gnd to all 4 Keysight channels
Digital Supply
U2
MCP1824T-ADJE/OT
VDD_5V
VDD_L
R7
0R
R8
0R
DNP
R9
1.8k
R10
68k
R11
10k
C3
10uF
25V
C4
4.7uF
10V
TP3
TP4
J2
HDR-2.54 Male 1x2
VDD (3V3)
R12 1R
When power testing remove R12
Vo=0.41 x (1 + R9 + R10 / R11)
Analogue Supply
U3
MCP1824T-ADJE/OT
VDD_5V
AVDD_L
R13
0R
R14
0R
DNP
R15
1.8k
R16
68k
R17
10k
C5
10uF
25V
C6
4.7uF
10V
TP5
TP6
J3
HDR-2.54 Male 1x2
AVDD (3V3)
R18 1R
When power testing remove R18
Vo=0.41 x (1 + R15 + R16 / R17)
GND
J4
Header 1x2
DNP
For low voltage mode, fit R23, remove C11 & C12
J15
HDR-2.54 Male 1x2
VDD_L
R23 0R
DNP
XVDD
TP9
C8
2.2uF
C9
0.022uF
C10
0.022uF
VDDIO
C13
1uF
C14
0.1uF
C15
0.1uF
TP10
VDDCORE
C16
0.1uF
C17
2.2uF
TP11
TP12
VDD
C18
0.1uF
C19
4.7uF
10V
To power AVDD from VDD LDO fit R31 & remove R18
AVDD
TP13
C20
0.1uF
C21
0.1uF
C22
1uF
TP14
R31 0R
DNP
C11
0.01uF
C12
0.01uF
R24 1k
R25 1k
R26 1k
R27 10k
R28 10k
SCL
SDA
CHG
RESET
TP8
C7
0.01uF
DBG_SS/TEST
DBG_CLK
DBG_DAT
R29 47R
R30 47R
I2CMODE
ADDSEL
GPIO0
GPIO1
GPIO2
VSYNC
HSYNC
GPIO5
EXTCAP0
EXTCAP1
EXTCAP2
EXTCAP3
RESV
NC
U4
ATMXT1066TD UFBGA-114
FFC Connector
J16
FFC/FPC 80P FEMALE
FH28H-80S-0.5SH(05)
USB Bridge Board
Standard
J5
HDR-2.54 Female 1x10
Optional
J6
HDR-2.54 Male 1x10
DNP
TP7
CHG
RESET
SDA
SCL
VDDIO_L
DBG_DAT
DBG_CLK
JTAG
J7
HDR-2.54 Male 2x5
DNP
DBG_SS/TEST
GPIO1
GPIO2
GPIO0
GPIOs
J8
HDR-2.54 Male 1x5
GPIO0
GPIO1
GPIO2
GPIO5
J9
R19
100k
HSYNC
HDR-2.54 Male 1x2
DNP
J10
R20
100k
VSYNC
J11
R21
10k
I2CMODE
(VDD=I2C; GND=HID-I2C)
Default: Open/I2C
J12
R22
10k
ADDSEL
(VDD=0x4B; GND=0x4A)
JS1
Shunt 2.54mm 1x2
DNP
J14
ESD_RING
2W with solder link
DNP
ESD Ring
Break solder link to disconnect ESD Ring from GND.
Fit header only if required for testing.
E1
E2
E3
FIDUCIAL 1.5mm
Drawn By: Patrick Cassidy
Engineer: Patrick Cassidy
PartNumber: 00016
Project Title
Variant: [No Variations]
mXT1066TD EVK Control Board
Sheet Title
mXT1066TD EVK Control Board
Size A3
Sch #:03-00016
Revision: 2
Date: 06/04/2020 22:58:25
Sheet 1 of 1
File: 00016.SchDoc
Designed with Altium
Altium.com