THIS DRAWING IS UNPUBLISHED. RELEASED FOR PUBLICATION APRIL ,2004.
© COPYRIGHT 2004 BY TYCO ELECTRONICS CORPORATION. ALL RIGHTS RESERVED.

LOC	DIST
E	B

REVISIONS

P	LTR	DESCRIPTION	DATE	DWN	APVD
	A	EBD0-0035-03	06FEB04	RS	FWK

NOTES:

1. SINGLE PACK IN ACCORDANCE WITH SPEC 107-3275
2. 100 TRAY PACK IN ACCORDANCE WITH SPEC 107-3275
3. 0.08μm Au PLATING OVER 1.27μm Ni PLATING
4. 0.08μm Au PLATING OVER 1.27μm Ni PLATING OVER 0.76μm Cu PLATING
5. 0.76μm Au PLATING OVER 1.27μm Ni PLATING OVER 0.76μm Cu PLATING
6. PASSIVATED
7. WHITE BRONZE PLATING
8. FOR TECHNICAL DATA REFER TO YOUR LOCAL TYCO ELECTRONICS SALES OFFICE
9. ALL DIMENSIONS ARE NOMINAL FOR REFERENCE ONLY UNLESS OTHERWISE STATED

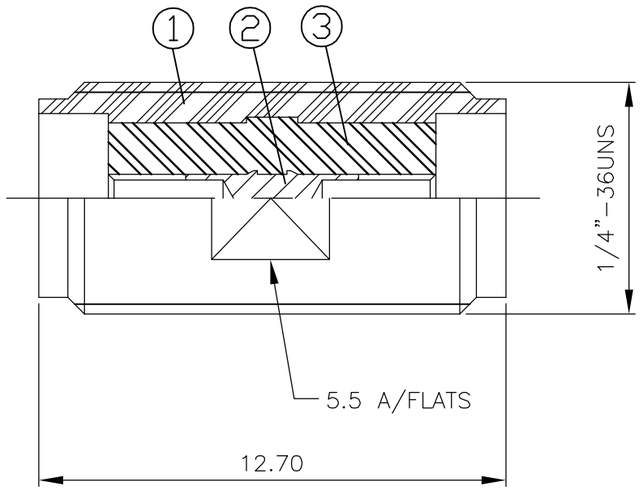

4--1	4--0	3--1	3--0	2--1	2--0	1--1	1--0	MATERIAL	DESCRIPTION	ITEM
1	1	1	1	1	1	1	1	PTFE	INSULATOR	3
1	1	1	1	1	1	1	1	BRASS (5)	CENTER CONTACT	2
1	1	–	–	–	–	–	–	BRASS (7)	SHELL	1
–	–	1	1	–	–	–	–	BRASS (4)	SHELL	1
–	–	–	–	1	1	–	–	STAINLESS STEEL (6)	SHELL	1
–	–	–	–	–	–	1	1	STAINLESS STEEL (3)	SHELL	1
(2)	(1)	(2)	(1)	(2)	(1)	(2)	(1)			

QUANTITY PER ASSY — PARTS LIST

THIS DRAWING IS A CONTROLLED DOCUMENT.

DIMENSIONS: mm

TOLERANCES UNLESS OTHERWISE SPECIFIED:
0 PLC ± –
1 PLC ± –
2 PLC ± –
3 PLC ± –
4 PLC ± –
ANGLES ± –

MATERIAL: SEE TABLE

FINISH: –

DWN R.SMITH 06FEB04
CHK S.PARLOW 06FEB04
APVD F.WHEELER-KING 06FEB04
PRODUCT SPEC –
APPLICATION SPEC –
WEIGHT –

tyco Electronics
Tyco Electronics Corporation
Bideford, UK, EX39 4HE

NAME: SMA STRAIGHT ADAPTOR JACK – JACK
–
–

SIZE	CAGE CODE	DRAWING NO	RESTRICTED TO
A3	00779	C-1478980	–

CUSTOMER DRAWING

SCALE 1:1 SHEET 1 OF 1 REV A