FIBOX MINI PG

POLYCARBONATE ENCLOSURES

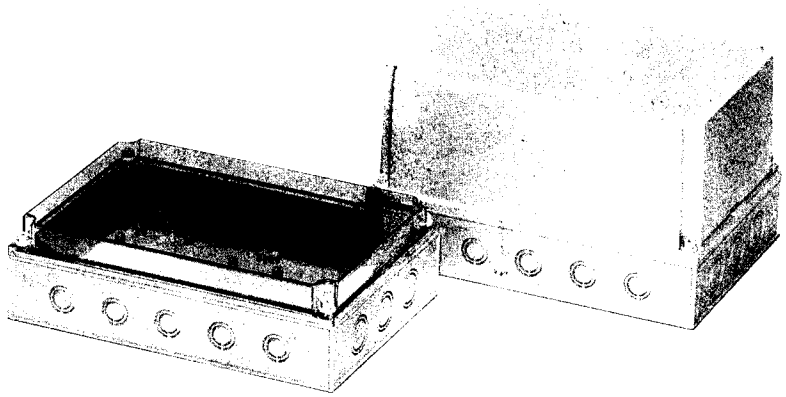

MI 200

175x250 mm

IP 67

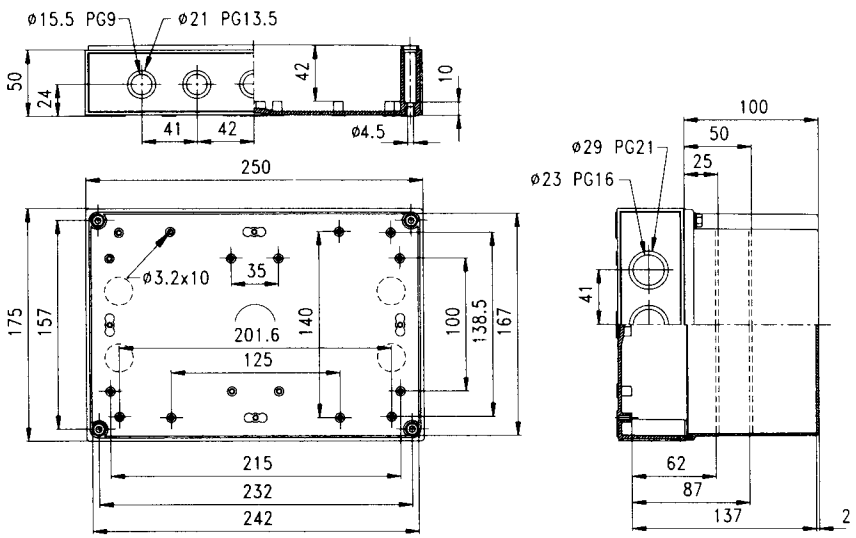

COMPLETE ENCLOSURE ORDERING SYMBOLS:

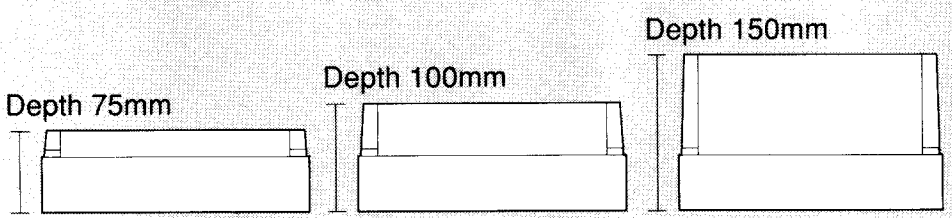

MI 200/75 G
MI 200/75 T

MI 200/100 G
MI 200/100 T

MI 200/150 G
MI 200/150 T

MI 200

Include:
Enclosure base,
cover (T=transparent, G= grey),
4 cover screws.

MINI 200 ACCESSORIES	SYMBOLS
Mounting plate 223x148 mm	MIV 200
Rail, 150 mm ⊔ TS 35 (EN 50022)	MIV 15
Rail, 225 mm ⊔ TS 35 (EN 50022)	MIV 20
Rail, 155 mm ⊏⊐ TS 32 (EN 50035)	MIV 14
Rail, 235 mm ⊏⊐ TS 32 (EN 50035)	MIV 19

ALL OTHER ACCESSORIES ON PAGE 33