Ball screw axes ELGD-BS-WD

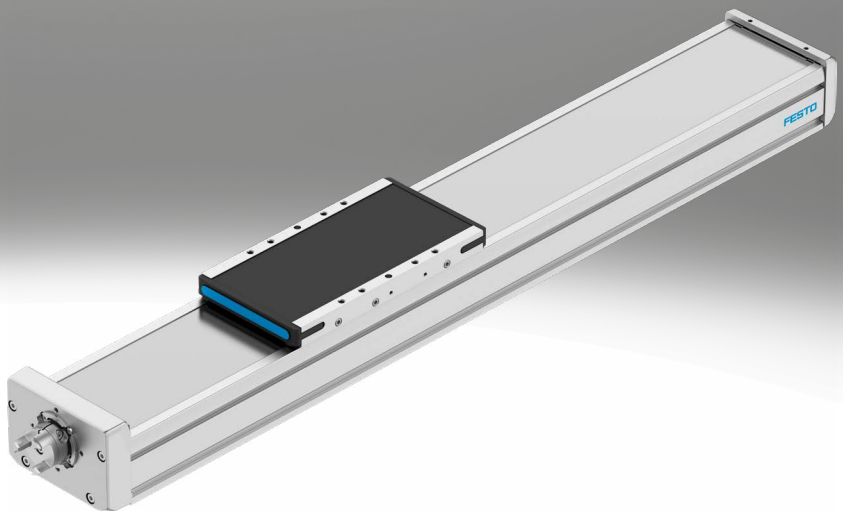

Key features

At a glance

ELGD-BS (standard design)
- Profile with a square cross section and sturdy drive elements for high feed forces
- With NSF-H1 lubricant for the food zone
- Suitable for the production of Li-ion batteries

ELGD-BS-WD (wide design)
- Reduced profile height offers smaller installation dimensions for handling systems and applications that do not require such high feed forces
- 30% lighter, while rigidity and guide load capacity are still similar to the axis in the standard design
- With NSF-H1 lubricant for the food zone
- Suitable for the production of Li-ion batteries

Innovative guide technology
- Excellent rigidity and load capacity of the guide for greater loads in the same installation space
- Less vibration and smoother slide movement protect sensitive workpieces
- High speeds ensure short cycle times and a very long service life minimises downtime

Powerful drive elements
- High feed forces and acceleration for shorter process times
- Long service life and increased reliability reduce TCO

Innovative stainless steel cover strip solution
- Abrasion-free and clean surface protects workpieces from particles
- Minimised number of particles for use in cleanrooms
- Reduced ingress of dirt for use in harsh ambient conditions

Options:
- Extended or additional slide for higher axial and lateral torques and higher loads

Sealing air connection:
- Air is exchanged between the interior of the cylinder and the environment via the sealing air connection. This prevents negative pressure or excess pressure from building up inside the cylinder.
- Application of slight negative pressure prevents the emission of particles
- Application of slight excess pressure prevents the ingress of particles

Guide axis ELFD

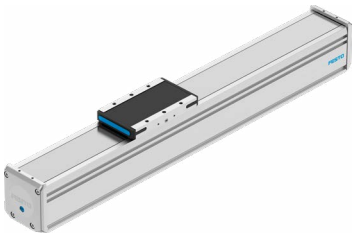

- Driveless linear guide units with guide and freely movable slide
- The guide axis is designed to support forces and torques in multi-axis applications

Key features

Engineering tools

More information ➔ electric-motion-sizing

Save time with smart engineering tools for the optimal solution. Our goal is to increase your productivity. Our engineering tools play an integral part in achieving this goal. They help you size your system correctly, tap into unimagined productivity reserves and generate additional productivity along the entire value chain. In every phase of your project, from the initial contact to the modernisation of your machine, you will come across a number of different tools and useful tools.

Electric Motion Sizing

- Create the optimum drive package quickly and reliably. Electric Motion Sizing calculates suitable combinations of electric axis, electric motor and servo drive using just a few application details. It provides you with all the relevant data including the bill of materials and documentation for the selected combination. This avoids design errors and results in significantly improved energy efficiency for the system. A smooth connection to the Festo Automation Suite also makes commissioning easier for you.

Graphs

More information ➔ elgd-bs

The graphs shown in this document are also available online. These can be used to display precise values.

Orientation guide

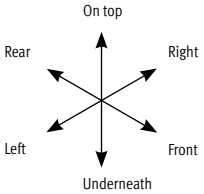

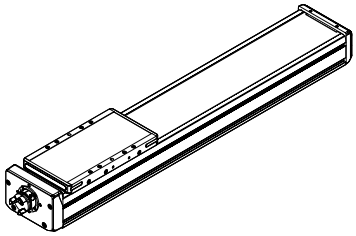

- The side on which the labelling is applied is defined as the front.

Drive system

[BS]	Ball screw

- For applications requiring precision
- High reliability and long service life
- For high loads

Stroke reserve

- The stroke reserve is a safety distance from the mechanical end position and is not used in normal operation.
- The sum of the stroke length and 2x stroke reserve must not exceed the maximum working stroke.

Screw pitch

The screw pitch describes the distance travelled by the ball screw nut per revolution of the ball screw in millimetres.

Ball screw support

The ball screw support enables maximum travel speed with all stroke lengths.

Key features

Slide design

[L] Long

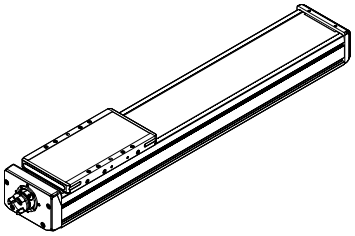

Additional slide

[ZR] Right

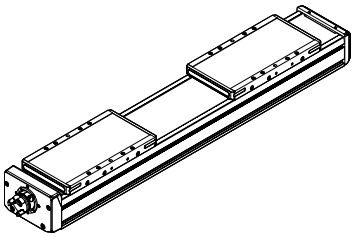

[ZL] Left

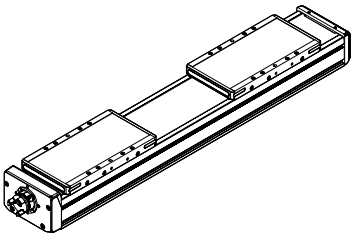

Lubrication

[ ] Standard

- With lifetime lubrication (this applies under standard conditions. Please refer to the operating manual for maintenance intervals for specific applications)
- Lubrication nipple not included in delivery

[GN] Lubrication nipple

- The lubrication adapters enable the guide to be permanently lubricated using semi- or fully automatic relubrication devices
- The adapters are suitable for oils and greases

Type of mounting

[M] Direct mounting

- When direct mounting is selected, the axis is supplied with threads in the underside of the profile. It can then be mounted without profile mountings, which saves space
- Additional centring holes make it easy to install the axis in the machine

[M7] Type of mounting for front end use

- Attachments can be fitted on the front of the axis using the front-end mounting feature
- Threads are therefore integrated into the underside of the profile on the side facing away from the motor; this, together with an angle kit, makes for stable front-end assembly

Measurement system

[M3] With displacement encoder

The position of the slide can be sensed directly when using the incremental displacement encoder. This means that all elasticities of the drivetrain can be detected and corrected by the motor controller

Type codes

001	Series	
ELGD	Gantry axis	

002	Drive system	
BS	Ball screw drive	

003	Guide	
KF	Recirculating ball bearing guide	

004	Design type	
WD	Wide	

005	Size	
100	100	
120	120	

006	Stroke [mm]	
100	100	
200	200	
300	300	
400	400	
500	500	
600	600	
800	800	
1000	1000	
...	50 ... 1500	

007	Stroke reserve	
0H	None	
...H	0 ... 999 mm	

008	Ball screw pitch	
5P	5 mm	
10P	10 mm	
20P	20 mm	

009	Ball screw support	
	None	
SU	With	

010	Slide design	
L	Slide, long	

011	Additional slide	
	None	
ZL	1 slide left	
ZR	1 slide right	

012	Lubrication	
	Standard	
GN	Lubrication nipple	

013	Type of mounting	
	Profile slots with clamping jaws	
M	Direct mounting	
M7	Mounting type for front end use	

014	Displacement encoder	
	None	
M3	With displacement encoder, incremental, resolution 2.5 µm, 10... 30 V	

015	Displacement encoder attachment position	
	None	
B	Rear	
F	Front	

Datasheet

General technical data						
Size		100			120	
Screw pitch	[mm/rev]	5	10	20	5	10
Design		Electromechanical axis with ball screw				
Guide		Recirculating ball bearing guide				
Mounting position		Any				
Working stroke						
ELGD-...	[mm]	50 ... 1000			50 ... 1500	
ELGD-...-M/-M7	[mm]	50 ... 1000			50 ... 1370	
Max. feed force F_x						
With axial kit	[N]	1100	1100	1100	1880	1880
With parallel kit	[N]	1100	1100	1100	1880	1880
No-load torque	[Nm]	0.11	0.051	0.161	0.104	0.147
at low travel speed:	[m/s]	0.05	0.05	0.05	0.05	0.05
No-load torque	[Nm]	0.26	0.077	0.491	0.213	0.39
at min. travel speed	[m/s]	0.25	0.5	1.0	0.25	0.5
Max. radial force[1)]	[N]	180	180	180	230	230
Max. rotational speed[2)]	[rpm]	8000	8000	8000	6667	6667
Max. speed	[m/s]	0.66	1.33	2.67	0.56	1.11
Max. acceleration	[m/s²]	15				
Repetition accuracy	[mm]	±0.01				
Reversing backlash	[mm]	0.15				
Position sensing		Via proximity switch				

1) At the drive shaft
2) Rotational speed and velocity are stroke-dependent

Weight [g]			
Size		100	120
Basic weight with 0 mm stroke[1)]		2979	5290
Additional weight per 10 mm stroke		59	86
Moving mass		1185	2200

1) Including slide

Ball screw			
Size		100	120
Diameter	[mm]	10	12
Pitch	[mm/rev]	5/10/20	5/10

Homing

Homing can be carried out in two ways:

- Against a fixed stop
- Using a reference switch

The following values must be observed:

Size		100	120
Max. impact energy	[mJ]	1	1
Note on the impact energy in the end positions	[m/s]	At maximum homing speed of 0.01 m/s	

Datasheet

Operating and environmental conditions		
Ambient temperature[1]	[°C]	0 ... +60
Degree of protection		IP40
Duty cycle	[%]	100
Maintenance interval[2]		Lifetime lubrication

1) Note operating range of proximity switches
2) This information applies under standard conditions. Please refer to the operating manual for maintenance intervals for specific applications.

Cleanroom suitability

The axis ELGD is designed for cleanroom applications and tested under typical operating conditions. The ISO class is determined using standardised testing procedures in which particle emissions are measured for several hours until stable values are reached. The classification of the cleanroom class is carried out according to ISO 14644 14 using reliable statistical methods. The tests are carried out with 100% duty cycle. The ISO class is determined over a period of 100 minutes to obtain reliable performance data.
The standard grease used in the ELGD has a low particle emission and is therefore well suited for cleanroom applications.
Our engineering team can carry out a detailed assessment for applications with specific cleanroom requirements and recommend an optimal configuration that is tailored to your process.

Size	100	120
Suitable for cleanrooms, measured according to ISO 14644-14	ISO class 4 (vacuum) ISO class 7	

1) In order to achieve the required ISO class, the axis must be cleaned and correctly prepared before commissioning.

ISO class			4			5				6				7			
Speed		[m/s]	0.1	0.2	0.5	0.1	0.2	0.5	1	0.1	0.2	0.5	1	0.1	0.2	0.5	1
	For size																
Required vacuum flow rate	100	[l/min]	10	20	50	10	20	50	*	0	10	30	*	0	0	10	*
	120	[l/min]	10	10	30	10	10	30	80	0	0	10	50	0	0	0	30

* Not measured
** Not reached

Mass moment of inertia						
Size		100			120	
Screw pitch	[mm/rev]	5	10	20	5	10
J_O	[kg mm²]	5.632	5.632	5.632	9.61	9.47
J_H per metre stroke	[kg mm²/m]	7.554	7.554	7.554	13.5	13
J_L per kg effective load	[kg mm²/kg]	0.633	2.533	10.1	0.633	2.533

The mass moment of inertia J_A of the entire axis is calculated as follows:

$$J_A = J_O + J_H \times \text{working stroke [m]} + J_L \times m_{\text{effective load}} \text{ [kg]}$$

Datasheet

Materials

Axis	
Drive cover	Gravity die-cast aluminium, painted
Ball screw nut	Steel
Ball screw	Steel
Slide	Wrought aluminium alloy
Cover strip	High-alloy stainless steel
Guide	Steel
Profile	Anodised wrought aluminium alloy
Note on materials	RoHs-compliant
LABS (PWIS) conformity	VDMA24364-C1-L
Suitable for the production of Li-ion batteries	Suitable for battery production with reduced Cu/Zn/Ni values (F1a)

Technical data – Displacement encoder		
Type		ELGD-...-M3
Resolution	[µm]	2.5
Max. travel speed with displacement encoder	[m/s]	7
Supply voltage	[VDC]	10 – 30 (±10%)
Current	[mA]	Max. 150
Encoder signal		5 V TTL; A/A, B/B; reference signal (N/N) cyclically every 5 mm (zero pulse)
Signal output		Line driver, alternating, resistant to sustained short circuit
Electrical connection		8-pin plug connector, round design, M12
Cable length	[mm]	160

Operating and environmental conditions – Displacement encoder		
Ambient temperature	[°C]	–10 ... +70
Degree of protection		IP64
CE marking (see declaration of conformity)		To EU EMC Directive[1])

1) For information about the area of use, see the EC declaration of conformity at: www.festo.com/sp ➔ Certificates.
If the devices are subject to usage restrictions in residential, commercial or light-industrial environments, further measures for the reduction of the emitted interference may be necessary.

Datasheet

Load values

The indicated forces and torques refer to the centre of the guide. The point of application of force is the point where the centre of the guide and the longitudinal centre of the slide intersect.
The appropriate size is selected using the following three steps:
1. Check the maximum permissible values (must not be exceeded)
2. Calculate the load comparison factor
3. Determine the service life

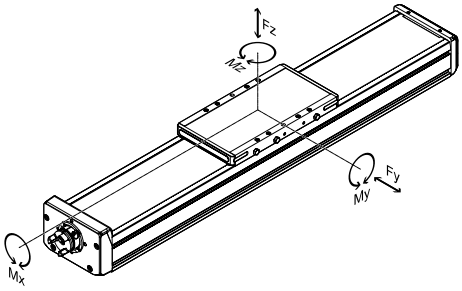

Distance from the slide surface to the centre of the guide

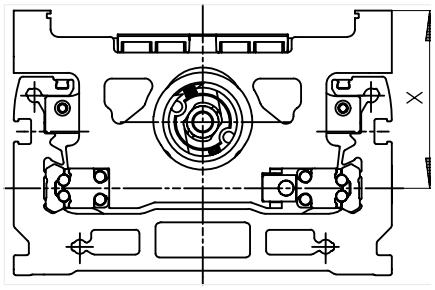

Distance from the slide surface to the centre of the guide			
Size		100	120
Dimension x	[mm]	47	51

1. Check the maximum permissible values

Max. permissible forces and torques for the overall axis (strength limits)			
Size		100	120
Max. force Fy, overall axis	[N]	4092	5914
Max. force Fz, overall axis	[N]	2250	5280
Max. torque Mx, overall axis	[Nm]	160	290
Max. torque My, overall axis	[Nm]	191	590
Max. torque Mz, overall axis.	[Nm]	191	527

Maximum permissible support spacing L as a function of force F

The axis may need to be supported in order to limit deflection in the case of long strokes.
The following graphs can be used to determine the maximum permissible support spacing L as a function of force F acting on the axis. The deflection is f = 0.5 mm.

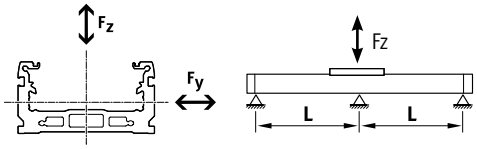

Size 100

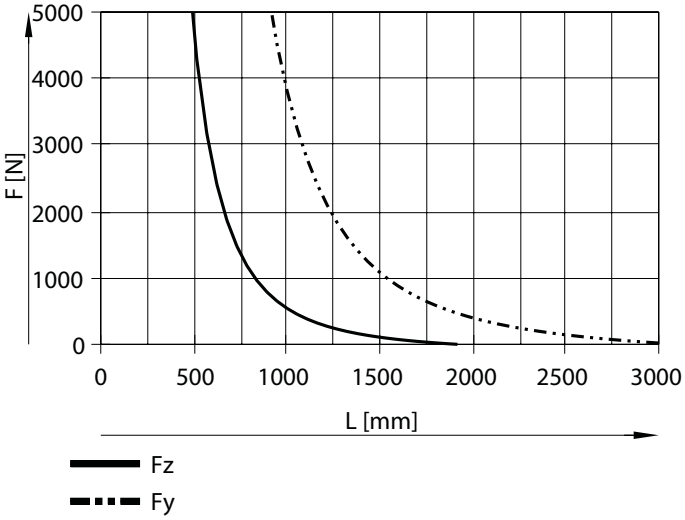

Size 120

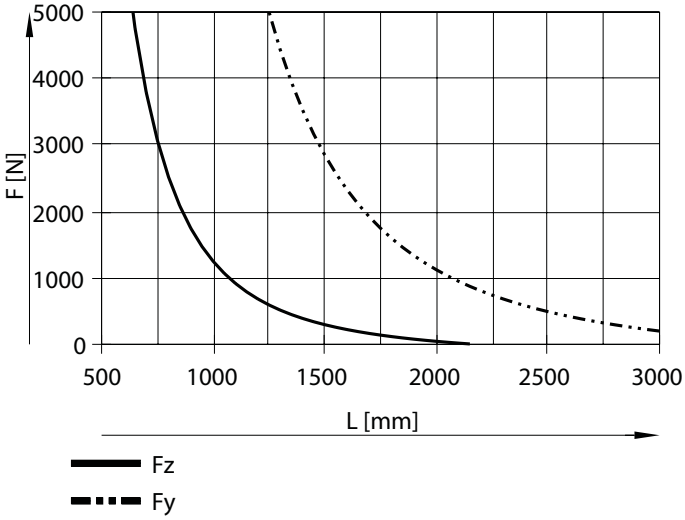

Datasheet

2. Calculate the load comparison factor

Note

For a guide system to have a service life of 5000 km, the load comparison factor must have a value of fv š 1, based on the maximum permissible forces and torques for a service life of 5000 km.
This formula can be used to calculate a guide value.
The engineering software "Electric Motion Sizing" is available for more precise calculations
➔ www.festo.com/x/electric-motion-sizing

If the axis is subjected to several of the indicated forces and torques at the same time, the following equation must be satisfied in addition to the indicated maximum loads:
Calculating the load comparison factor:

$$f_v = \frac{|F_{y1}|}{F_{y2}} + \frac{|F_{z1}|}{F_{z2}} + \frac{|M_{x1}|}{M_{x2}} + \frac{|M_{y1}|}{M_{y2}} + \frac{|M_{z1}|}{M_{z2}} \leq 1$$

F_1/M_1 = Values occurring in the application
F_2 = Permissible values at 5000 km from the graph "load as a function of support spacing"
M_2 = Maximum permissible values (see table)

Max. permissible torques for the guide calculation with reference service life

Size		100	120
Reference service life	[km]	5000	
Max. torque Mx	[Nm]	140	330
Max. torque My	[Nm]	230	600
Max. torque Mz	[Nm]	220	540

Permissible guide load as a function of the support spacing

Depending on how firmly the axis is supported, the maximum permissible forces vary due to the design of the guide system.
If the axis is used as a cantilever or in yoke operation, the values for a support spacing of 2000 mm can be selected.

Size 100

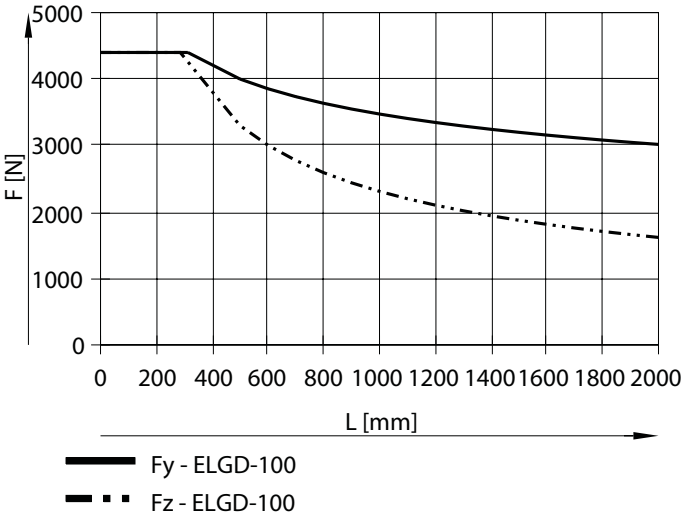

Size 120

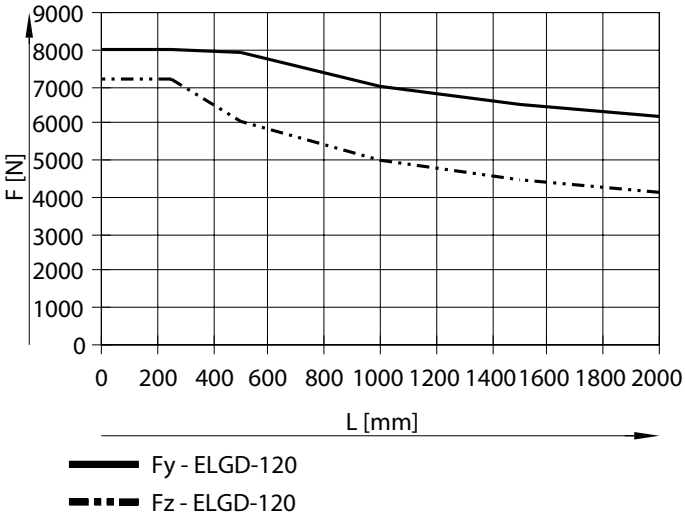

Datasheet

3. Determine the service life

The service life of the guide depends on the load. To be able to provide an indication of the service life of the guide, the graph below plots the load comparison factor fv against the service life.

These values are only theoretical. You must consult your local Festo contact for a load comparison factor fv greater than 1.3.

Load comparison factor f_v as a function of service life l

Example:
A user wants to move an x kg load. Using the formula (➔ page 10) gives a value of 1.3 for the load comparison factor f_v. According to the graph, the guide would have a service life of approx. 2500 km. Reducing the acceleration reduces the Mz and My values. A load comparison factor f_v of 1 now gives a service life of 5000 km.

Note:
If the application has been calculated using "Electric Motion Sizing", the average guide comparison figure represents the workload of the guide.
(100% average guide comparison figure corresponds to fv = 1). With this value, the service life can be estimated using the service life graph

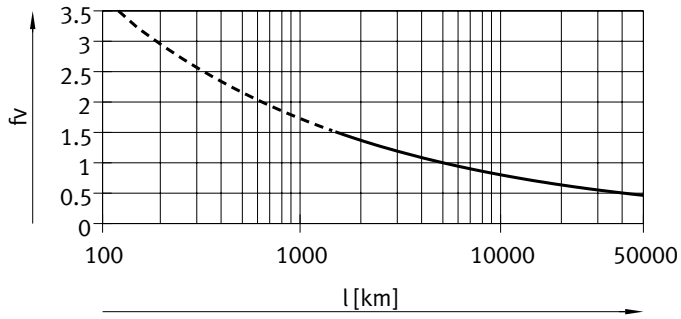

Comparison of the characteristic load values for 100 km with dynamic forces and torques of recirculating ball bearing guides

The characteristic load values of the bearing guides are standardised to ISO and JIS using dynamic and static forces and torques. These forces and torques are based on an expected service life of the guide system of 100 km to ISO or 50 km to JIS.
As the characteristic load values are dependent on the service life, the maximum permissible forces and torques for a 5000 km service life cannot be compared with the dynamic forces and torques of bearing guides to ISO/JIS.

To make it easier to compare the guide capacity of linear axes ELGD with bearing guides, the table below lists the theoretically permissible forces and torques for a calculated service life of 100 km. This corresponds to the dynamic forces and torques to ISO.
These 100 km values have been calculated mathematically and are only to be used for comparing with dynamic forces and torques to ISO. The drives must not be loaded with these characteristic values as this could damage the axes.

Max. permissible forces and torques for a theoretical service life of 100 km (from a guide perspective only)

Size		100	120
$Fy_{max.}$	[N]	18415	35153
Fz_{max}	[N]	18415	35153
$Mx_{max.}$	[Nm]	645	1459
$My_{max.}$	[Nm]	720	1920
$Mz_{max.}$	[Nm]	720	1920

Datasheet

Service life of the ball screw

- The service life of the ball screw axis depends on the service life of the guide as well as that of the drive screw.
  The operating coefficient plays a considerable role in determining the possible service life. It can be determined with the help of the table below
- The distance between the foremost and rearmost positions must be at least 2.5 times the screw pitch per travel cycle
- The specifications for the running performance are based on experimentally determined and theoretically calculated data (at room temperature).
  The running performance that can be achieved in practice can deviate considerably from the specified curves under different parameters

Calculation of the mean feed force F_{xm} with ball screw

$$F_{xm} = \sqrt[3]{\frac{F_{x1}^3 \cdot s_1 + \ldots + F_n^3 \cdot s_n}{s_1 + \ldots + s_n}}$$

F_{xm} = Mean feed force
$F_{x1/n}$ = Feed force of the section
$s_{1/n}$ = Part of the movement cycle that is travel

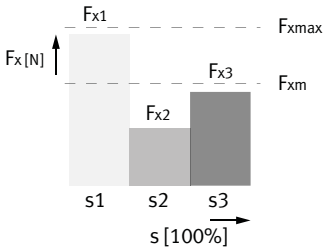

Mean feed force F_{xm} as a function of running performance L, with an operating coefficient f_B of 1.0 at room temperature

Size 100

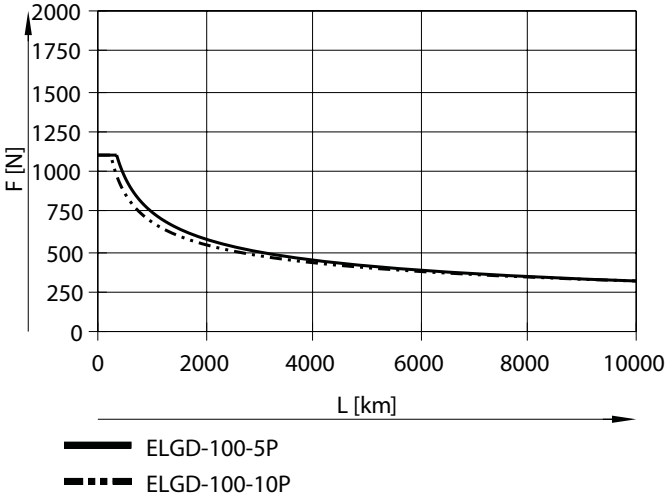

Size 120

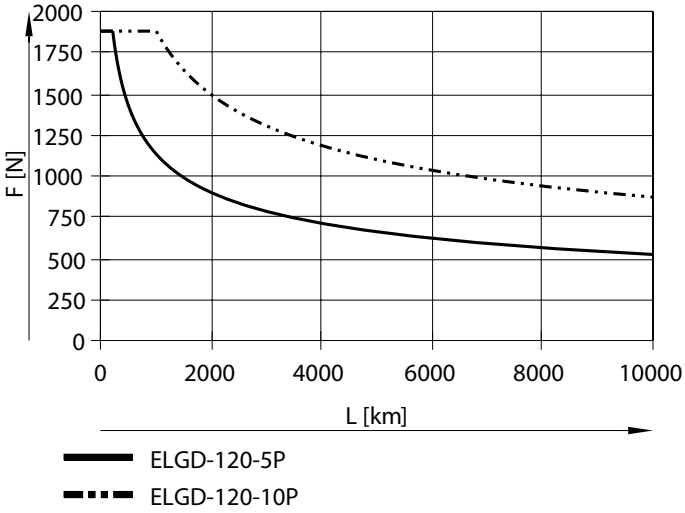

Service life taking into account the operating coefficient

$$L_1 = \frac{L}{f_B^3}$$

L_{ist} = Actual service life
L = Target service life
(➔ graph)
f_B = Operating value

Load[1)]	Operating value f_B	Application example
None	1.0 ... 1.2	Measuring machine
Light	1.2 ... 1.4	Handling, robot technology
Medium	1.4 ... 1.6	Press-in operations
High	1.6 ... 2.0	Construction, agriculture

1) Loads caused by impact, temperature, contamination, shock and vibrations

Datasheet

Max. feed force F as a function of the working stroke l

The feed force that pushes the ball screw in the direction of the motor must be limited depending on the stroke due to possible buckling (e.g. acceleration of a load mass away from the motor, deceleration of a load moving towards the motor).
The feed force in the opposite direction is not affected by this.

Size 100

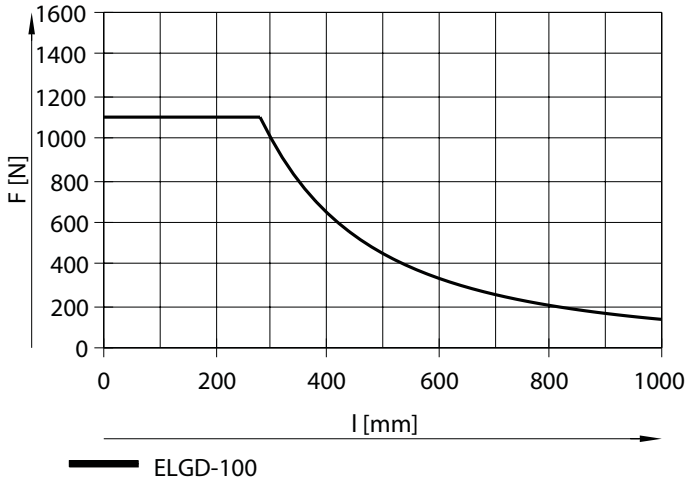

Size 120

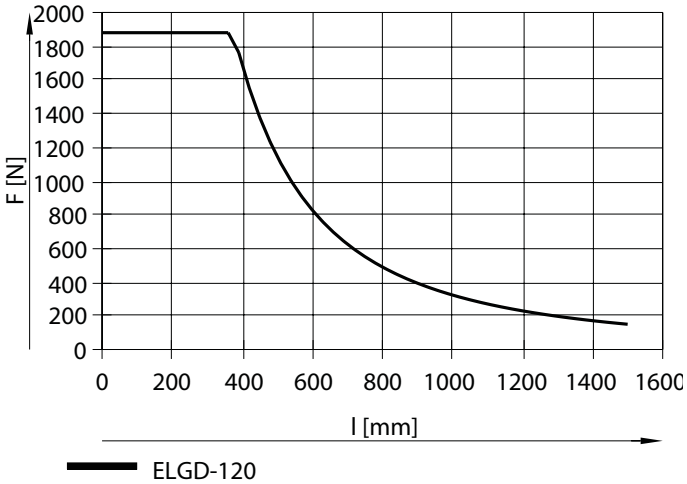

Speed v as a function of working stroke l

Size 100

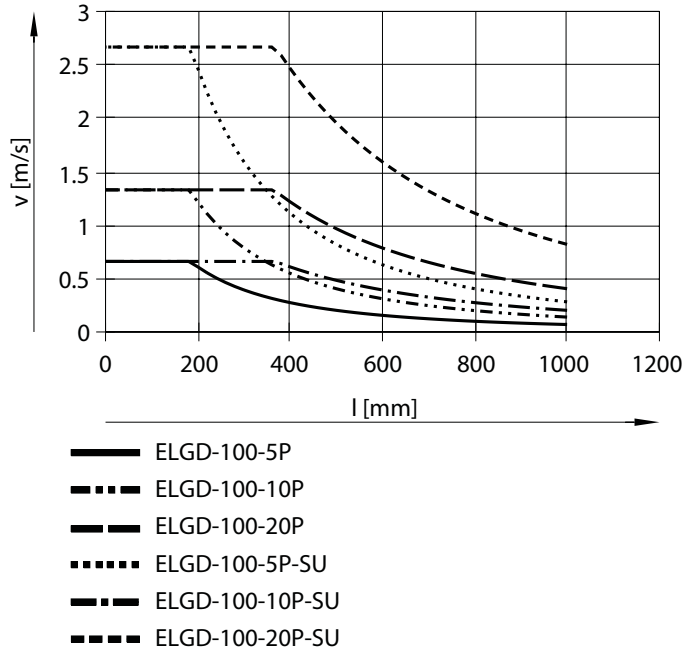

Size 120

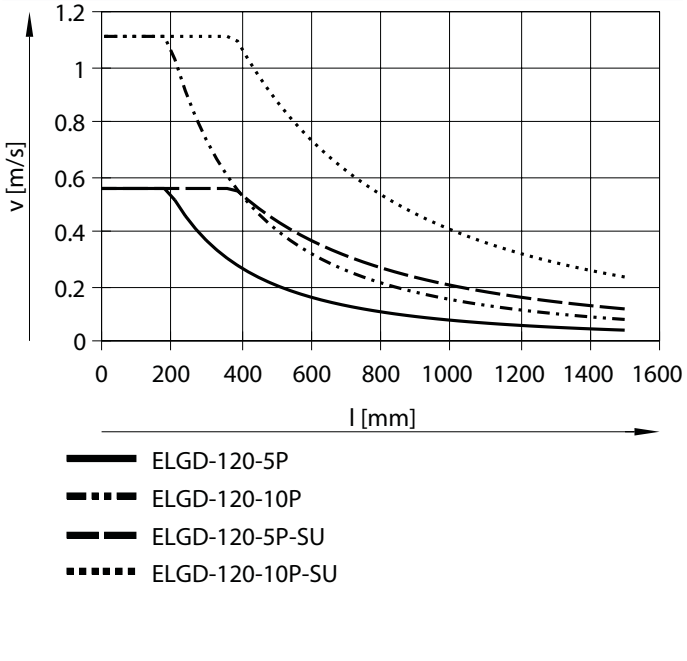

Datasheet

Speed v as a function of rotational speed n

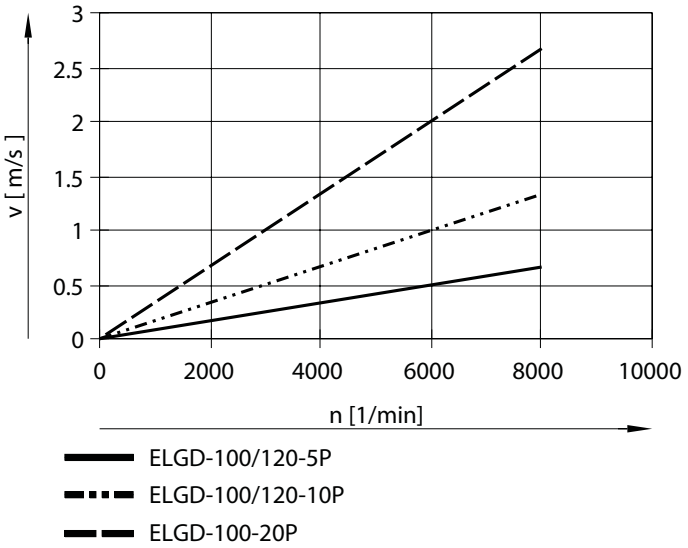

Feed force F as a function of input torque M

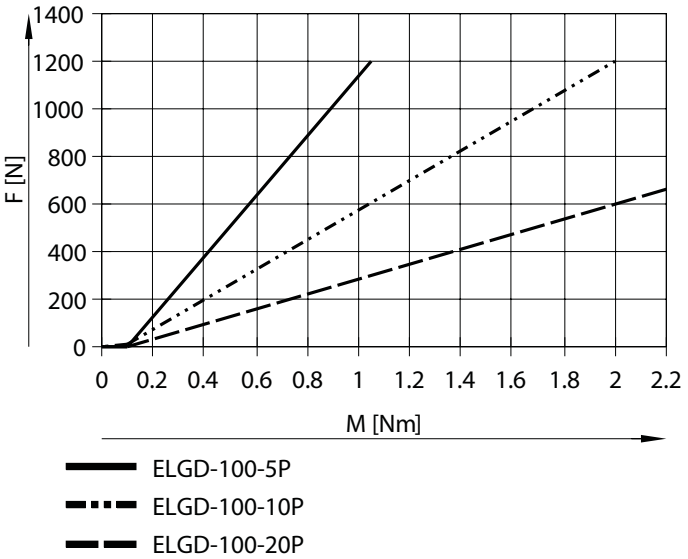

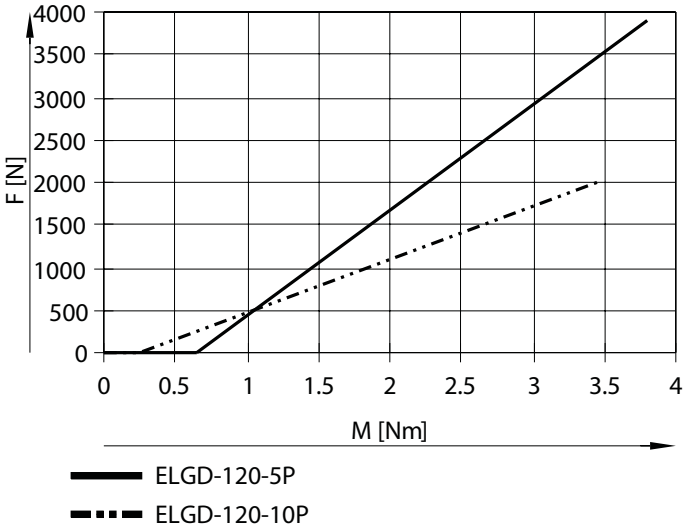

Datasheet

Second moment of area

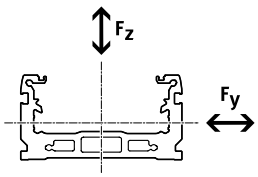

Size		100	120
Iy	[mm⁴]	0.347×10^6	0.771×10^6
Iz	[mm⁴]	2.268×10^6	5.801×10^6

Recommended deflection limit values

Adherence to the following limit values for deflection is recommended to ensure the continuing functionality of the axes. Greater deformation can result in increased friction, greater wear and reduced service life.

Size	Dynamic deflection (moving load)	Static deflection (stationary load)
100, 120	0.05% of the axis length, max. 0.5 mm	0.1% of the axis length

Working stroke reduction

For axis ELGD with additional slide ZL/ZR

For a ball screw axis with additional slide, the working stroke is reduced by the length of the additional slide and the distance between both slides

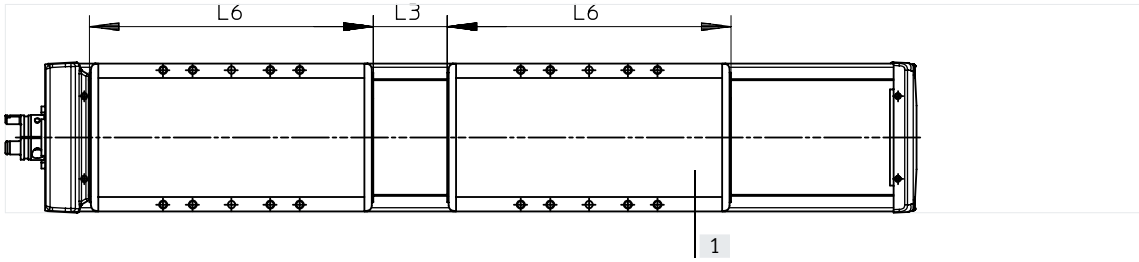

L6 =	Slide length	**Example:**
L6 =	Additional slide length	Type ELGD-BS-KF-WD-100-500-...-ZR
L3 =	Distance between the two slides	Working stroke without Additional slide = 500 mm
[1]	Additional slide	L3 = 50 mm
		L6 = 192 mm
		Working stroke with additional slide = 258 mm
		(500 mm – 50 mm – 192 mm)

Dimensions – Additional slide			
Size		100	120
Length L2	[mm]	192	263
Min. distance between the slides L3	[mm]	≥ 50	≥ 50

Datasheet

Dimensions – ELGD-BS-... Download CAD data ➔ www.festo.com

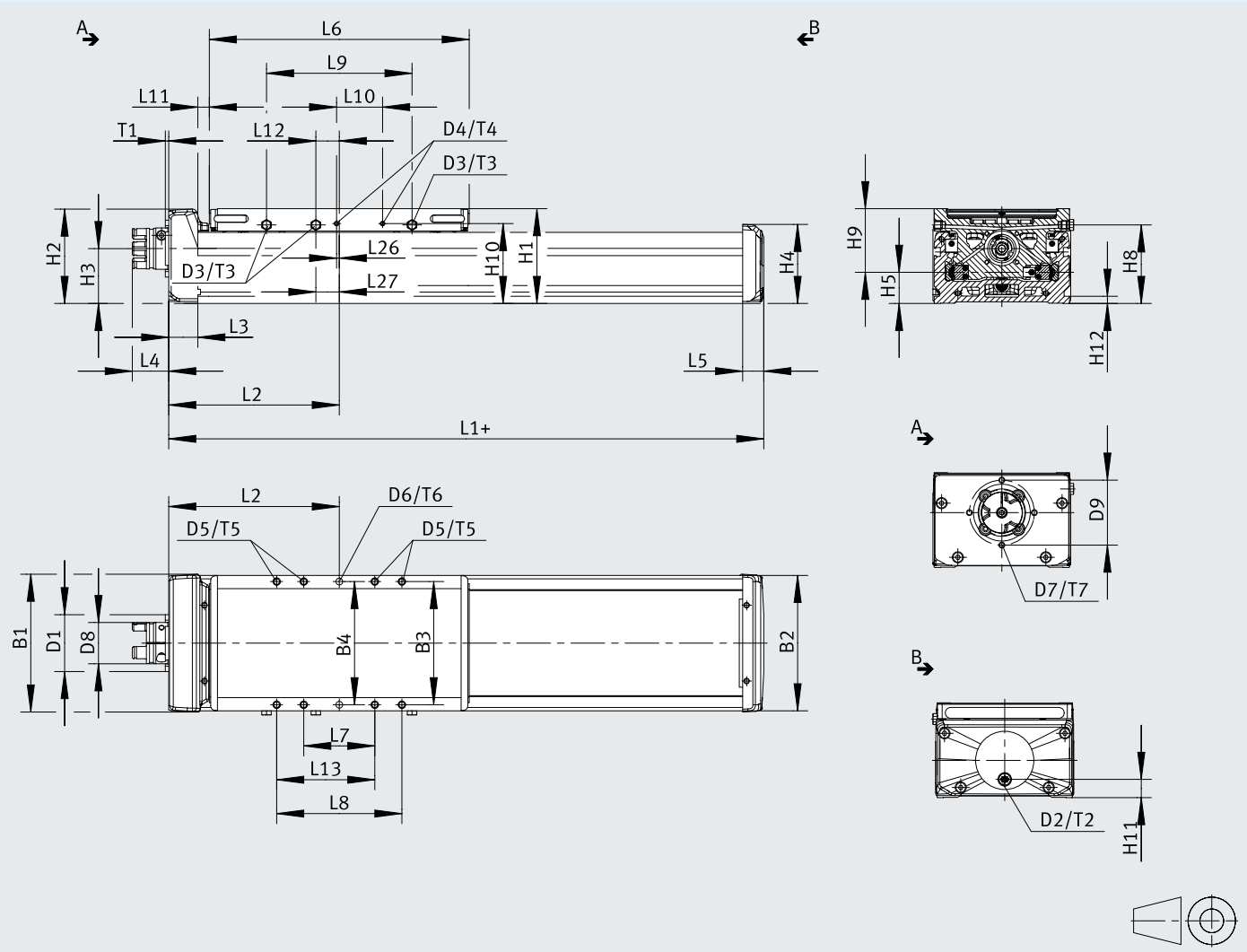

+ = plus stroke length + 2x stroke reserve

	B1	B2	B3	B4 ±0.03	D1 ⌀ f7	D2	D3	D4	D5	D6 ⌀ H7	D7	D8 ⌀	D9 ⌀	H1	H2
ELGD-BS-100 ELGD-BS-100-SU	102	100	91	91	42	G1/8	M6	M3	M5	5	M4	30.5	48	70	70
ELGD-BS-120 ELGD-BS-120-SU	123	120	107	107	42	G1/8	M6	M3	M6	6	M4	30.5	48	82	76.8

	H3	H4	H5	H8	H9	H10	H11	H12	L1	L2 min.	L3	L4	L5	L6	L7 ±0.1	L8 ±0.1
ELGD-BS-100 ELGD-BS-100-SU	40.5	58.5	23	58	47	59	13.5	5.3	239.6	126.5	21.5	26.9	15.6	192	52.5	92.5
ELGD-BS-120 ELGD-BS-120-SU	46.4	69	31	68.5	50.5	69.5	20.4	5.3	313	165	30.5	26.9	13.5	263	92.5	132.5

	L9	L10	L11		L12	L13	L26	L27	T1	T2	T3	T4	T5	T6	T7
			min.	max.											
ELGD-BS-100 ELGD-BS-100-SU	107.5	34	9	9.5	17.3	72.5	2	53.8	2.5	6	6	7	16.5	6 ±0.05	8
ELGD-BS-120 ELGD-BS-120-SU	161	34	3	–	55.5	112.5	17	55.5	2.5	6	6	7	17.5	8 ±0.1	8

Datasheet

Dimensions – ELGD-BS-...-ZR (with additional slide) Download CAD data ➔ www.festo.com

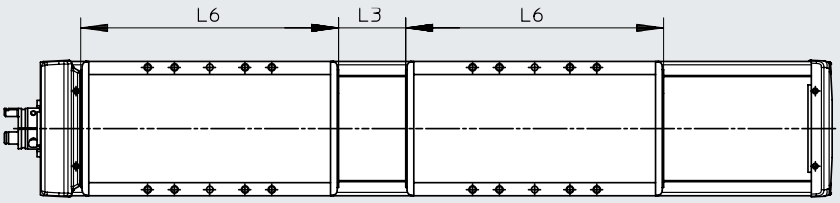

	L3 (Minimum distance)	L6
ELGD-BS-100	50	192
ELGD-BS-120	50	263

Dimensions – ELGD-BS-...- (profile) Download CAD data ➔ www.festo.com

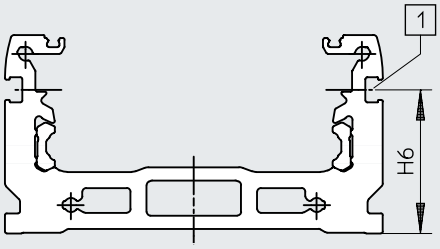

[1] Sensor slot for proximity switch

	H6
ELGD-BS-100	38
ELGD-BS-120	47.4

Datasheet

Dimensions – ELGD-BS-...-M (for direct mounting) Download CAD data ➔ www.festo.com

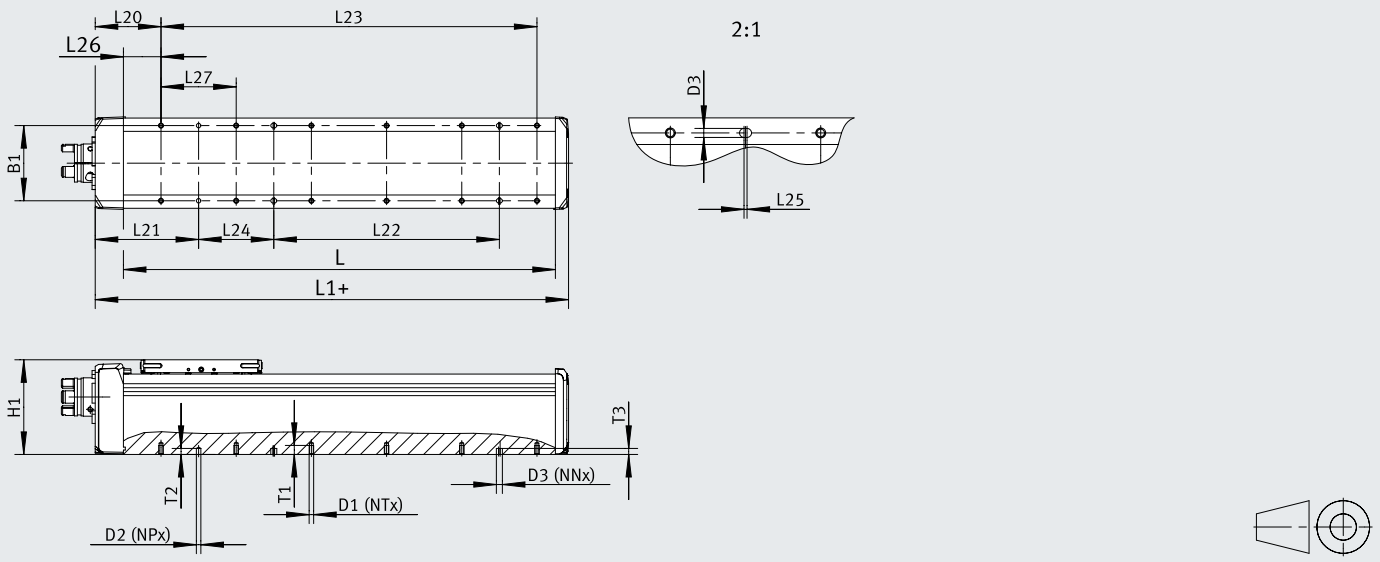

+ = plus stroke length + 2x stroke reserve
L23 = (NT/2-1) x 100

	B1	D1	D2 ⌀ H7	D3 H7	H1	L (with zero stroke length)	L20	L21
ELGD-BS-100-...-L-M	83	M5	6	6	69.4	202.5	71.5	121.5
ELGD-BS-120-...-L-M	100	M6			81.4	269	80.5	130.5

	L25	L26	L27	T1	T2	T3
ELGD-BS-100-...-L-M	2	50	100	10.5	8	8
ELGD-BS-120-...-L-M				12.5		

L	D1[1]		D2[2]	D3[3]		L24
	NT	L23	NP	NN	L22	
<270	4	100	2	–	–	–
≥270	6	200		2		100
≥370	8	300		4	100	
≥470	10	400			200	
≥570	12	500			300	
≥670	14	600			400	
≥770	16	700			500	
≥870	18	800			600	
≥970	20	900			700	
≥1070	22	1000			800	
≥1170	24	1100			900	
≥1270	26	1200			1000	
≥1370	28	1300			1100	
≥1470	30	1400			1200	
≥1570 ≤1650	32	1500			1300	

1) Threaded hole
2) Pin hole
3) Slotted hole

Datasheet

Dimensions – ELGD-BS-...-M7 (for front-end use) Download CAD data ➔ www.festo.com

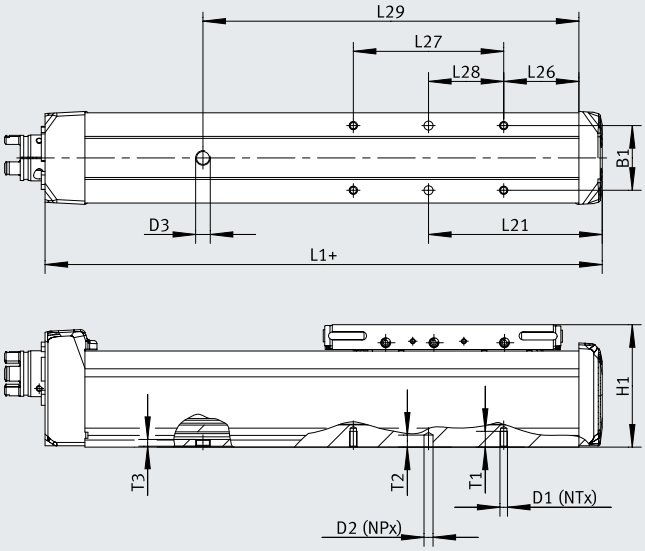

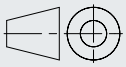

+ = plus stroke length + 2x stroke reserve
D3 = Sealing air connection

	B1	D1	D2 ⌀ H7	D3	H1	L21	L26
ELGD-BS-100-...-M7	83	M5	6	G1/8	69.4	115.6	50

	L27	L28	L29	T1	T2	T3
ELGD-BS-100-...-M7	100	50	250	10.5	8	3.5

Datasheet

Dimensions – Profile mounting EAHF-E24-60-P (standard mounting) Download CAD data ➔ www.festo.com

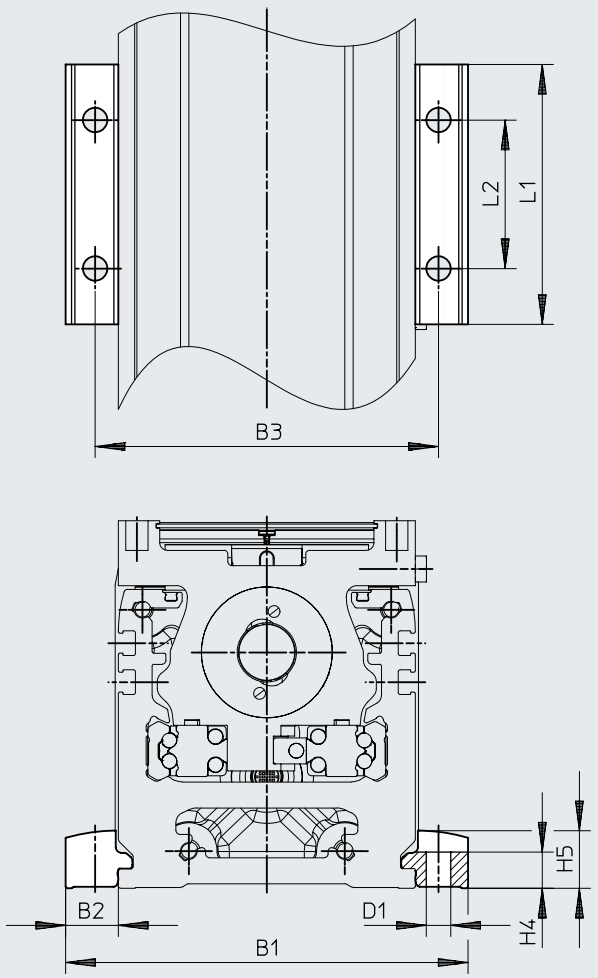

		B1	B2	B3	D1 ø H13	H4 ±0.1	H5	L1	L2
EAHF-E24-60-P	ELGD-BS-100	128.4	14.2	112.5	6.6	10.3	16.5	70	40
	ELGD-BS-120	148.4	14.2	132.5	6.6	10.3	16.5	70	40

Datasheet

Dimensions – Profile mounting EAHF-E24-60-P-S

Download CAD data ➔ www.festo.com

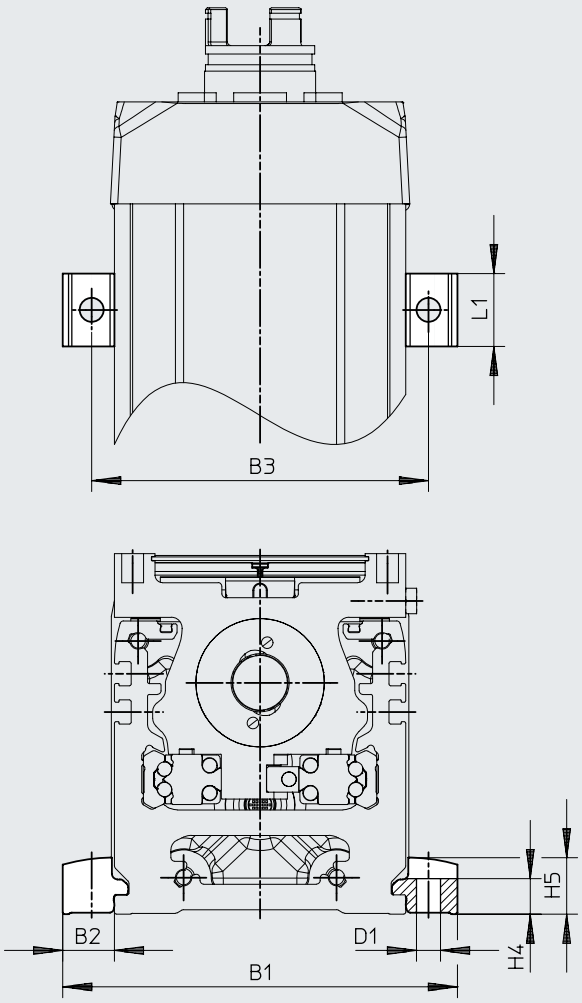

		B1	B2	B3	D1 ø H13	H4 ±0.1	H5	L1
EAHF-E24-60-P-S	ELGD-BS-100	128.4	14.2	112.5	6.6	10.3	16.5	20
	ELGD-BS-120	148.4	14.2	132.5	6.6	10.3	16.5	20

Datasheet

Dimensions – Profile mounting EAHF-E24-60-P-D Download CAD data ➔ www.festo.com

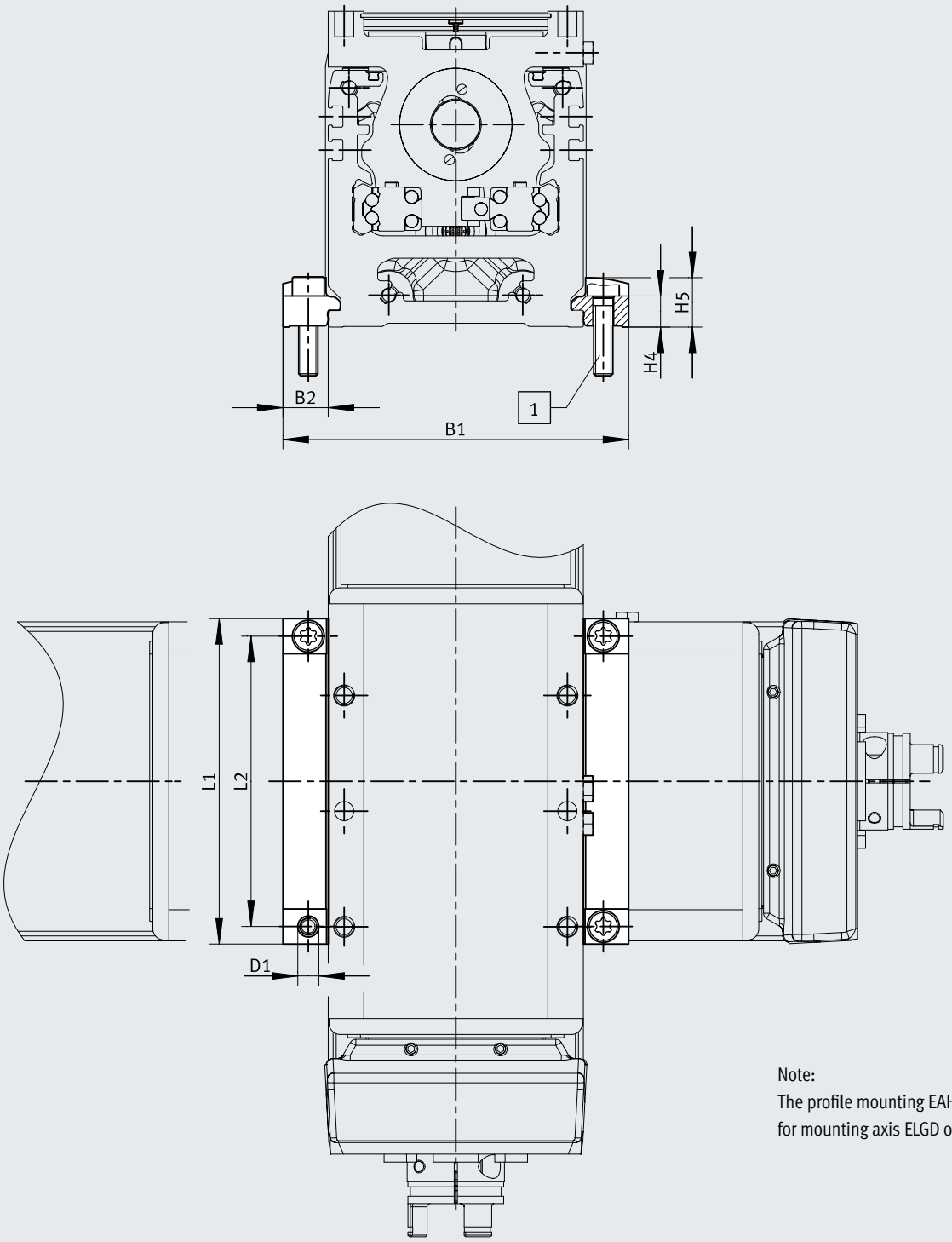

Note:
The profile mounting EAHF-E24-60-P-D... is designed for mounting axis ELGD on axis ELGD.

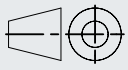

[1] Screws are included in the scope of delivery

		B1	B2	D1 Ø H13	H4 ±0.1	H5	L1	L2
EAHF-E24-60-P-D6	ELGD-BS-100	128.4	14.2	5.5	10.3	16.5	102	91
EAHF-E24-60-P-D7	ELGD-BS-120	148.4	14.2	6.6	10.3	16.5	102	91

Datasheet

Dimensions – Adjusting kit EADC-E16-... Download CAD data ➔ www.festo.com

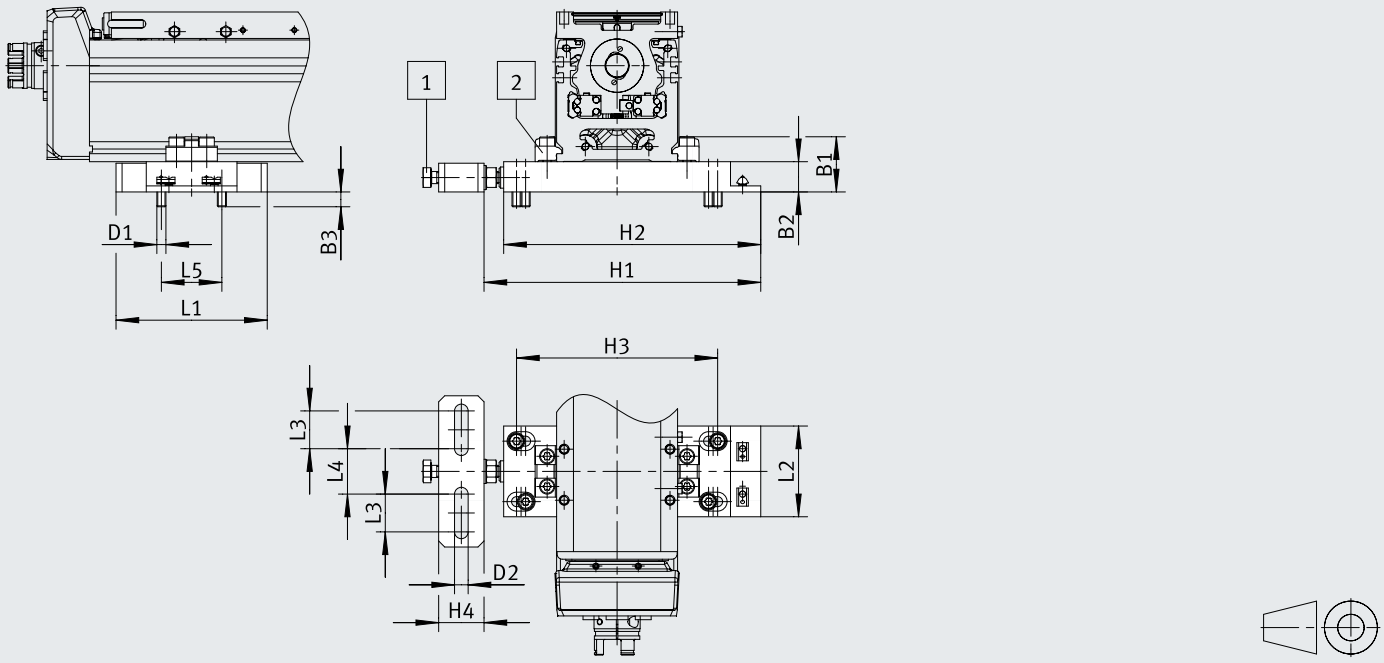

[1] M8 screw
[2] Profile mounting

		B1	B2	B3	D1	D2	H1	H2
EADC-E16-120-E24	ELGD-BS-120	36.5	20	9.8	M6	9	203	190

		H3		H4	L1	L2	L3	L4	L5
		min.	min.						
EADC-E16-120-E24	ELGD-BS-120	161	173	30	100	60	25	30	40

Datasheet

Dimensions – Mounting kit EAHM-E24-AP-120

Download CAD data ➔ www.festo.com

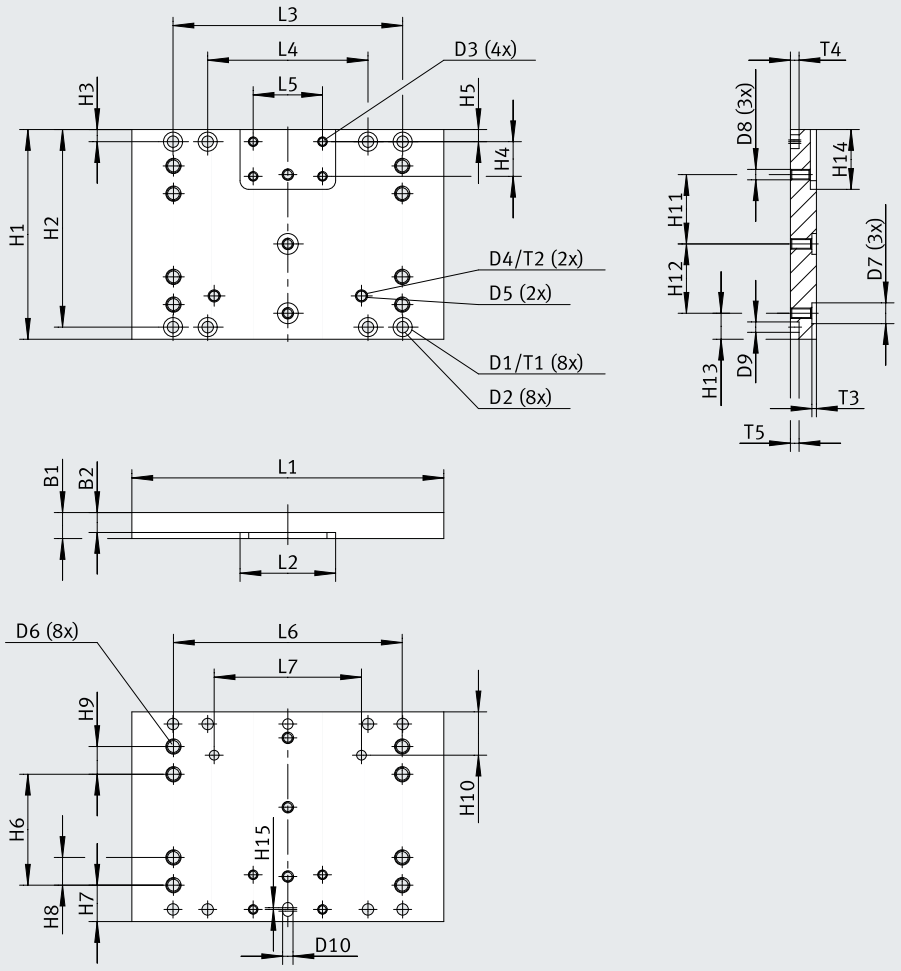

Note:
For the following combinations:
Base axis: ELGD-BS-120-L
Assembly:
Mini slide DGST-20/25

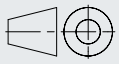

		B1	B2	D1 ⌀ H13	D2 ⌀ H13	D3	D4 ⌀ H7	D5 ⌀	D6	D7 ⌀ H8	D8	D9 ⌀ H8	D10	H1
EAHM-E24-AP-120	ELGD-BS-120-L	15	11.5	11	6.6	M5	6	5.6	M8	12	M6	6	6	121

		H2	H3	H4	H5	H6	H7	H8	H9	H10	H11	H12	H13	H14
EAHM-E24-AP-120	ELGD-BS-120-L	114	7	20	7	64	21	16	16	25	40	40	15	34.5

		L1	L2 +0.5	L3	L4	L5	L6	L7	T1	T2	T3	T4	T5
EAHM-E24-AP-120	ELGD-BS-120-L	180	55.2	132.5	92.5	40	132	85	6.5	5	2.6	5	5

Datasheet

Dimensions – Switch lug EAPM-E24-60-SLS Download CAD data ➔ www.festo.com

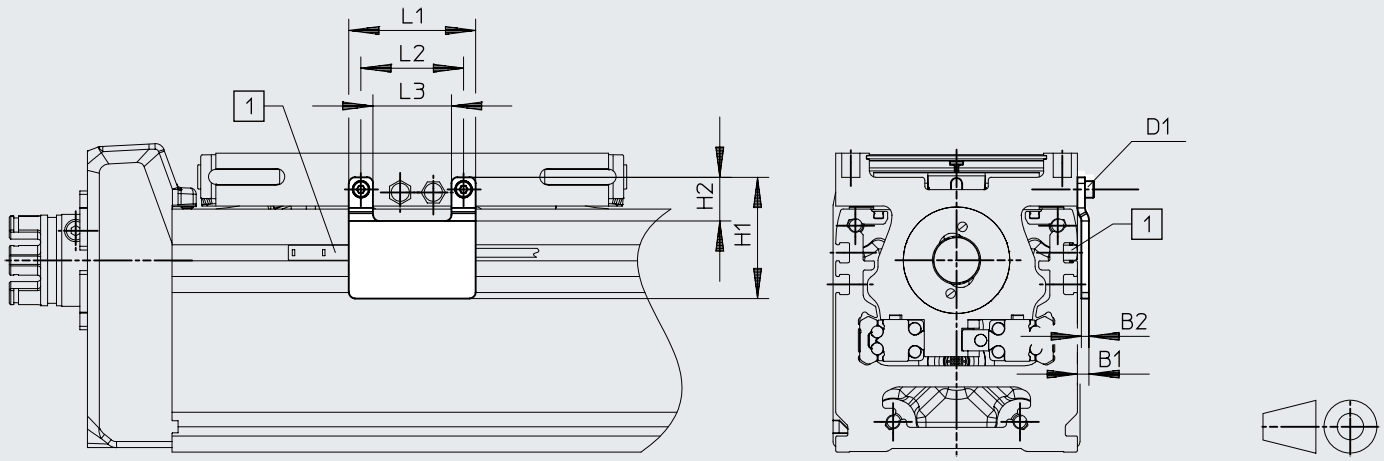

[1] Sensor slot for proximity switch SIES-8M

		B1	B2	D1	H1	H2	L1	L2	L3
EAPM-E24-60-SLS	ELGD-BS-100	3.5	2.5	M3	40.2	14.5	42	34	26
	ELGD-BS-120								

Dimensions – Switch lug EAPM-E24-...-SLE Download CAD data ➔ www.festo.com

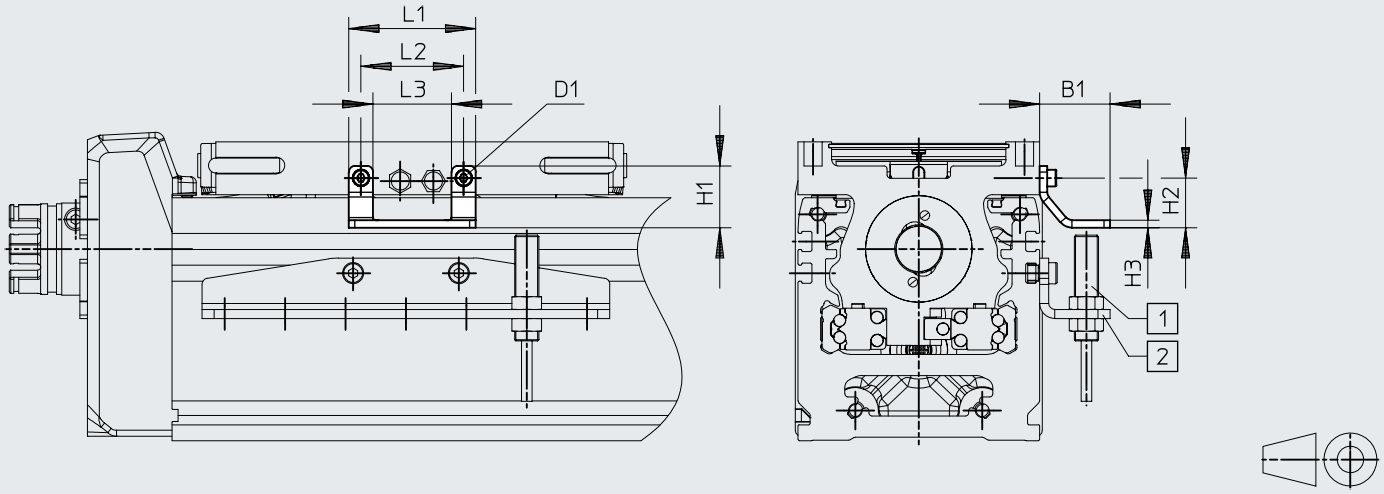

[1] Proximity switch SIEN-M8
[2] Sensor bracket EAPM-E24-60-SHE

		B1	D1	H1	H2	H3	L1	L2	L3
EAPM-E24-60-SLE	ELGD-BS-100	23.4	M3	20.5	16.5	2.5	42	34	26
	ELGD-BS-120								

Datasheet

Dimensions – Sensor bracket EAPM-E24-60-SHE Download CAD data ➔ www.festo.com

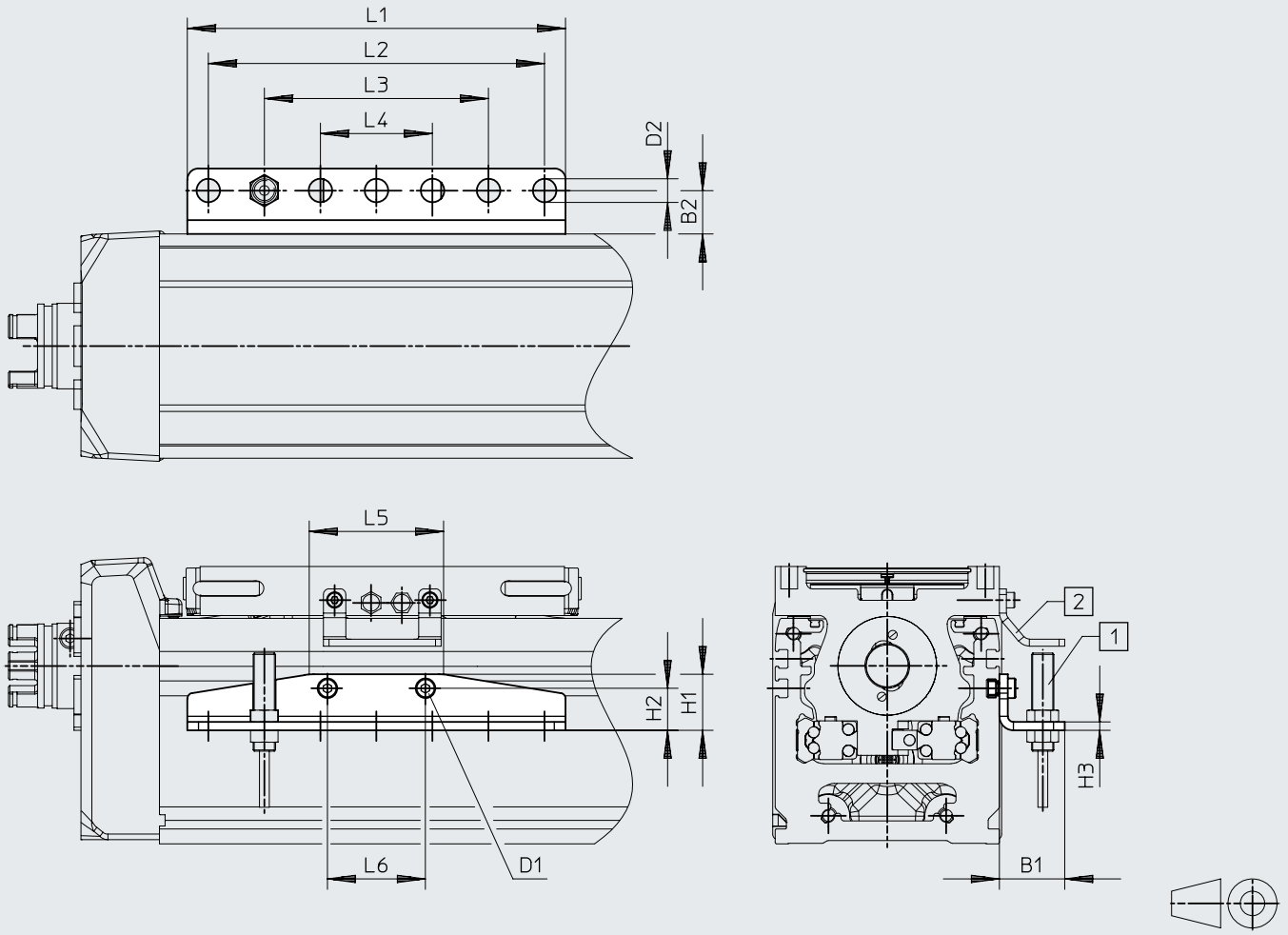

[1] Proximity switch SIEN-8M
[2] Switch lug EAPM-E24-60-SLE

		B1 ±0.3	B2	D1	D2 ø H13	H1 ±0.3	H2	H3
EAPM-E24-60-SHE	ELGD-BS-100 ELGD-BS-120	23.4	15.5	M4	8.4	20	15	3

		L1 ±0.2	L2	L3	L4	L5	L6
EAPM-E24-60-SHE	ELGD-BS-100 ELGD-BS-120	135	120	80	40	48	35

Datasheet

Dimensions – Sensor bracket EAPM-E24-60-SHO Download CAD data ➔ www.festo.com

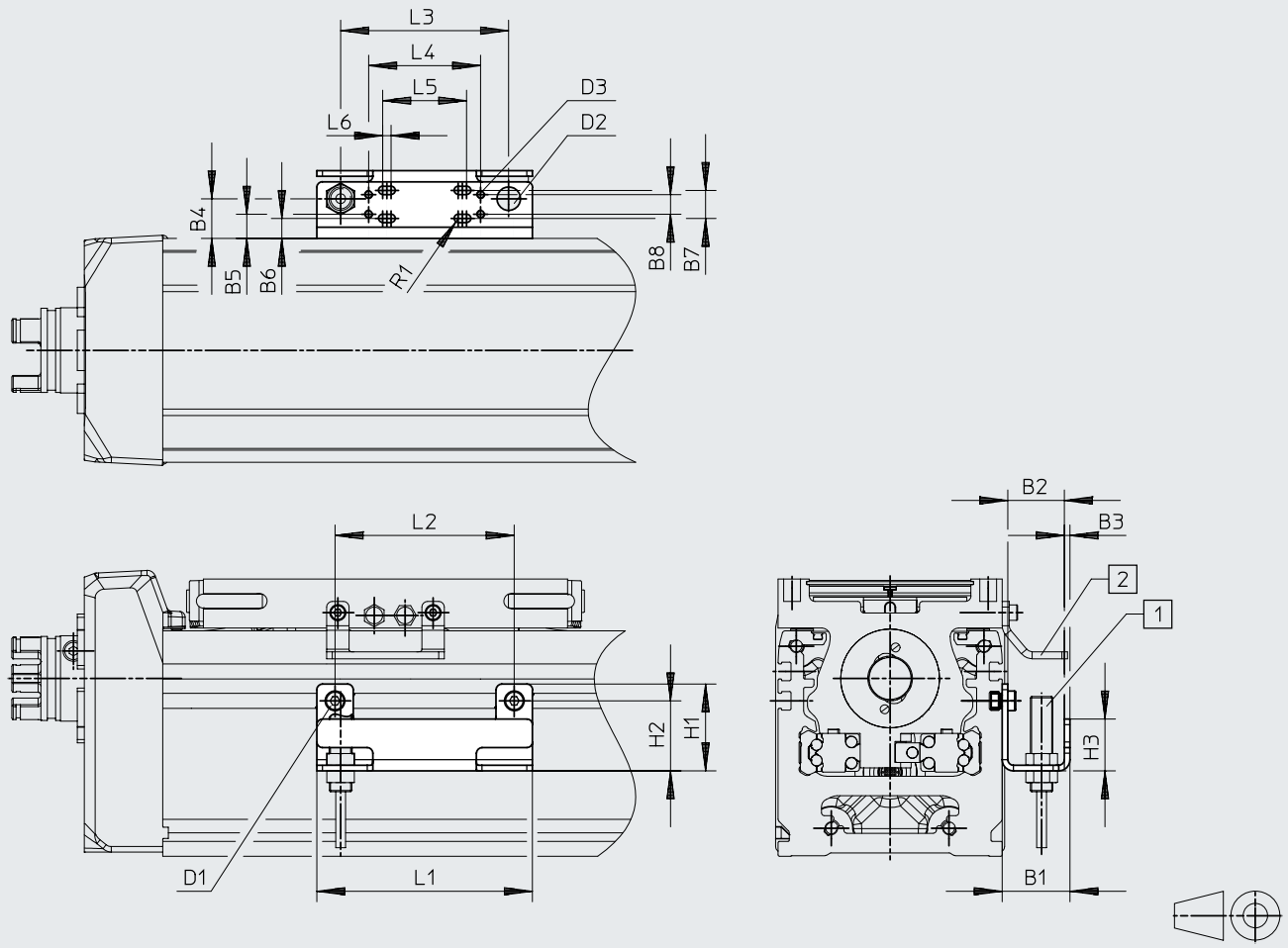

[1] Inductive sensor M8
[2] Switch lug EAPM-E24-60-SLE

		B1	B2	B3	B4	B5	B6	B7
EAPM-E24-60-SHO	ELGD-BS-100 ELGD-BS-120	24.2	20.2	2	14.1	8.6	7.1	10

		B8	D1	D2 ⌀	D3	H1	H2	H3
EAPM-E24-60-SHO	ELGD-BS-100 ELGD-BS-120	7	M3	8.4	M3	31	25	18.5

		L1	L2	L3	L4	L5	L6	R1
EAPM-E24-60-SHO	ELGD-BS-100 ELGD-BS-120	77	64	60	40	24	3	1.5

Datasheet

Dimensions – ELGD-...-M3 with incremental displacement encoder Download CAD data ➔ www.festo.com

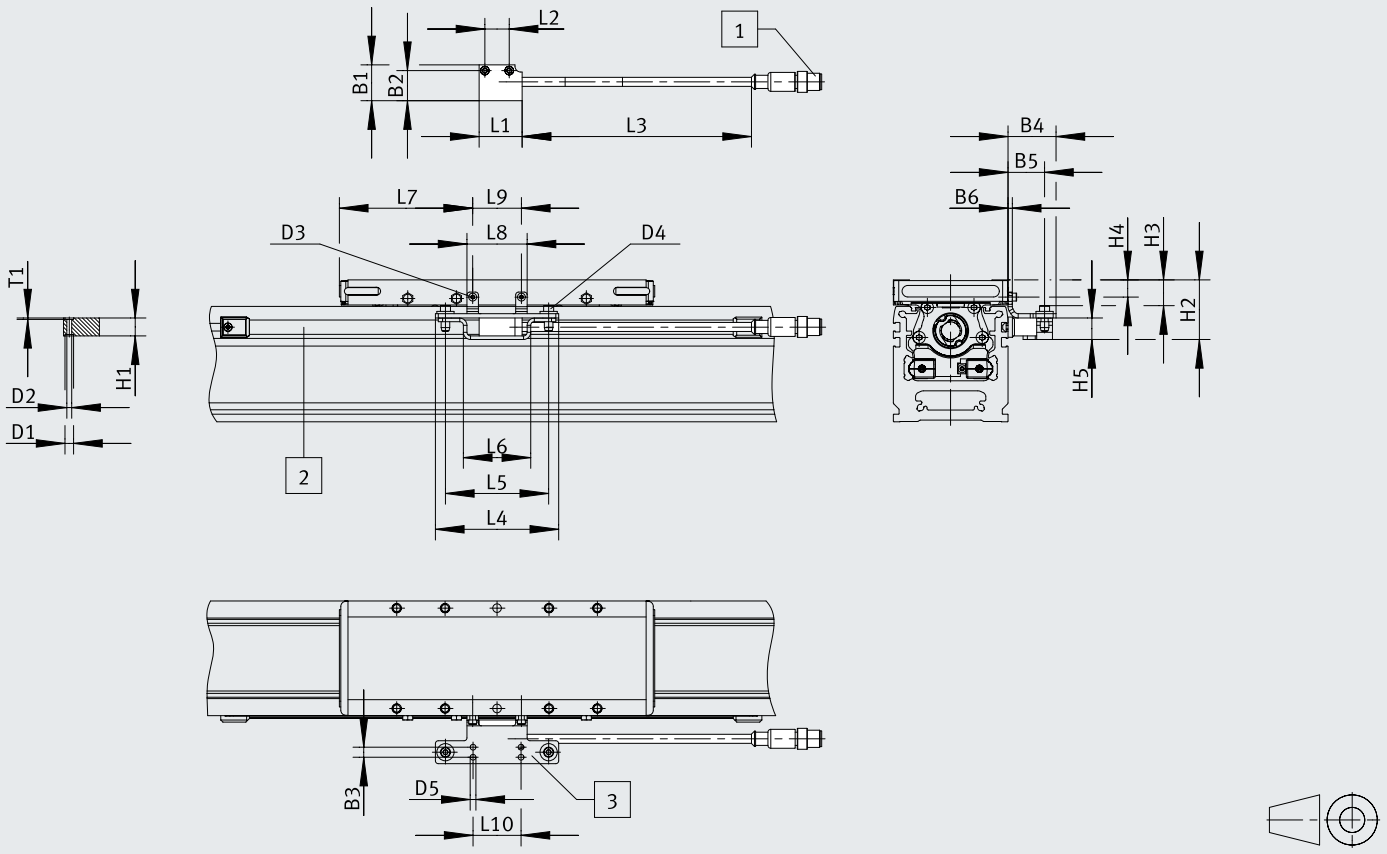

[1] Plug M12 (8-pin)
[2] Displacement encoder
[3] Switch lug

	B1	B2	B3	B4	B5	B6	D1 ø
ELGD-BS-100	25	21	7	33.5	25.5	3	6
ELGD-BS-120							

	D2 ø	D3	D4	D5 ø	H1 ±0.1	H2	H3
ELGD-BS-100	3.4	M2	M4	4	12.5	40.6	17
ELGD-BS-120						42.1	18.5

	H4	H5	L1	L2	L3	L4	L5
ELGD-BS-100	11	15	30	17	160	86	72
ELGD-BS-120	12.5						

	L6	L7	L8	L9	L10	T1
ELGD-BS-100	47	79	42	34	33.5	1
ELGD-BS-120		114.5				

Datasheet

Ordering data

	Size	Screw pitch [mm]	Stroke [mm]	Part no.	Type
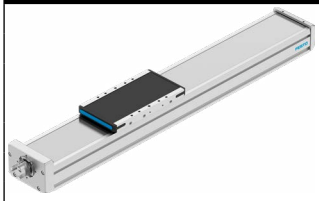	100	5	100	**8192312**	**ELGD-BS-KF-WD-100-100-0H-5P-L**
			200	**8192313**	**ELGD-BS-KF-WD-100-200-0H-5P-L**
			300	**8192314**	**ELGD-BS-KF-WD-100-300-0H-5P-L**
			400	**8192315**	**ELGD-BS-KF-WD-100-400-0H-5P-L**
			500	**8192316**	**ELGD-BS-KF-WD-100-500-0H-5P-L**
			600	**8192317**	**ELGD-BS-KF-WD-100-600-0H-5P-L**
			800	**8192318**	**ELGD-BS-KF-WD-100-800-0H-5P-L**
			1000	**8192319**	**ELGD-BS-KF-WD-100-1000-0H-5P-L**
		10	100	**8192320**	**ELGD-BS-KF-WD-100-100-0H-10P-L**
			200	**8192321**	**ELGD-BS-KF-WD-100-200-0H-10P-L**
			300	**8192322**	**ELGD-BS-KF-WD-100-300-0H-10P-L**
			400	**8192323**	**ELGD-BS-KF-WD-100-400-0H-10P-L**
			500	**8192324**	**ELGD-BS-KF-WD-100-500-0H-10P-L**
			600	**8192325**	**ELGD-BS-KF-WD-100-600-0H-10P-L**
			800	**8192326**	**ELGD-BS-KF-WD-100-800-0H-10P-L**
			1000	**8192327**	**ELGD-BS-KF-WD-100-1000-0H-10P-L**
		20	100	**8248005**	**ELGD-BS-KF-WD-100-100-0H-20P-L**
			200	**8248006**	**ELGD-BS-KF-WD-100-200-0H-20P-L**
			300	**8248007**	**ELGD-BS-KF-WD-100-300-0H-20P-L**
			400	**8248008**	**ELGD-BS-KF-WD-100-400-0H-20P-L**
			500	**8248009**	**ELGD-BS-KF-WD-100-500-0H-20P-L**
			600	**8248010**	**ELGD-BS-KF-WD-100-600-0H-20P-L**
			800	**8248011**	**ELGD-BS-KF-WD-100-800-0H-20P-L**
			1000	**8248012**	**ELGD-BS-KF-WD-100-1000-0H-20P-L**
	120	5	100	**8192328**	**ELGD-BS-KF-WD-120-100-0H-5P-L**
			200	**8192329**	**ELGD-BS-KF-WD-120-200-0H-5P-L**
			300	**8192330**	**ELGD-BS-KF-WD-120-300-0H-5P-L**
			400	**8192331**	**ELGD-BS-KF-WD-120-400-0H-5P-L**
			500	**8192332**	**ELGD-BS-KF-WD-120-500-0H-5P-L**
			600	**8192333**	**ELGD-BS-KF-WD-120-600-0H-5P-L**
			800	**8192334**	**ELGD-BS-KF-WD-120-800-0H-5P-L**
			1000	**8192335**	**ELGD-BS-KF-WD-120-1000-0H-5P-L**
		10	100	**8192336**	**ELGD-BS-KF-WD-120-100-0H-10P-L**
			200	**8192337**	**ELGD-BS-KF-WD-120-200-0H-10P-L**
			300	**8192338**	**ELGD-BS-KF-WD-120-300-0H-10P-L**
			400	**8192339**	**ELGD-BS-KF-WD-120-400-0H-10P-L**
			500	**8192340**	**ELGD-BS-KF-WD-120-500-0H-10P-L**
			600	**8192341**	**ELGD-BS-KF-WD-120-600-0H-10P-L**
			800	**8192342**	**ELGD-BS-KF-WD-120-800-0H-10P-L**
			1000	**8192343**	**ELGD-BS-KF-WD-120-1000-0H-10P-L**

Ordering data – Modular product system

More information → elgd-bs

	Size	Stroke [mm]	Part no.	Type
	100	50 ... 1000	**8176878**	**ELGD-BS-KF-WD-100-...**
	120	50 ... 1500	**8176879**	**ELGD-BS-KF-WD-120-...**

Peripherals overview

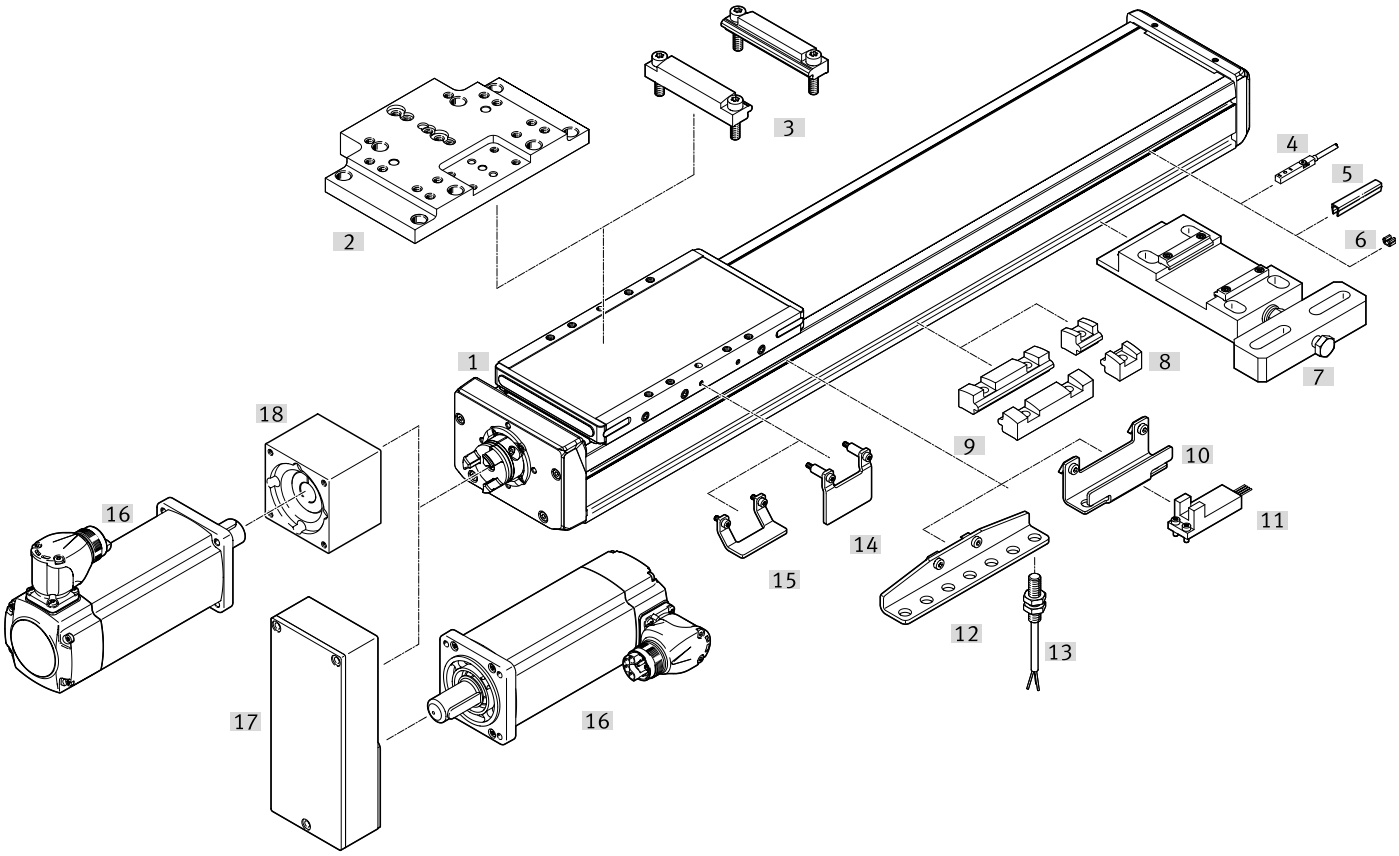

Peripherals overview

Accessories

	Type	Description	➔ Page/Internet
[1]	Ball screw axis ELGD-BS-WD	Electric drive	elgd-bs
[2]	Mounting kit EAHM-E...-AP	For mounting mini slide DGST or EGSC on the slide	32
[3]	Profile mounting EAHF-E24-...-D...	For axis/axis mounting with adapter plate	32
[4]	Proximity switch, T-slot SIES-8M	Inductive proximity switch, for T-slot	33
[5]	Slot cover ABP-S	For protection against contamination	34
[6]	Clip SMBK	For mounting the proximity switch cable in the slot	34
[7]	Adjusting kit EADC-E16	For mounting the axis on a vertical surface. Once mounted, the axis can be aligned horizontally	32
[8]	Profile mounting EAHF-E24-...-S	For mounting the axis on the side of the profile	32
[9]	Profile mounting EAHF-E24-...	For mounting the axis on the side of the profile	32
[10]	Sensor bracket EAPM-E24-SHO	For mounting third-party sensors on the axis	33
[11	Sensor OMRON	Third-party sensor OMRON, EE-SX674 series	–
[12]	Sensor bracket EAPM-E24-SHE	For mounting the inductive proximity switches SIEN-M8 (round design) on the axis	33
[13]	Proximity switch, M8 SIEN-M8	Inductive proximity switch, round design	34
[14]	Switch lug EAPM-E24-SLS	For sensing the slide position using inductive proximity switch SIES-8M or for optical sensors (Omron) with sensor bracket EAPM-E24-SHO	33
[15]	Switch lug EAPM-E24-SLE	For sensing the slide position using inductive proximity switch SIEN-M8 (round design) and sensor bracket EAPM-E24-SHE	33
[16]	Motor EMMT	Motors and kits specially matched with the axis Detailed information: www.festo.com/catalogue/eamm Engineering tool: www.festo.com/x/electric-motion-sizing	emmt
[17]	Parallel kit EAMM	For parallel motor mounting	eamm-u
[18]	Axial kit EAMM	For axial motor mounting	eamm-a

Accessories

Permitted axis/motor combinations for axial and parallel kits

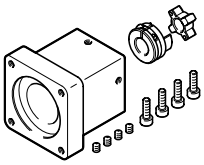

Under the following links you will find all the information about:
- Axis/motor combinations
- Permitted third-party motors
- Technical data
- Dimensions

For axial kits ➔ Internet: eamm-a
For parallel kits ➔ Internet: eamm-u

Profile mounting EAHF-E24-...-P-S

	Description	Suitable for the production of Li-ion batteries	Material	Product weight	Part no.	Type
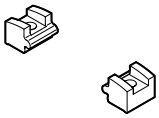	For size 60, 80, 120, WD-100, WD-120	F1a	Anodised wrought aluminium alloy	18 g	**8197128**	**EAHF-E24-60-P-S**

Profile mounting EAHF-E24-...-P

	Description	Suitable for the production of Li-ion batteries	Material	Product weight	Part no.	Type
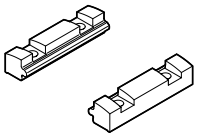	For size 60, 80, 120, WD-100, WD-120	F1a	Anodised wrought aluminium alloy	71 g	**8197132**	**EAHF-E24-60-P**

Profile mounting EAHF-E24-...-P-D...

	Description[1]	Suitable for the production of Li-ion batteries	Material	Product weight	Part no.	Type
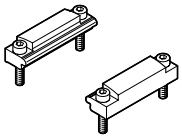	ELGD-60 on ELGD-WD-100-L [1]	F1a	Anodised wrought aluminium alloy	133 g	**8197130**	**EAHF-E24-60-P-D6**
	ELGD-80 on ELGD-WD-100-L			133 g	**8197130**	**EAHF-E24-60-P-D6**
	ELGD-80 on ELGD-120-L			165 g	**8229954**	**EAHF-E24-60-P-D7**
	ELGD-WD-100-L on ELGD-120-L			165 g	**8229954**	**EAHF-E24-60-P-D7**

1) With this combination, the axis is mounted off-centre on the slide (see dimension L13 on the dimensional drawing with long slide).

Adjusting kit EADC-E16

	Description	Adapter plate material	Product weight	Part no.	Type
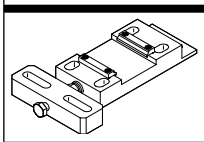	For size 120	Anodised wrought aluminium alloy	845 g	**8234414**	**EADC-E16-120-E24**

Mounting kit EAHM-E...-AP

	Description	For assembly	Adapter plate material	Product weight	Part no.	Type
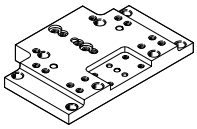	For size 120	DGST-20/25	Anodised aluminium	887 g	**8238435**	**EAHM-E26-AP-120**

Accessories

Switch lug EAPM-E24-...-SLS

	Description	Suitable for the production of Li-ion batteries	Material	Product weight	Part no.	Type
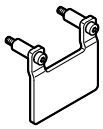	For size 100, 120	F1a	Steel	32 g	**8197117**	**EAPM-E24-60-SLS**

Switch lug EAPM-E24-...-SLE

	Description	Suitable for the production of Li-ion batteries	Material	Product weight	Part no.	Type
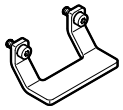	For size 100, 120	F1a	Steel	20 g	**8197116**	**EAPM-E24-60-SLE**

Sensor bracket EAPM-E24-...-SHE

	Description	Suitable for the production of Li-ion batteries	Material	Product weight	Part no.	Type
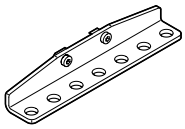	For size 100, 120	F1a	Steel	103 g	**8197123**	**EAPM-E24-60-SHE**

Sensor bracket EAPM-E24-...-SHO

	Description	Suitable for the production of Li-ion batteries	Material	Product weight	Part no.	Type
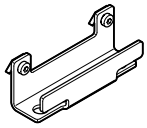	For size 100, 120	F1a	Steel	67 g	**8197121**	**EAPM-E24-60-SHO**

Proximity switch for T-slot, inductive

Datasheets → Internet: sies

	Type of mounting	Switching output	Electrical connection	Cable length [m]	Part no.	Type
N/O						
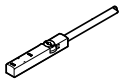	Inserted in the slot from above, flush with the cylinder profile	PNP	Cable, 3-core	7.5	**551386**	**SIES-8M-PS-24V-K-7.5-OE**
			Plug M8x1, 3-pin	0.3	**551387**	**SIES-8M-PS-24V-K-0.3-M8D**
		NPN	Cable, 3-core	7.5	**551396**	**SIES-8M-NS-24V-K-7.5-OE**
			Plug M8x1, 3-pin	0.3	**551397**	**SIES-8M-NS-24V-K-0.3-M8D**
N/C						
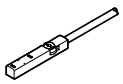	Inserted in the slot from above, flush with the cylinder profile	PNP	Cable, 3-core	7.5	**551391**	**SIES-8M-PO-24V-K-7.5-OE**
			Plug M8x1, 3-pin	0.3	**551392**	**SIES-8M-PO-24V-K-0.3-M8D**
		NPN	Cable, 3-core	7.5	**551401**	**SIES-8M-NO-24V-K-7.5-OE**
			Plug M8x1, 3-pin	0.3	**551402**	**SIES-8M-NO-24V-K-0.3-M8D**

Accessories

Proximity switch M8 (round design), inductive

Datasheets → Internet: sien

	Switching output	Electrical connection	Cable length [m]	Part no.	Type
N/O					
	PNP	Cable, 3-core	2.5	**150386**	**SIEN-M8B-PS-K-L**
	NPN		2.5	**150384**	**SIEN-M8B-NS-K-L**
	PNP	Plug M8x1, 3-pin	–	**150387**	**SIEN-M8B-PS-S-L**
	NPN		–	**150385**	**SIEN-M8B-NS-S-L**
N/C					
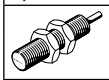	PNP	Cable, 3-core	2.5	**150390**	**SIEN-M8B-PO-K-L**
	NPN		2.5	**150388**	**SIEN-M8B-NO-K-L**
	PNP	Plug M8x1, 3-pin	–	**150391**	**SIEN-M8B-PO-S-L**
	NPN		–	**150389**	**SIEN-M8B-NO-S-L**

Slot cover ABP-5-S1

	Description	Material	Pack size	Product weight	Part no.	Type
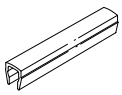	For size 100, 120	ABS	2 every 0.5 m	13 g	**563360**	**ABP-5-S1**

Clip SMBK

	Description	Pack size	Product weight	Part no.	Type
	For size 100, 120	10	1 g	**534254**	**SMBK-8**

Ordering data – Encoder cables for displacement encoder, ELGD-...-M3

Datasheets → Internet: nebm

	Electrical connection, left	Electrical connection, right	Cable length [m]	Part no.	Type
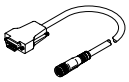	Displacement encoder ELGD-...-M3	Motor controller CMMP-AS and CMMT-AS	5	**1599105**	**NEBM-M12G8-E-5-S1G9-V3**
			10	**1599106**	**NEBM-M12G8-E-10-S1G9-V3**
			15	**1599107**	**NEBM-M12G8-E-15-S1G9-V3**
			X[1]	**1599108**	**NEBM-M12G8-E-...-S1G9-V3**

1) Max. cable length: 25 m.

Ordering data – Adapter

	Description	Part no.	Type
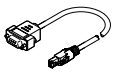	Required in combination with the servo drive CMMT-AS as adapter between encoder cable NEBM-M12G8-...-V3 and interface X3 (position encoder 2)	**8106112**	**NEFM-S1G9-K-0.5-R3G8**