Ledinaire SlimDownlight DN065B

DN065B LED10S/840 PSU II WH

LED Module, system flux 1000 lm - 840 neutral white - Power supply unit - Safety class II - White

The LEDINAIRE range contains a selection of popular off-the-shelf LED luminaires that come with the high Philips quality levels at a competitive price. Reliable, energy-efficient and affordable – just what you need

Product data

General Information	
Number of light sources	1 pc
Lamp family code	LED10S [LED Module, system flux 1000 lm]
Beam angle of light source	90 x 90 °
Light source color	840 neutral white
Light source replaceable	No
Number of gear units	1 unit
Driver/power unit/transformer	Power supply unit
Driver included	Yes
Optic type	Wide beam
Luminaire light beam spread	90° x 90°
Connection	Screw connector
Cable	-
Protection class IEC	Safety class II
Glow-wire test	Temperature 650 °C, duration 5 s

Flammability mark	-
CE mark	CE mark
ENEC mark	-
Warranty period	3 years
Remarks	*-Per Lighting Europe guidance paper "Evaluating performance of LED based luminaires - January 2018": statistically there is no relevant difference in lumen maintenance between B50 and for example B10. Therefore the median useful life (B50) value also represents the B10 value.
Constant light output	No
Number of products on MCB of 16 A type B	48
RoHS mark	RoHS mark

Ledinaire SlimDownlight DN065B

Unified glare rating CEN	Not applicable

Operating and Electrical

Input Voltage	220 to 240 V
Input Frequency	50 to 60 Hz
Inrush current	4.03 A
Inrush time	272 ms
Power Factor (Min)	0.8

Controls and Dimming

Dimmable	No

Mechanical and Housing

Housing Material	Aluminum
Reflector material	-
Optic material	Polycarbonate
Optical cover/lens material	Polycarbonate
Fixation material	Stainless steel
Optical cover/lens finish	Frosted
Overall height	30 mm
Overall diameter	175 mm

Approval and Application

Ingress protection code	IP20 [Finger-protected]
Mech. impact protection code	IK02 [0.2 J standard]

Initial Performance (IEC Compliant)

Initial luminous flux (system flux)	1000 lm
Luminous flux tolerance	+/-10%
Initial LED luminaire efficacy	91 lm/W
Init. Corr. Color Temperature	4000 K
Init. Color Rendering Index	>80
Initial chromaticity	(0.38, 0.38) SDCM <5
Initial input power	11 W
Power consumption tolerance	+/-10%

Over Time Performance (IEC Compliant)

Control gear failure rate at median useful life 50000 h	7.5 %
Lumen maintenance at median useful life* 50000 h	L65

Application Conditions

Ambient temperature range	0 to +35 °C
Performance ambient temperature Tq	25 °C
Suitable for random switching	No

Product Data

Full product code	871869938176999
Order product name	DN065B LED10S/840 PSU II WH
EAN/UPC - Product	8718699381769
Order code	910503910332
Numerator - Quantity Per Pack	1
Numerator - Packs per outer box	12
Material Nr. (12NC)	910503910332
Net Weight (Piece)	0.270 kg

Dimensional drawing

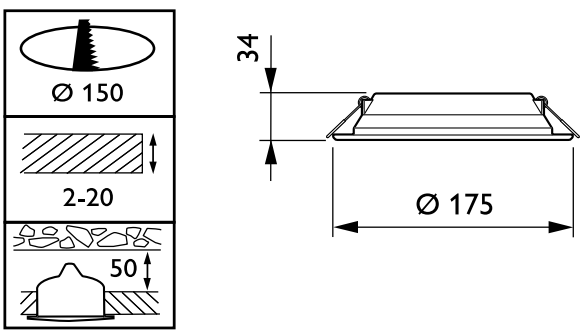

Ledinaire SlimDownlight DN065B

Ledinaire SlimDownlight DN065B

© 2019 Signify Holding All rights reserved. Signify does not give any representation or warranty as to the accuracy or completeness of the information included herein and shall not be liable for any action in reliance thereon. The information presented in this document is not intended as any commercial offer and does not form part of any quotation or contract, unless otherwise agreed by Signify. Philips and the Philips Shield Emblem are registered trademarks of Koninklijke Philips N.V.

www.lighting.philips.com
2019, February 28 - data subject to change