Hexagon Application Kit

For XMC4000 Family

CPU_44A-V2

CPU Board XMC4400 General Purpose

Board User's Manual

Revision 1.0, 2013-02-19

Microcontroller

Edition 2013-02-19

Published by
Infineon Technologies AG
81726 Munich, Germany

© 2013 Infineon Technologies AG
All Rights Reserved.

Legal Disclaimer

The information given in this document shall in no event be regarded as a guarantee of conditions or characteristics. With respect to any examples or hints given herein, any typical values stated herein and/or any information regarding the application of the device, Infineon Technologies hereby disclaims any and all warranties and liabilities of any kind, including without limitation, warranties of non-infringement of intellectual property rights of any third party.

Information

For further information on technology, delivery terms and conditions and prices, please contact the nearest Infineon Technologies Office (**www.infineon.com**).

Warnings

Due to technical requirements, components may contain dangerous substances. For information on the types in question, please contact the nearest Infineon Technologies Office.

Infineon Technologies components may be used in life-support devices or systems only with the express written approval of Infineon Technologies, if a failure of such components can reasonably be expected to cause the failure of that life-support device or system or to affect the safety or effectiveness of that device or system. Life support devices or systems are intended to be implanted in the human body or to support and/or maintain and sustain and/or protect human life. If they fail, it is reasonable to assume that the health of the user or other persons may be endangered.

Revision History	
Page or Item	**Subjects (major changes since previous revision)**
Revision 1.0, 2013-02-19	Initial release

Trademarks of Infineon Technologies AG

AURIX™, C166™, CanPAK™, CIPOS™, CIPURSE™, EconoPACK™, CoolMOS™, CoolSET™, CORECONTROL™, CROSSAVE™, DAVE™, EasyPIM™, EconoBRIDGE™, EconoDUAL™, EconoPIM™, EiceDRIVER™, eupec™, FCOS™, HITFET™, HybridPACK™, I²RF™, ISOFACE™, IsoPACK™, MIPAQ™, ModSTACK™, my-d™, NovalithIC™, OptiMOS™, ORIGA™, PRIMARION™, PrimePACK™, PrimeSTACK™, PRO-SIL™, PROFET™, RASIC™, ReverSave™, SatRIC™, SIEGET™, SINDRION™, SIPMOS™, SmartLEWIS™, SOLID FLASH™, TEMPFET™, thinQ!™, TRENCHSTOP™, TriCore™.

Other Trademarks

Advance Design System™ (ADS) of Agilent Technologies, AMBA™, ARM™, MULTI-ICE™, KEIL™, PRIMECELL™, REALVIEW™, THUMB™, µVision™ of ARM Limited, UK. AUTOSAR™ is licensed by AUTOSAR development partnership. Bluetooth™ of Bluetooth SIG Inc. CAT-iq™ of DECT Forum. COLOSSUS™, FirstGPS™ of Trimble Navigation Ltd. EMV™ of EMVCo, LLC (Visa Holdings Inc.). EPCOS™ of Epcos AG. FLEXGO™ of Microsoft Corporation. FlexRay™ is licensed by FlexRay Consortium. HYPERTERMINAL™ of Hilgraeve Incorporated. IEC™ of Commission Electrotechnique Internationale. IrDA™ of Infrared Data Association Corporation. ISO™ of INTERNATIONAL ORGANIZATION FOR STANDARDIZATION. MATLAB™ of MathWorks, Inc. MAXIM™ of Maxim Integrated Products, Inc. MICROTEC™, NUCLEUS™ of Mentor Graphics Corporation. Mifare™ of NXP. MIPI™ of MIPI Alliance, Inc. MIPS™ of MIPS Technologies, Inc., USA. muRata™ of MURATA MANUFACTURING CO., MICROWAVE OFFICE™ (MWO) of Applied Wave Research Inc., OmniVision™ of OmniVision Technologies, Inc. Openwave™ Openwave Systems Inc. RED HAT™ Red Hat, Inc. RFMD™ RF Micro Devices, Inc. SIRIUS™ of Sirius Satellite Radio Inc. SOLARIS™ of Sun Microsystems, Inc. SPANSION™ of Spansion LLC Ltd. Symbian™ of Symbian Software Limited. TAIYO YUDEN™ of Taiyo Yuden Co. TEAKLITE™ of CEVA, Inc. TEKTRONIX™ of Tektronix Inc. TOKO™ of TOKO KABUSHIKI KAISHA TA. UNIX™ of X/Open Company Limited. VERILOG™, PALLADIUM™ of Cadence Design Systems, Inc. VLYNQ™ of Texas Instruments Incorporated. VXWORKS™, WIND RIVER™ of WIND RIVER SYSTEMS, INC. ZETEX™ of Diodes Zetex Limited.

Last Trademarks Update 2011-02-24

Table of Contents

Introduction **7**

1 Overview **7**
1.1 Key Features 7
1.2 Block Diagram 8

2 Hardware Description **9**
2.1 Power Supply 9
2.2 Reset 12
2.3 Clock Generation 13
2.4 Boot Option 13
2.5 Debug Interface 14
2.5.1 On-board USB Debugger 15
2.5.2 Cortex Debug Connector (10-pin) 16
2.5.3 Cortex Debug+ETM Connector (20-pin) 17
2.6 RGB LED 19
2.7 USB 19
2.8 RTC 21
2.9 User LEDs and User Buttons 22
2.10 Potentiometer 22
2.11 Satellite Connectors 23
2.11.1 COM Connector 24
2.11.2 HMI Connector 25
2.11.3 ACT Satellite Connector 26

3 Production Data **26**
3.1 Schematics 26
3.2 Component Placement and Geometry 31
3.3 Bill of Material (BOM) 32

List of Figures

Figure 1 CPU_44A-V2 Board Block Diagram....8
Figure 2 CPU Board XMC4400 General Purpose (CPU_44A-V2)....9
Figure 3 Powering Option....10
Figure 4 Block Diagram Of Power Supply....10
Figure 5 Reset Circuit....12
Figure 6 Reset LED and Reset Button....12
Figure 7 Clock Generation....13
Figure 8 Boot Options Switch....13
Figure 9 Installation of Serial Port Driver....15
Figure 10 On-Board USB Debugger....15
Figure 11 Cortex Debug Connector (10-pin)....16
Figure 12 Cortex Debug Connector (10-pin) Layout....16
Figure 13 Cortex Debug+ETM Connector (20-pin)....17
Figure 14 Cortex Debug+ETM Connector (20-pin) Layout....18
Figure 15 RGB LED....19
Figure 16 USB Connector....19
Figure 17 USB power generation - Host/OTG mode....20
Figure 18 Battery Holder for Coin Cells....21
Figure 19 XMC4400 Power Domains and Real Time Clock....21
Figure 20 User LEDs and User Buttons....22
Figure 21 Satellite Connectors....23
Figure 22 Satellite Connector Type COM....24
Figure 23 Satellite Connector Type HMI....25
Figure 24 Satellite Connector Type ACT....26
Figure 25 Satellite Connectors, USB-OTG....27
Figure 26 XMC4400....28
Figure 27 Power, Debug Connectors, Reset....29
Figure 28 On-board Debugger....30
Figure 29 Component Placement and Geometry....31

List of Tables

Table 1 Power status LED’s 10
Table 2 Power Measurement 11
Table 3 Boot Options Settings 13
Table 4 Cortex Debug Connector (10 Pin) 16
Table 5 Cortex Debug+ETM Connector (20 Pin) 17
Table 6 RGB LED Connections 19
Table 7 USB micro AB connector Pinot 20
Table 8 User LEDs 22
Table 9 User Buttons 22
Table 10 Potentiometer 22
Table 11 BOM of CPU_44A-V2 Board 32

Introduction

This document describes the features and hardware details of the CPU Board XMC4400 General Purpose (CPU_44A-V2) designed to work with Infineon's XMC4400 Microcontroller. This board is part of Infineon's Hexagon Application Kits.

1 Overview

The CPU board CPU_44A-V2 houses the XMC4400 Microcontroller and three satellite connectors (HMI, COM, ACT) for application expansion. The board along with satellite cards (e.g. HMI_OLED-V1, COM_ETH-V1, AUT_ISO-V1 boards) demonstrates the capabilities of the XMC4400. The main use case for this board is to demonstrate the generic features of the XMC4400 device including tool chain. The focus is safe operation under evaluation conditions. The board is neither cost nor size optimized and does not serve as a reference design.

1.1 Key Features

The CPU_44A-V2 board is equipped with the following features

- XMC4400 (ARM® Cortex™-M4-based) Microcontroller, 512 kByte on-chip Flash, LQFP-100
- Connection to satellite cards via the satellite connectors COM, HMI and ACT
- USB OTG Host/Device support via micro USB connector
- Debug options
  - On-board Debugger via the Debug USB connector
  - Cortex Debug connector 10-pin (0.05")
  - Cortex Debug+ETM connector 20-pin (0.05")
- Reset push button
- RGB LED connected to GPIOs P1.10, P1.11 and P5.7
- Boot option switch
- PowerScale Connector: Ready for power consumption analysis
- 7 LED's
  - 3 Power indicating LEDs
  - 2 User LEDs (P5.2 and P1.8)
  - 1 RESET LED
  - 1 Debug LED
- Two User Buttons connected to HIB_IO_0 and P0.10
- Potentiometer, connected to analog input P14.1
- Power supply
  - Via Micro-USB connector in USB device mode
  - Via satellite connector pins (COM/ACT satellites cards can supply power to CPU board)
  - Via Debug USB connector
  - RTC backup battery

1.2 Block Diagram

Figure 1 shows the functional block diagram of the CPU_44A-V2 board. For more information about the power supply please refer to chapter 2.1.

The CPU board has got the following building blocks:

- 3 Satellite Connectors (COM, HMI ACT)
- 2 User LEDs connected to GPIOs P5.2 and P1.8
- 2 User Buttons connected to HIB_IO_0 and P0.10
- RGB LED connected to GPIOs P1.10, P1.11 and P5.7
- 2 Cortex Debug Connectors
- Variable resistor (POTI) connected to GPIO P14.1
- USB On-The-Go Connector (Micro-USB)
- On-board Debugger via Debug USB connector (Micro-USB)

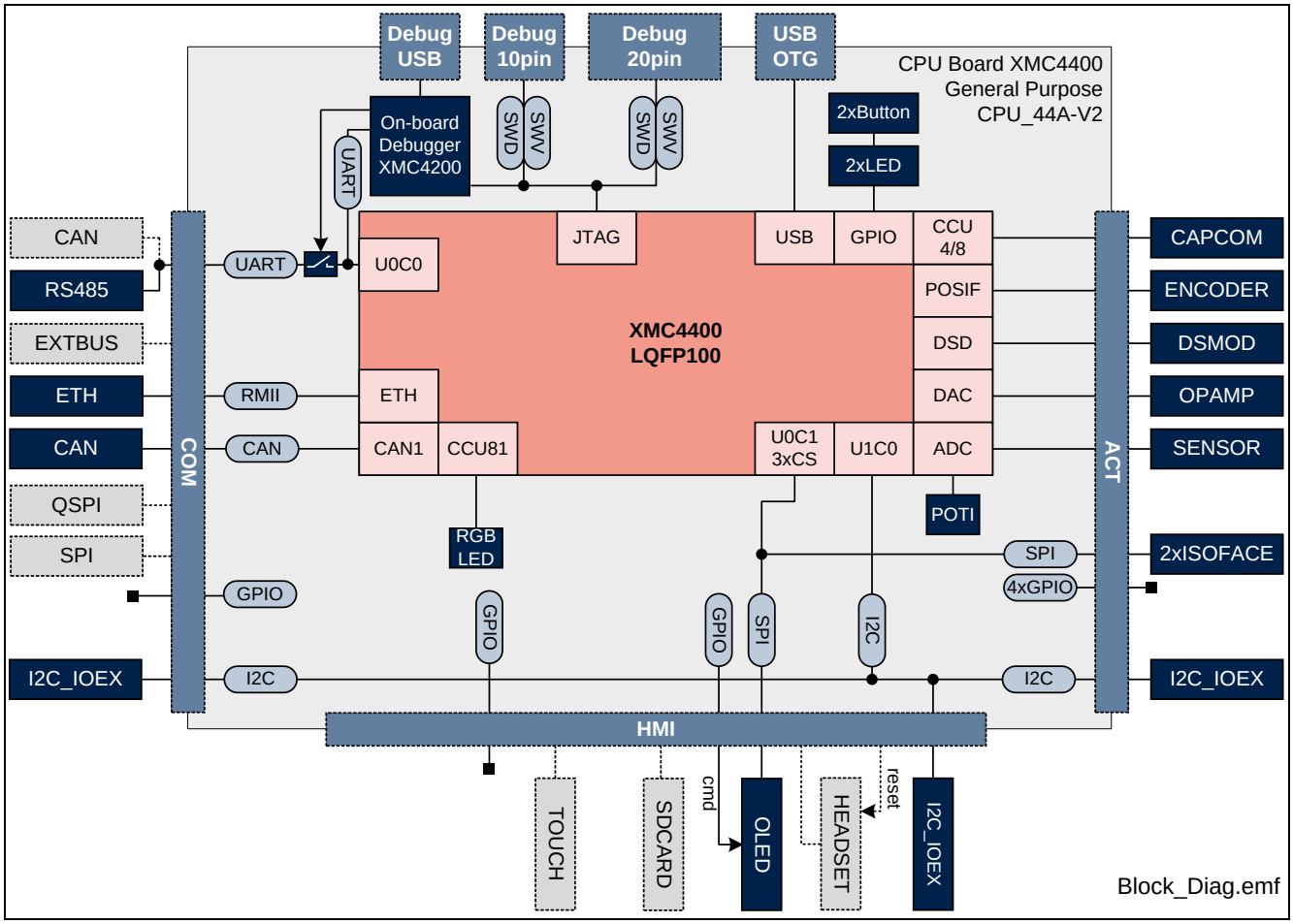

Figure 1 CPU_44A-V2 Board Block Diagram

2 Hardware Description

The following sections give a detailed description of the hardware and how it can be used.

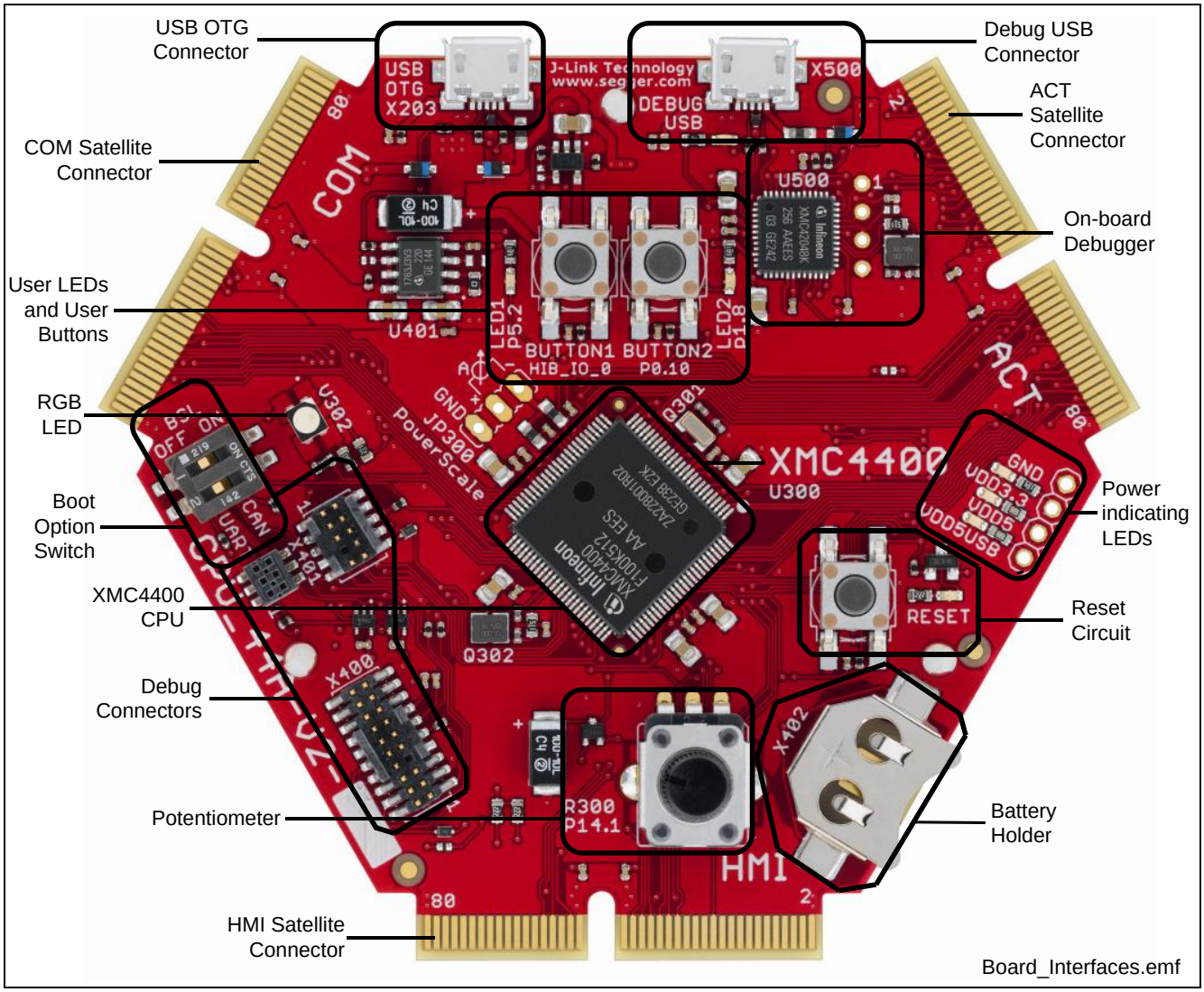

Figure 2 CPU Board XMC4400 General Purpose (CPU_44A-V2)

2.1 Power Supply

The CPU_44A-V2 board can be powered via either of the USB plugs (5 V); however, there is a current limit that can be drawn from the host PC through USB. If the CPU_44A-V2 board is used to drive other satellite cards e.g. MOT_GPDLV-V2 and the total system current required exceeds 500 mA, then the CPU_44A-V2 board needs to be powered by a satellite cards. These satellite cards support external power supply.

The typical current drawn by the CPU board without any satellite cards connected is about 190 mA (@5 V).

For powering the board through an USB interface, connect the USB cable provided with the kit to either of the Micro-USB connector on board as shown in Figure 3.

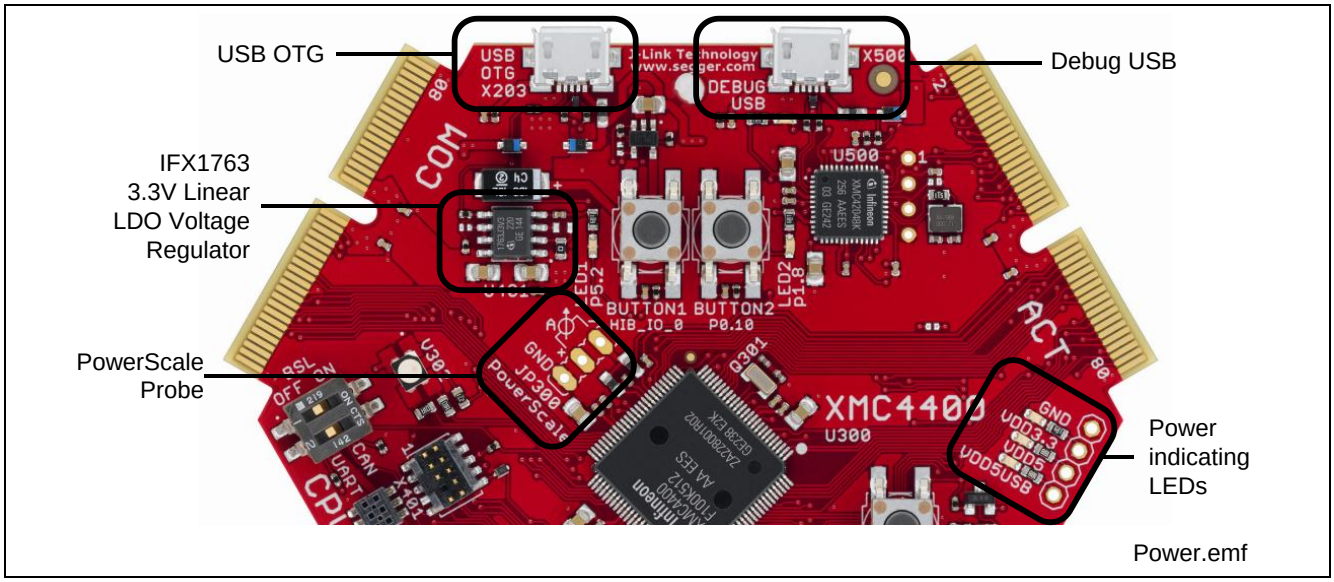

Figure 3 Powering Option

To indicate the power status of the CPU_44A-V2 board three power indicating LED's are provided on board (see Figure 3). The LED will be "ON" when the corresponding power rail is powered.

Table 1 Power status LED's

LED Reference	Power Rail	Voltage	Note
V401	VDD5	5 V	Must always be "ON"
V402	VDD5USB	5 V	"ON" if powered by USB OTG connector X203 "OFF" in all other supply cases
V403	VDD3.3	3.3 V	Must always be "ON"

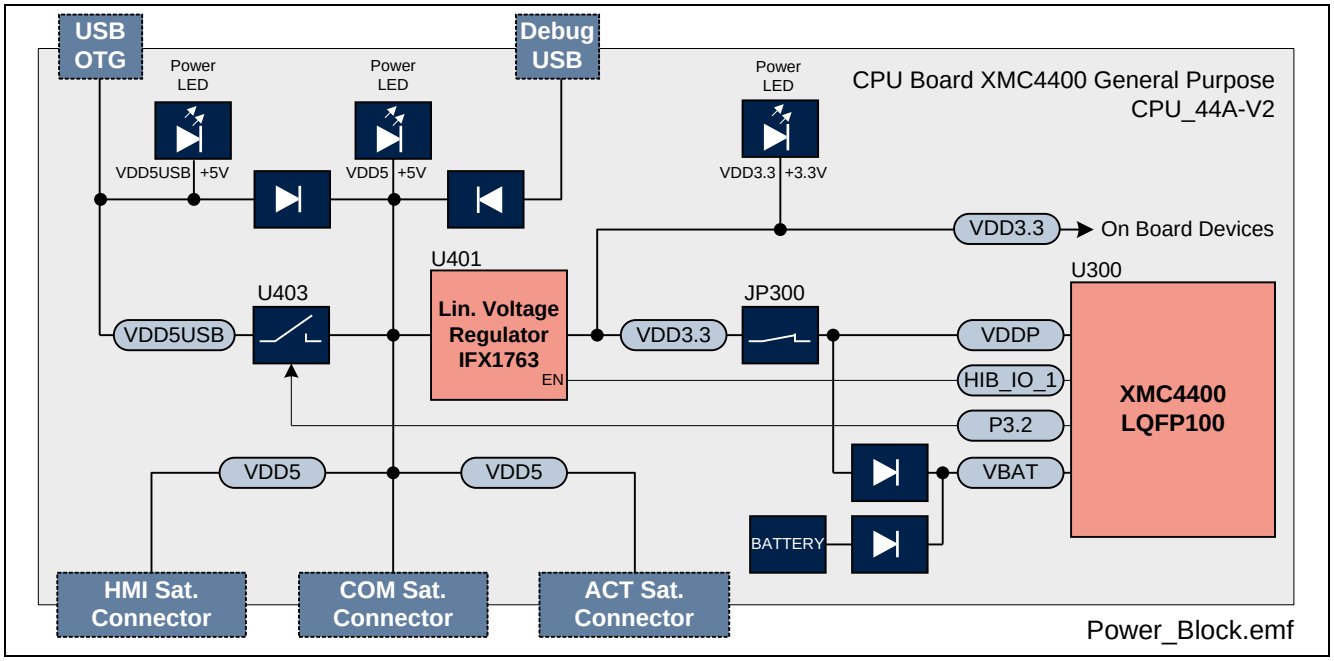

Figure 4 Block Diagram Of Power Supply

Hitex PowerScale probe is provided on the CPU_44A-V2 board to measure the power consumption of the XMC4400 device.

Table 2 Power Measurement

Jumper	Function	Description
JP300	PowerScale	A Hitex PowerScale probe can be connected for current sensing the VDD3.3 (CPU power source). Default: pos. 1-2 (closed) *Note: On the PCB there is a shorting trace between pin 1-2. This trace has to be cut first, before using PowerScale. Pin 3 is GND.*

2.2 Reset

A reset signal connected to the low-active PORST# pin of the target CPU (U300) can be issued by

- an on-board Reset Button (SW400, RESET)
- an on-board debug device (U500)
- an external debugger connected to either Cortex Debug connector X400 or X401

The RESET signal is routed to all satellite connectors. The reset circuit includes a red LED (V407) to indicate the reset status: The Reset LED (V407) will be “ON” during active reset state and will be “OFF” if reset is not active.

Be aware that PORST# is a bidirectional reset pin of the XMC4000 family which can also be pulled low by the XMC4000 device itself.

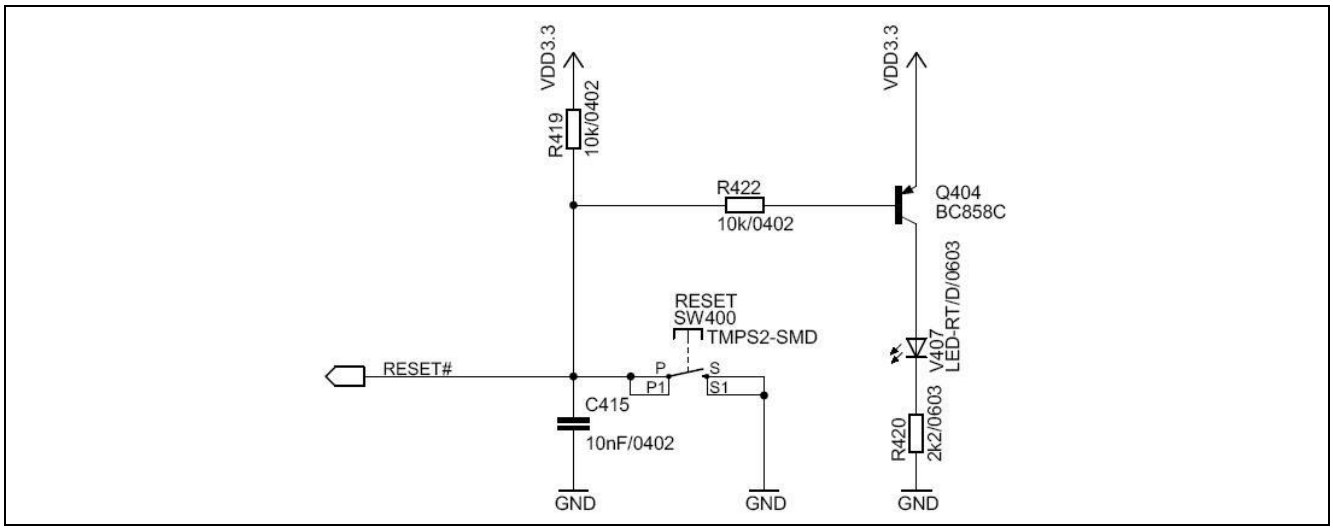

Figure 5 Reset Circuit

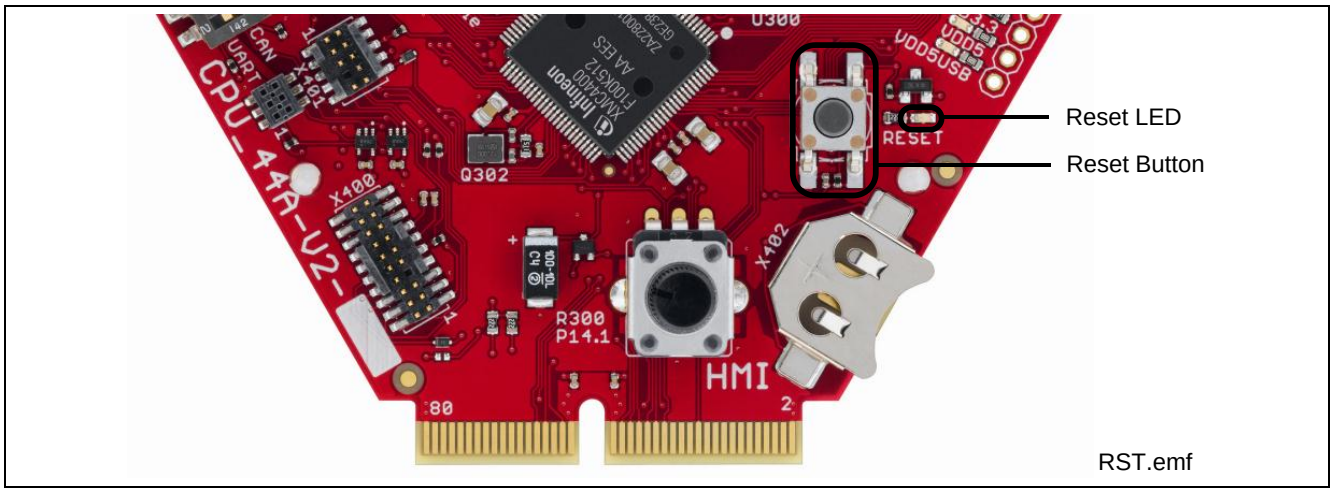

Figure 6 Reset LED and Reset Button

2.3 Clock Generation

An external 12 MHz crystal provides the clock signal to the XMC4400 microcontroller. The drive strength of the oscillator is set to maximum by software, in order to ensure a safe start-up of the oscillator even under worst case conditions. Therefore a serial 510 Ohm resistor will attenuate the oscillations during operations.

For the RTC clock a separate external 32.768 kHz crystal is used on board.

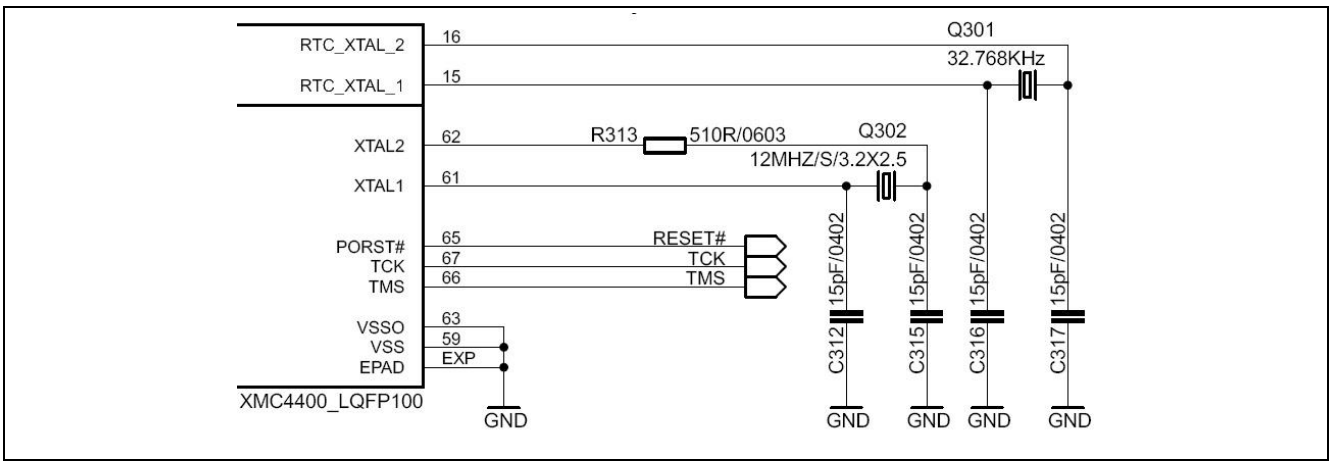

Figure 7 Clock Generation

2.4 Boot Option

During power-on-reset the XMC4400 latches the dip switch SW300 settings via the TCK and the TMS pin. Based on the values latched different boot options are possible.

Table 3 Boot Options Settings

BSL (TMS)	CAN/UART (TCK)	Boot Option
OFF (1)	UART (0)	Normal Mode (Boot from flash)
ON (0)	UART (0)	ASC BSL Enabled (Boot from UART)
OFF (1)	CAN (1)	BMI Customized Boot Enabled
ON (0)	CAN (1)	CAN BSL Enabled (Boot from CAN)

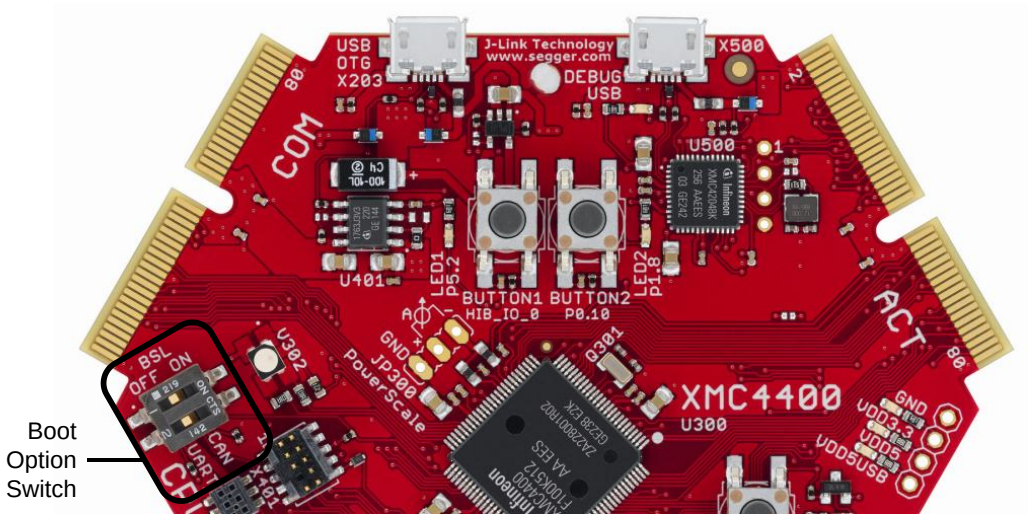

Boot_Switch.emf

Figure 8 Boot Options Switch

2.5 Debug Interface

The CPU_44A-V2 board supports debugging via 3 different channels:

- On-board Debugger
- Cortex Debug Connector (10-pin)
- Cortex Debug+ETM Connector (20-pin)

The Hexagon Application Boards are designed to use “Serial Wire Debug” as debug interface. JTAG debug is not supported by default because the GPIO P0.7, where the required TDI function is mapped to also, is used by various Actuator boards connected to the ACT satellite connector.

Note: It is strongly recommended not to use JTAG debug mode, especially if satellites boards are connected, which uses the GPIO 0.7. For the same reason also do not use the on-board debugger in JTAG mode.

If you want to use the JTAG debug mode through the cortex debug connectors (X400, X401) anyway, enable the JTAG interface of the XMC device by assembling the pull-up resistor R427 (4k7 Ohm) and the resistor R410 (0 - 33 Ohm).

2.5.1 On-board USB Debugger

The on-board debugger [1] supports

- Serial Wire Debug
- Serial Wire Viewer
- Full Duplex UART communication via a USB Virtual COM

[1] Attention: Newer firmware versions of the on-board debugger require the latest J-Link driver (V4.62 or higher) and a Serial Port Driver (CDC driver) installed on your computer. Please check “Install J-Link Serial Port Driver” when installing the latest J-Link driver (see Figure 9)

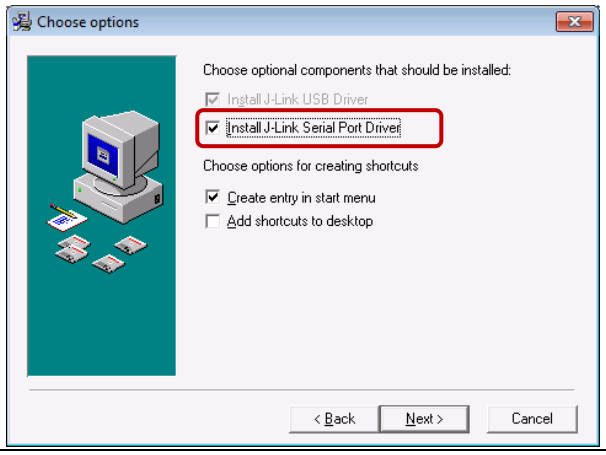

Figure 9 Installation of Serial Port Driver

The on-board debugger can be accessed through the Debug USB connector shown in Figure 10. The Debug LED V502 shows the status during debugging.

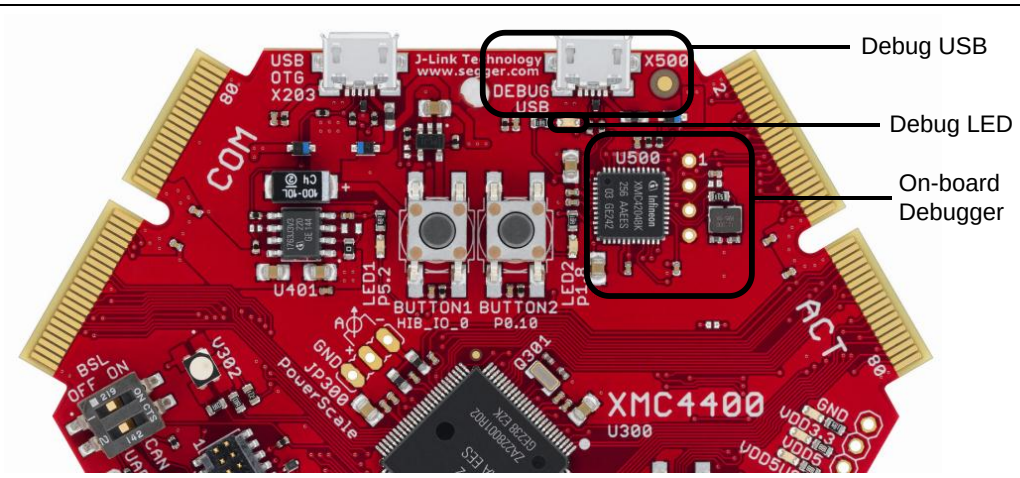

Figure 10 On-Board USB Debugger

When using an external debugger connected to the 10pin/20pin Cortex Debug Connector, the on-board debugger is switched off.

When using the USB virtual COM port function of the on-board debugger the UART interface to the COM satellite is disabled through the switches U301 and U303.

2.5.2 Cortex Debug Connector (10-pin)

The CPU_44A-V2 board supports Serial Wire Debug operation and Serial Wire Viewer operation (via the SWO signal when Serial Wire Debug mode is used) through the 10-pin Cortex Debug Connector.

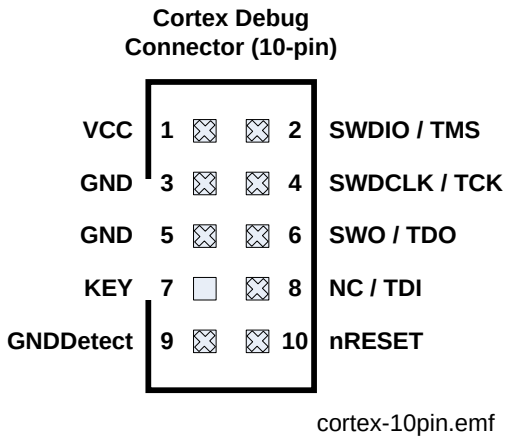

Figure 11 Cortex Debug Connector (10-pin)

Table 4 Cortex Debug Connector (10 Pin)

Pin No.	Signal Name	Serial Wire Debug	JTAG Debug
1	VCC	+3.3 V	+3.3 V
2	SWDIO / TMS	Serial Wire Data I/O	Test Mode Select
3	GND	Ground	Ground
4	SWDCLK / TCK	Serial Wire Clock	Test Clock
5	GND	Ground	Ground
6	SWO / TDO	Trace Data OUT	Test Data OUT
7	KEY	KEY	KEY
8	NC / TDI	Not connected	Test Data IN
9	GNDDetect	Ground Detect	Ground Detect
10	nRESET	Reset (Active Low)	Reset (Active Low)

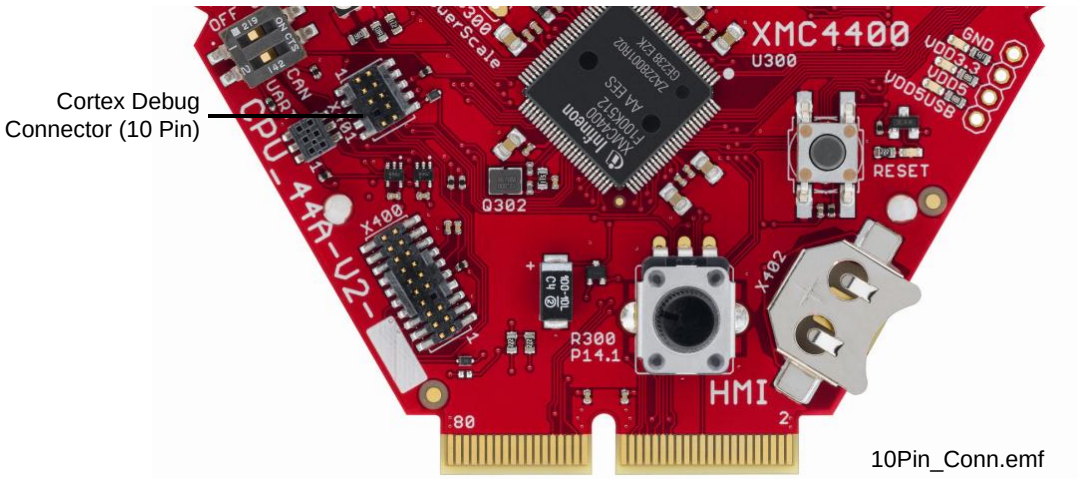

Figure 12 Cortex Debug Connector (10-pin) Layout

2.5.3 Cortex Debug+ETM Connector (20-pin)

The CPU_44A-V2 board supports Serial Wire Debug operation, Serial Wire Viewer operation (via SWO connection when Serial Wire Debug mode is used) through the 20-pin Cortex Debug+ETM Connector. The board does not support the Instruction Trace operation.

JTAG Debug operation additionally would require the TDI (P0.7) signal. By default the TDI signal is disconnected from the Cortex Debug Connectors by a not assembled resistor R410, because the pin P0.7 is used by some Actuator boards connected to the ACT satellite connector.

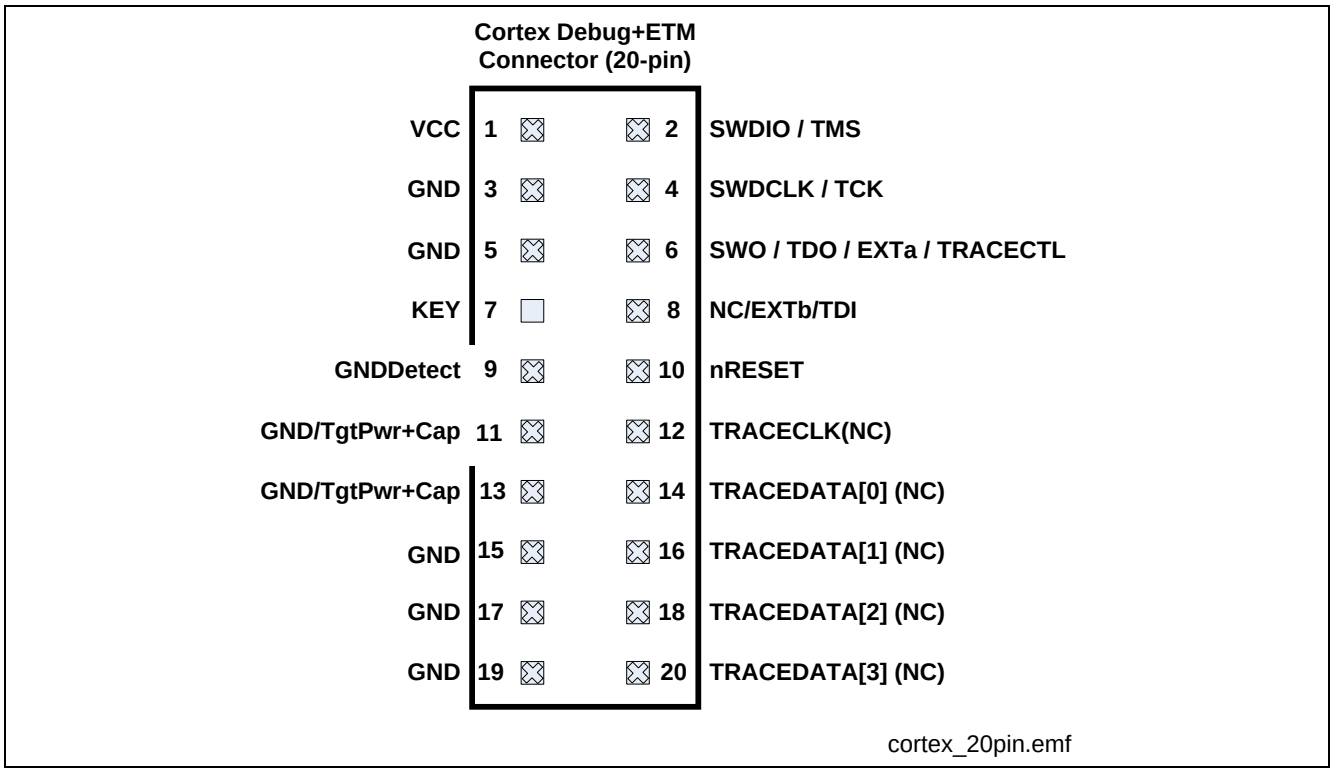

Figure 13 Cortex Debug+ETM Connector (20-pin)

Table 5 Cortex Debug+ETM Connector (20 Pin)

Pin No.	Signal Name	Serial Wire Debug	JTAG Debug
1	VCC	+3.3 V	+3.3 V
2	SWDIO / TMS	Serial Wire Data I/O	Test Mode Select
3	GND	Ground	Ground
4	SWDCLK / TCK	Serial Wire Clock	Test Clock
5	GND	Ground	Ground
6	SWO / TDO	Trace Data OUT	Test Data OUT
7	KEY	KEY	KEY
8	NC / TDI	Not connected	Test Data IN
9	GNDDetect	Ground Detect	Ground Detect
10	nRESET	Reset (Active Low)	Reset (Active Low)
11	GND/TgtPwr+Cap	Ground	Ground
12	TRACECLK*	TRACECLK*	TRACECLK*
13	GND/TgtPwr+Cap	Ground	Ground
14	TRACEDATA[0]*	TRACEDATA[0]*	TRACEDATA[0]*
15	GND	Ground	Ground

Table 5 Cortex Debug+ETM Connector (20 Pin)

Pin No.	Signal Name	Serial Wire Debug	JTAG Debug
16	TRACEDATA[1]*	TRACEDATA[1]*	TRACEDATA[1]*
17	GND	Ground	Ground
18	TRACEDATA[2]*	TRACEDATA[2]*	TRACEDATA[2]*
19	GND	Ground	Ground
20	TRACEDATA[3]*	TRACEDATA[3]*	TRACEDATA[3]*

*Note: * Not connected on the CPU_44A-V2 board.*

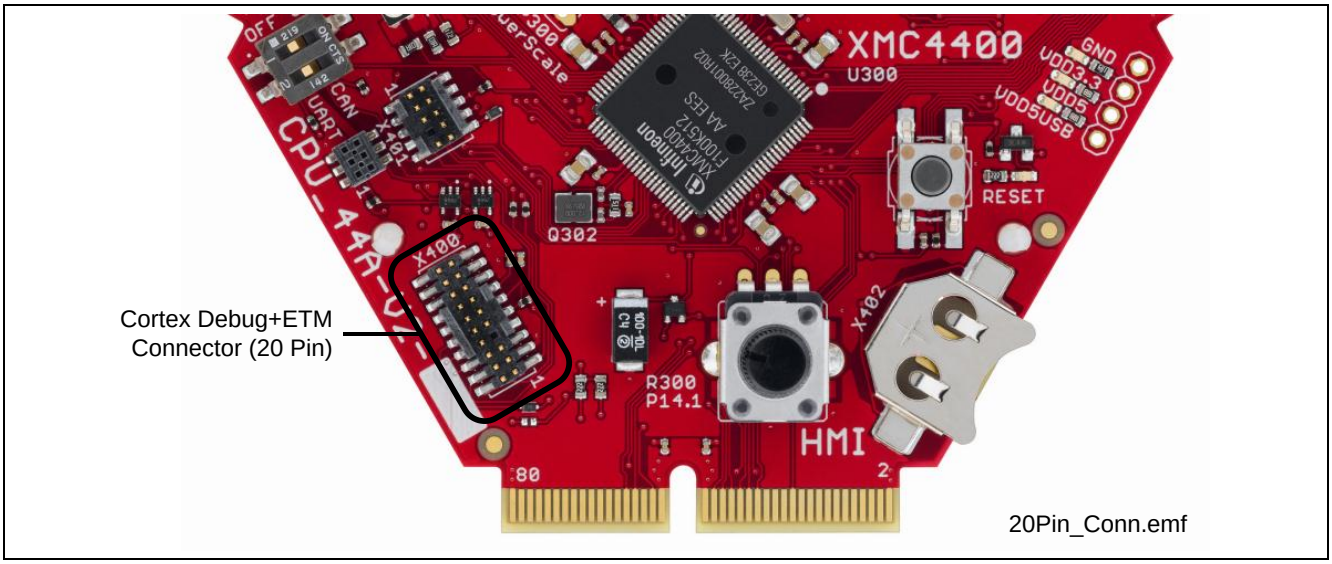

Figure 14 Cortex Debug+ETM Connector (20-pin) Layout

2.6 RGB LED

The CPU_44A-V2 board has a tricolored LED. The LED glows with either Red/Blue/Green colors as controlled by the GPIO pins given below.

Table 6 RGB LED Connections

Pin No. / Function	LED Color
P5.7 / CCU81.OUT02	RED
P1.11 / CCU81.OUT11	GREEN
P1.10 / CCU81.OUT21	BLUE

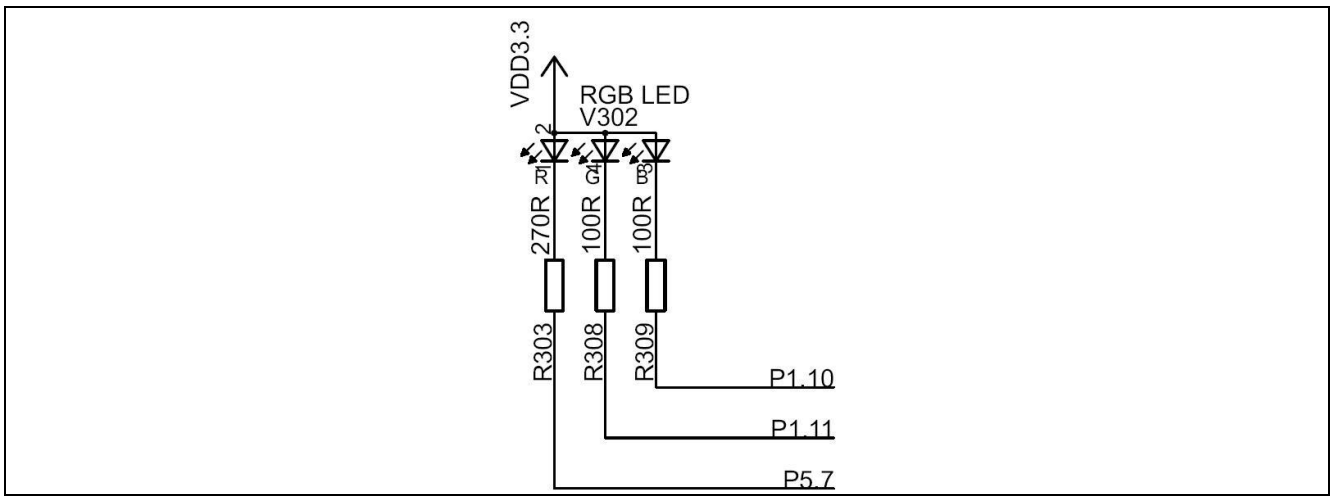

Figure 15 RGB LED

2.7 USB

The XMC4400 supports USB interface in host only mode, device only mode or as an OTG Dual Role Device (DRD). In USB device mode, power is expected through VBUS (pin 1 of X203C) from an external host (e.g. PC). When the current consumption of the application running on the Hexagon Application system is higher than 500 mA, power from an external source through satellite cards shall be used.

Note: Some PCs, notebooks or hubs have a weak USB supply which is not sufficient for proper supply. In this case use an external 5 Volt power supply or a powered USB hub.

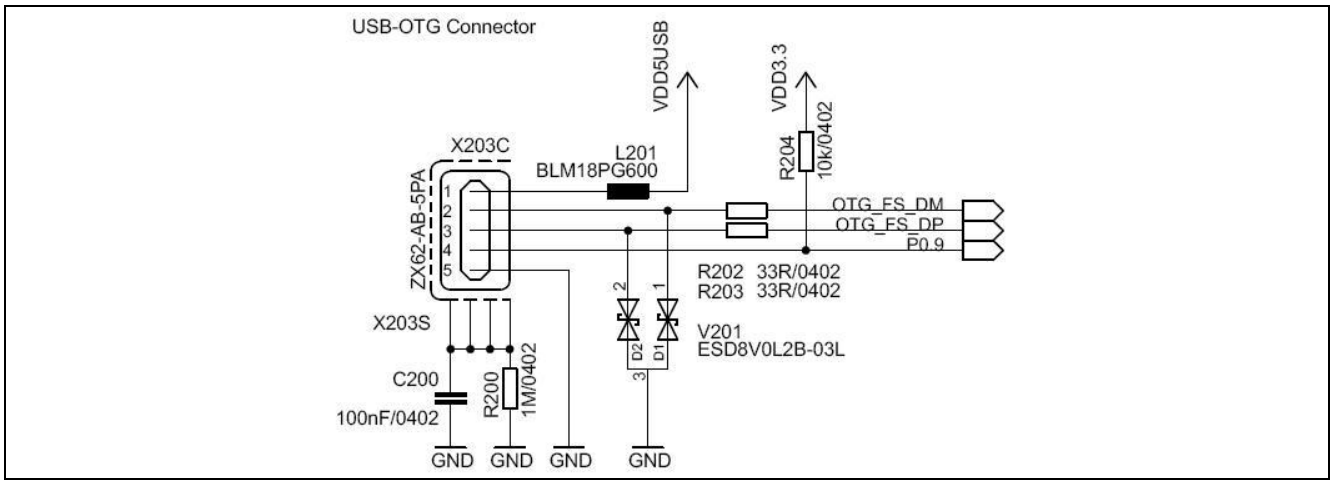

Figure 16 USB Connector

USB ID pin of the USB connector (pin 4 of X203C) is connected to the port pin P0.9 of the XMC4400. On this port pin the USD identification signal (USB.ID) of XMC4000 USB module is mapped to. An OTG device will detect whether a USB Micro-A or Micro-B plug is inserted by checking the ID pin. When the ID = FALSE a Micro-A connector is plugged in and when ID = TRUE a Micro-B connector is plugged in. When the ID is true the XMC4400 acts as a USB host else as a USB device.

Table 7 USB micro AB connector Pinot

Pin No.	Pin Name	Pin Description
1	VBUS	5 V
2	D-	Data Minus
3	D+	Data Plus
4	ID	Identification
5	GND	Ground

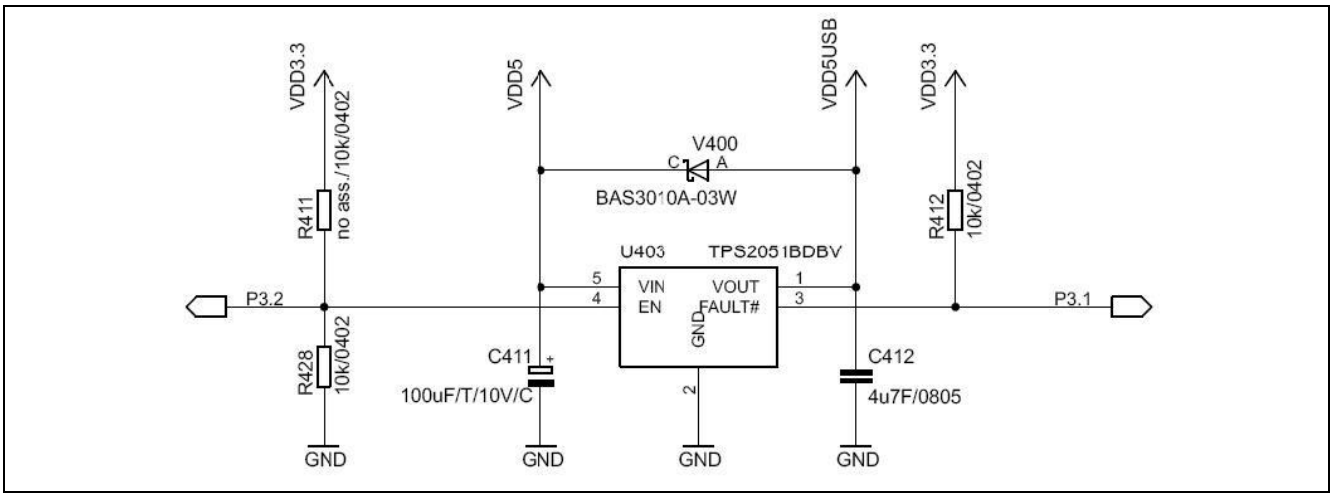

Figure 17 USB power generation - Host/OTG mode

In the host only mode and OTG mode the CPU_44A-V2 board is capable of supplying power to the connected device (e.g. USB mouse). The board has a power-switch which is controlled by the USB.BUSDRIVE signal of the XMC4400. The USB.BUSDRIVE signal is mapped to port pin P3.2 (active high).
In the Host/OTG mode a low active FAULT signal indicates to the port pin P3.1 of the XMC4400, if more than 500 mA current is drawn by the external device.
Diode V400 will allow powering the board through USB in all USB modes via e.g. a PC.

2.8 RTC

The XMC4400 CPU has two power domains, the Core Domain and Hibernate Domain.

The Core Domain (VDDP pins) is connected to the VDD3.3 rail. An on-board LDO voltage regulator generates VDD3.3 (3.3 V) from VDD5 (5 V).

The Hibernate Domain is powered via the auxiliary supply pin VBAT, which is supplied by either a 3 V coin cell (size 1216, 1220, 1225) plugged into the battery holder or 3.3 V (VDD3.3) generated by the on-board voltage regulator.

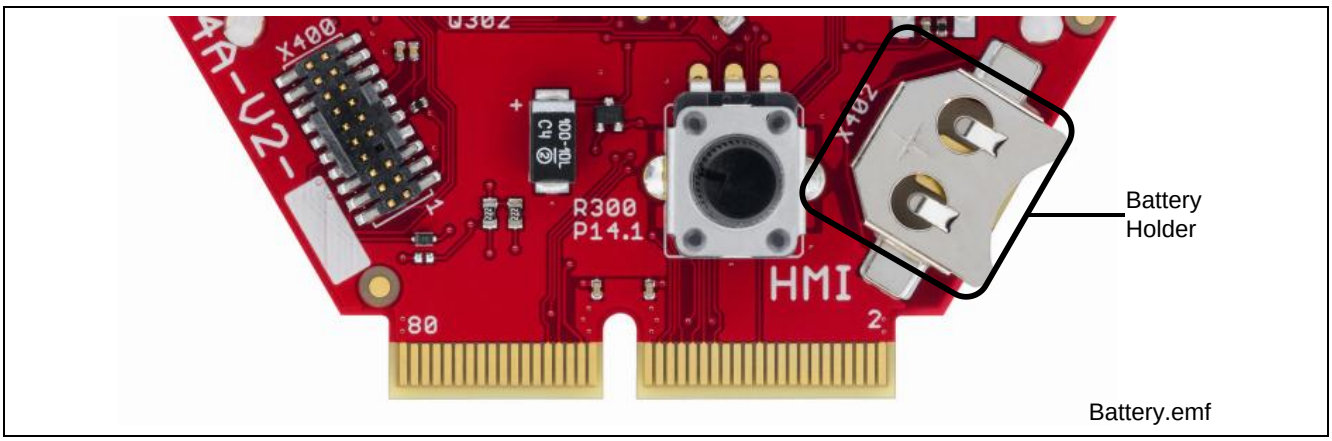

Figure 18 Battery Holder for Coin Cells

The Real Time Clock (RTC) is located in the hibernate domain. The XMC4400 uses the HIB_IO_1 signal (active low) to shut down the external LDO voltage regulator which generates the VDD3.3 (Core Domain). Even if the Core Domain is not powered the Hibernate Domain will operate if VBAT is available. The RTC keeps running as long as the Hibernate Domain is powered via the auxiliary supply VBAT. The RTC is capable to wake-up the whole system from Hibernate mode by setting HIB_IO_1 to high.

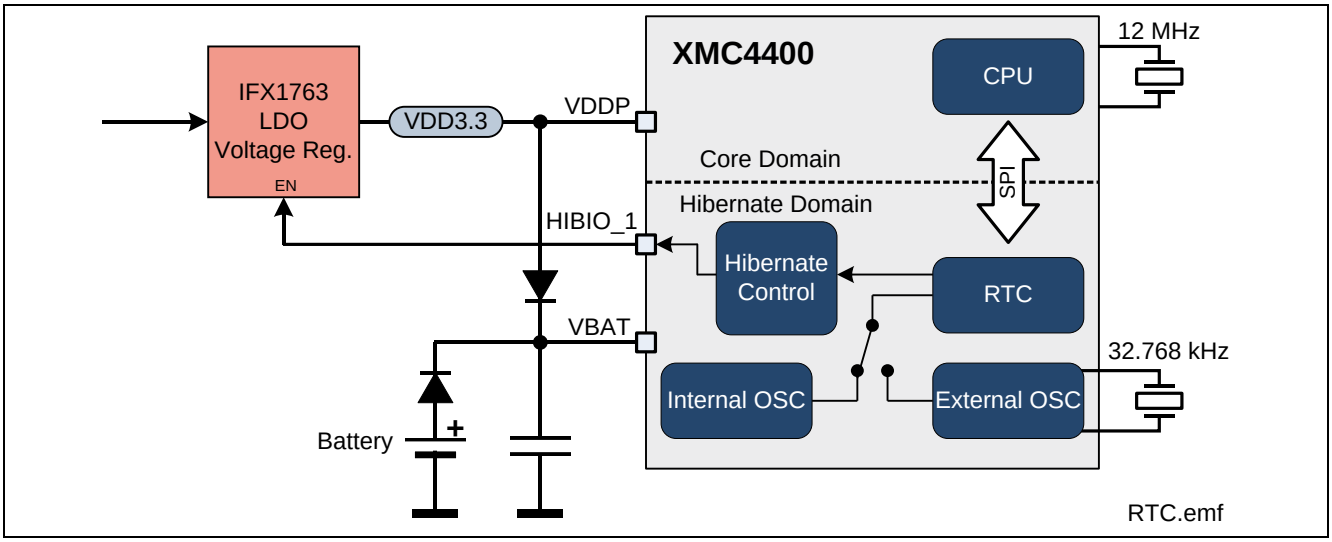

Figure 19 XMC4400 Power Domains and Real Time Clock

2.9 User LEDs and User Buttons

The port pins P5.2 and P1.8 of the XMC4400 are connected to the LEDs V300 and V301 respectively. More User LED's are available through the I2C GPIO expander on most of the satellite cards.

Table 8 User LEDs

LED	Connected to Port Pin
V300	GPIO P5.2
V301	GPIO P1.8

Two User Buttons, SW301 and SW302 are connected to P0.10 and HIB_IO_0 of XMC4400.

Table 9 User Buttons

Button	Connected to Port Pin
BUTTON1 / SW301	HIB_IO_0
BUTTON2 / SW302	P0.10

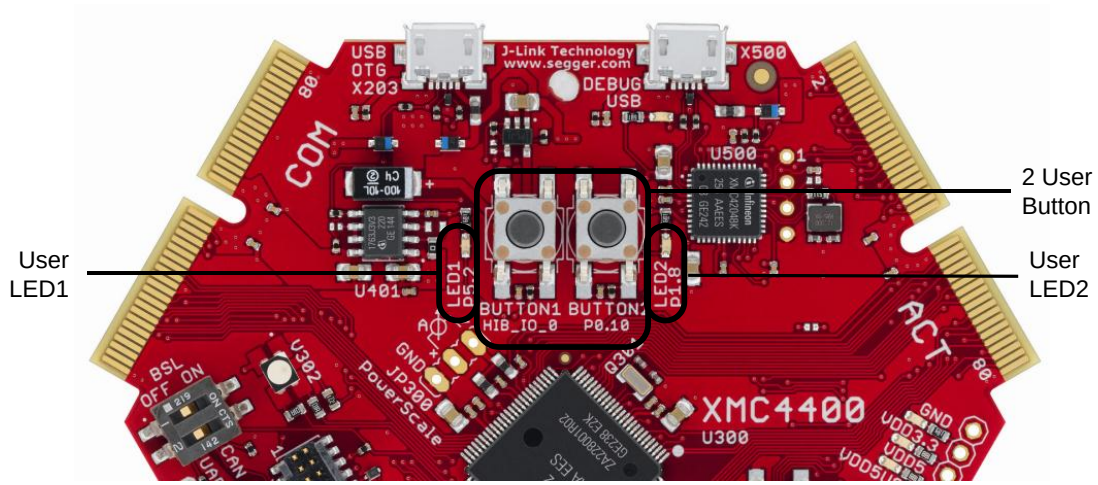

Figure 20 User LEDs and User Buttons

2.10 Potentiometer

The CPU_44A-V2 board provides a potentiometer POT1 for ease of use and testing of the on-chip analog to digital converter. The potentiometer is connected to the analog input G0_CH1 (P14.1). The analog output of the potentiometer ranges from 0 V to 3.3 V.

Table 10 Potentiometer

Potentiometer	Connected to Port Pin
R300	P14.1 / G0_CH1 (Group 0, channel 1)

2.11 Satellite Connectors

The CPU_44A-V2 board provides three satellite connectors for application extension by satellite cards:

- COM satellite connector (Communication)
- HMI satellite connector (Human Machine Interface)
- ACT satellite connector (Actuator)

Note: Satellite cards shall be connected to their matching satellite connectors only. (For e.g. COM satellite cards shall be connected to COM satellite connector only)

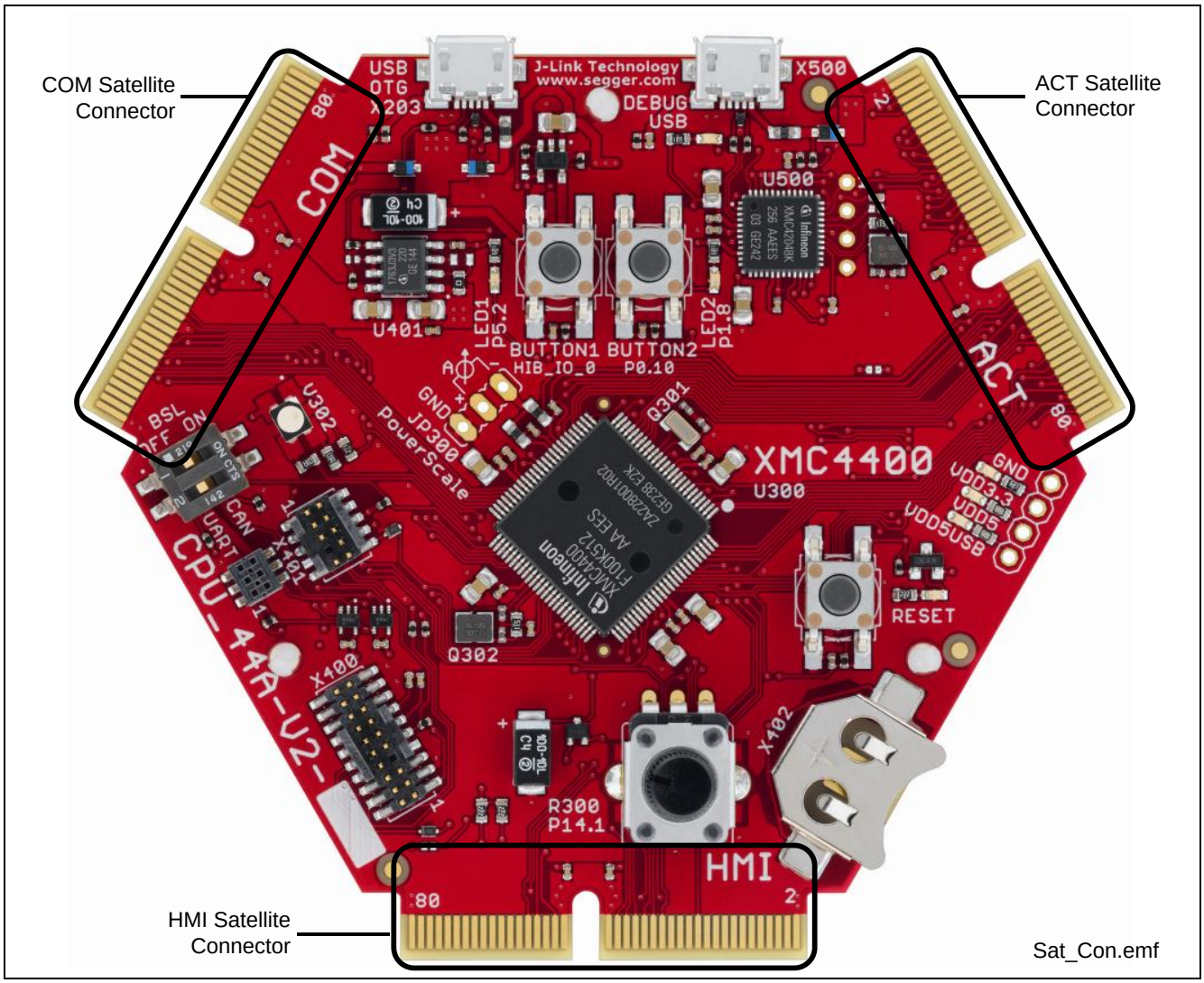

Figure 21 Satellite Connectors

2.11.1 COM Connector

The COM satellite connector on the CPU_44A-V2 board allows interface expansion through COM satellite cards (e.g. COM_ETH-V1)

CPU_44A-V2 XMC Pin	CPU_44A-V2 XMC Function	Satellite Connector Function	Pin	Pin	Satellite Connector Function	CPU_44A-V2 XMC Function	CPU_44A-V2 XMC Pin
VSS	GND	GND	2	1	GND	GND	VSS
nc	nc	qSPI_D0	4	3	qSPI_SCLK	nc	nc
nc	nc	qSPI_D1	6	5	qSPI_CS	nc	nc
nc	nc	qSPI_D2	8	7	qSPI_CS	nc	nc
nc	nc	qSPI_D3	10	9	RSVD	nc	nc
nc	nc	RSVD	12	11	RSVD	nc	nc
P2.9	ETH0_TXD1	ETH_RMII	14	13	ETH_RMII	ETH0_RXD1A	P2.3
P2.8	ETH0_TXD0	ETH_RMII	16	15	ETH_RMII	ETH0_RXD0A	P2.2
P15.9	ETH0_CRS_DVC	ETH_RMII	18	17	ETH_RMII	ETH0_MDO	P2.0
P2.4	ETH0_RXERA	ETH_RMII	20	19	ETH_RMII	ETH0_MDC	P2.7
P15.8	ETH0_CLK_RMIIC	ETH_RMII	22	21	ETH_RMII	ETH0_TX_EN	P2.5
VSS	GND	GND	24	23	RSVD	nc	nc
nc	nc	RSVD	26	25	ASC_DIR	nc	nc
P1.12	CAN_N1_TXD	CAN_TXD	28	27	ASC_RXD	U0C0_DX0A	P1.5
P1.4	CAN_N1_RXDC	CAN_RXD	30	29	ASC_TXD	U0C0_DOUT0	P1.7
nc	nc	SPI_MTSR	32	31	SPI_CSC0	nc	nc
nc	nc	SPI_MRST	34	33	SPI_CSC1	nc	nc
nc	nc	SPI_SCLK	36	35	SPI_CSC2	nc	nc
P0.11	U1C0_SCLKOUT	I2C_SCL	38	37	I2C_SDA	U1C0_DX0D/DOUT0	P2.14
P0.6	P0.6	GPIO	40	39	COM_GPIO1	nc	nc
PORST	RESET#	RESET	42	41	COM_GPIO0	nc	nc
		VDD5	44	43	VDD5		
		VDD5	46	45	VDD5		
nc	nc	EBU_AD	48	47	EBU_ADV	nc	nc
nc	nc	EBU_AD	50	49	EBU_WR	nc	nc
nc	nc	EBU_AD	52	51	EBU_RD	nc	nc
nc	nc	EBU_AD	54	53	EBU_BC	nc	nc
nc	nc	EBU_AD	56	55	EBU_BC	nc	nc
nc	nc	EBU_AD	58	57	EBU_CS	nc	nc
nc	nc	EBU_AD	60	59	EBU_CS	nc	nc
nc	nc	EBU_AD	62	61	GND	GND	VSS
nc	nc	EBU_AD	64	63	EBU_A	nc	nc
nc	nc	EBU_AD	66	65	EBU_A	nc	nc
nc	nc	EBU_AD	68	67	EBU_A	nc	nc
nc	nc	EBU_AD	70	69	EBU_A	nc	nc
nc	nc	EBU_AD	72	71	EBU_A	nc	nc
nc	nc	EBU_AD	74	73	EBU_A	nc	nc
nc	nc	EBU_AD	76	75	EBU_A	nc	nc
nc	nc	EBU_AD	78	77	EBU_A	nc	nc
VSS	GND	GND	80	79	GND	GND	VSS

Figure 22 Satellite Connector Type COM

2.11.2 HMI Connector

The HMI satellite connector on the CPU_44A-V2 board allows interface expansion through HMI satellite cards.

CPU_44A-V2 XMC Pin	CPU_44A-V2 XMC Function	Satellite Connector Function	Pin	Satellite Connector Function	CPU_44A-V2 XMC Function	CPU_44A-V2 XMC Pin
VSS	GND	GND	2	GND	GND	VSS
nc	nc	MMC_nRST	4	MMC_CLK	nc	nc
nc	nc	MMC_DATA0	6	MMC_DATA1	nc	nc
nc	nc	MMC_DATA2	8	MMC_DATA3	nc	nc
nc	nc	MMC_DATA4	10	MMC_DATA5	nc	nc
nc	nc	MMC_DATA6	12	MMC_DATA7	nc	nc
nc	nc	MMC_CMD	14	MMC_BUSPOW	nc	nc
nc	nc	MMC_LED	16	MMC_nSDCD	nc	nc
nc	nc	MMC_SDWC	18	RSVD	nc	nc
nc	nc	RSVD	20	RSVD	nc	nc
nc	nc	RSVD	22	RSVD	nc	nc
P0.12/OLED_RS	P0.12/OLED_RS	OLED_CMD	24	AudioRST	nc	nc
nc	nc	I2S_MTSR	26	I2S_WA	nc	nc
nc	nc	I2S_MRST	28	I2S_MCLK	nc	nc
nc	nc	I2S_SCLK	30	I2S_SYNCLK	nc	nc
P3.5	U0C1_DOUT0	SPI_MTSR	32	SPI_CSH0	U0C1_SELO3	P1.13
P4.0	U0C1_DX0E	SPI_MRST	34	SPI_CSH1	nc	nc
P3.6	U0C1_SCLKOUT	SPI_SCLK	36	SPI_CSH2	nc	nc
P0.11	U1C0_SCLKOUT	I2C_SCL	38	I2C_SDA	U1C0_DX0D/DOUT0	P2.14
P0.6	P0.6	GPIO	40	HMI_GPIO1	nc	nc
PORST	RESET#	RESET	42	HMI_GPIO0	nc	nc
		VDD5	44	VDD5		
		VDD5	46	VDD5		
VAREF	VAREF	AREF	48	AGND	AGND	VAGND
nc	nc	DAC1/ADC0	50	DAC0/ADC1	nc	nc
P14.4	VADC_G0CH4	ADC2/DACREF	52	ADC3/ORC0	nc	nc
P14.3	VADC_G0CH3	ADC14	54	ADC15	VADC_G1CH4	P14.12
nc	nc	ADC16	56	ADC17	nc	nc
nc	nc	ADC18	58	ADC19	nc	nc
nc	nc	RSVD	60	RSVD	nc	nc
nc	nc	RSVD	62	RSVD	nc	nc
nc	nc	TP7	64	RSVD	nc	nc
nc	nc	TP6	66	TPx1	nc	nc
nc	nc	TP5	68	TPx0	nc	nc
nc	nc	TP4	70	COL3	nc	nc
nc	nc	TP3	72	COL2	nc	nc
nc	nc	TP2	74	COL1	nc	nc
nc	nc	TP1	76	COL0	nc	nc
nc	nc	TP0	78	COLA	nc	nc
VSS	GND	GND	80	GND	GND	VSS

Figure 23 Satellite Connector Type HMI

2.11.3 ACT Satellite Connector

The ACT satellite connector on the CPU_44A-V2 board allows interface expansion through ACT satellite cards.

CPU_44A-V2 XMC Pin	CPU_44A-V2 XMC Function	Satellite Connector Function	Pin	Pin	Satellite Connector Function	CPU_44A-V2 XMC Function	CPU_44A-V2 XMC Pin
VSS	GND	GND	2	1	GND	GND	VSS
P14.7	PIF0_IN0B	PIF0IN1	4	3	PIF1IN0	nc	nc
P14.6	PIF0_IN1B	PIF0IN2	6	5	PIF1IN1	nc	nc
P14.5	PIF0_IN2B	PIF0IN3	8	7	PIF1IN2	nc	nc
nc	nc	DSDIN0	10	9	PWMN	PWMN	P5.0
P2.6	DSD_IN1B	DSDIN1	12	11	PWMP	PWMP	P5.1
P1.6	DSD_DIN2A	DSDIN2	14	13	DSDCLK0	nc	nc
P0.8 (2)	DSD_DIN0A	DSDIN3	16	15	DSDCLK1	DSD_MCLK0	P1.9
nc	nc	RSVD	18	17	RSVD	nc	nc
P1.0	HRPWM.C0INA	CC_IN0	20	19	CC_IN3	nc	nc
P1.1	HRPWM.C1INA	CC_IN1	22	21	CC_IN4	nc	nc
P1.2	HRPWM.C1INA	CC_IN2	24	23	CC_IN5	nc	nc
P1.15	P1.15	ENA_A	26	25	TRAP_A	CCU80_IN0A	P0.7 (1,6)
P2.15	P2.15	ENA_B	28	27	TRAP_B	CCU40.IN0A	P1.3
P2.10	P2.10	ENA_X	30	29	TRAP_X	CCU42_IN2A	P3.4
P3.5	U0C1_DOUT0	SPI_MTSR	32	31	SPI_CSA0	U0C1_SELO2	P1.14
P4.0	U0C1_DX0E	SPI_MRST	34	33	SPI_CSA1	U0C1_SELO0	P4.1
P3.6	U0C1_SCLKOUT	SPI_SCLK	36	35	SPI_CSA2	nc	nc
P0.11	U1C0_SCLKOUT	I2C_SCL	38	37	I2C_SDA	U1C0_DX0C/DOUT0	P2.14
P0.6	P0.6	GPIO	40	39	ACT_GPIO1	nc	nc
PORST	RESET#	RESET	42	41	ACT_GPIO0	nc	nc
		VDD5	44	43	VDD5		
VAREF	VAREF	VDD5	46	45	VDD5		VAGND
P14.8	VADC_G1CH0	AREF	48	47	AGND	AGND	P14.9
P14.4	VADC_G0CH4	DAC1/ADC0	50	49	DAC0/ADC1	VADC_G1CH1	nc
nc	nc	ADC2/DACREF	52	51	ADC3/ORC0	nc	P14.0
P14.15	VADC_G1CH7	ADC4/ORC1	54	53	ADC5/ORC2	VADC_G0CH0 (4)	P14.14
P14.2	VADC_G0CH2	ADC6/ORC3	56	55	ADC7	VADC_G1CH6	P15.3
P15.2	VADC_G2CH2	ADC8	58	57	ADC9	VADC_G2CH3	P14.13
nc	nc	ADC10	60	59	ADC11	VADC_G1CH5	nc
P0.5 (6)	CCU80_OUT00	ADC12	62	61	ADC13	nc	nc
P0.2 (6)	CCU80_OUT01	PWMA0_H	64	63	PWMB0_H	nc	nc
P0.4 (6)	CCU80_OUT10	PWMA0_L	66	65	PWMB0_L	nc	nc
P0.1	CCU80_OUT11	PWMA1_H	68	67	PWMB1_H	nc	nc
P0.3 (6)	CCU80_OUT20	PWMA1_L	70	69	PWMB1_L	nc	nc
P0.0	CCU80_OUT21	PWMA2_H	72	71	PWMB2_H	nc	nc
P3.3	CCU42_OUT3	PWMA2_L	74	73	PWMB2_L	nc	nc
P3.0	CCU42_OUT0	PWMX0	76	75	PWMX2	nc	nc
VSS	GND	PWMX1	78	77	PWMX3	nc	nc
		GND	80	79	GND	GND	VSS

Figure 24 Satellite Connector Type ACT

(1) P0.7 can also be used for JTAG Debugging (TDI)
(2) P0.8 is used as TRST in order to enable JTAG Debug
(3) This pin is connected with the satellite connector via an analog switch
(4) This ADC input does not support “Out of Range Detection”
(5) This pin must be “enabled” by a solder jump.
(6) Support High Resolution PWM

3 Production Data

3.1 Schematics

This chapter contains the schematics for the CPU board:

- Satellite Connectors, USB-OTG
- XMC4400
- Power, Debug Connectors, Reset
- On-board Debugger

The board has been designed with Eagle. The full PCB design data of this board can also be downloaded from www.infineon.com/xmc-dev.

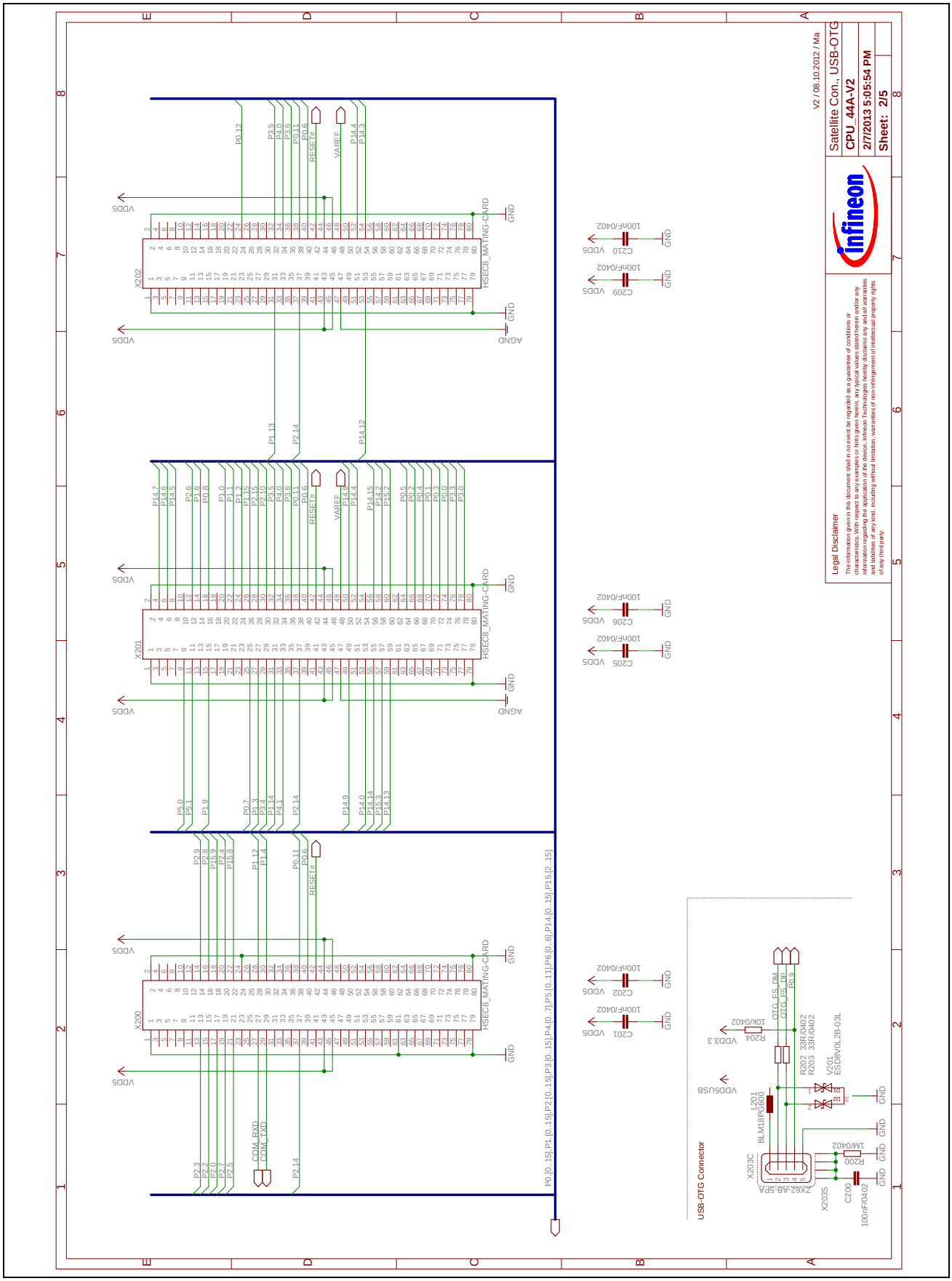

Figure 25 Satellite Connectors, USB-OTG

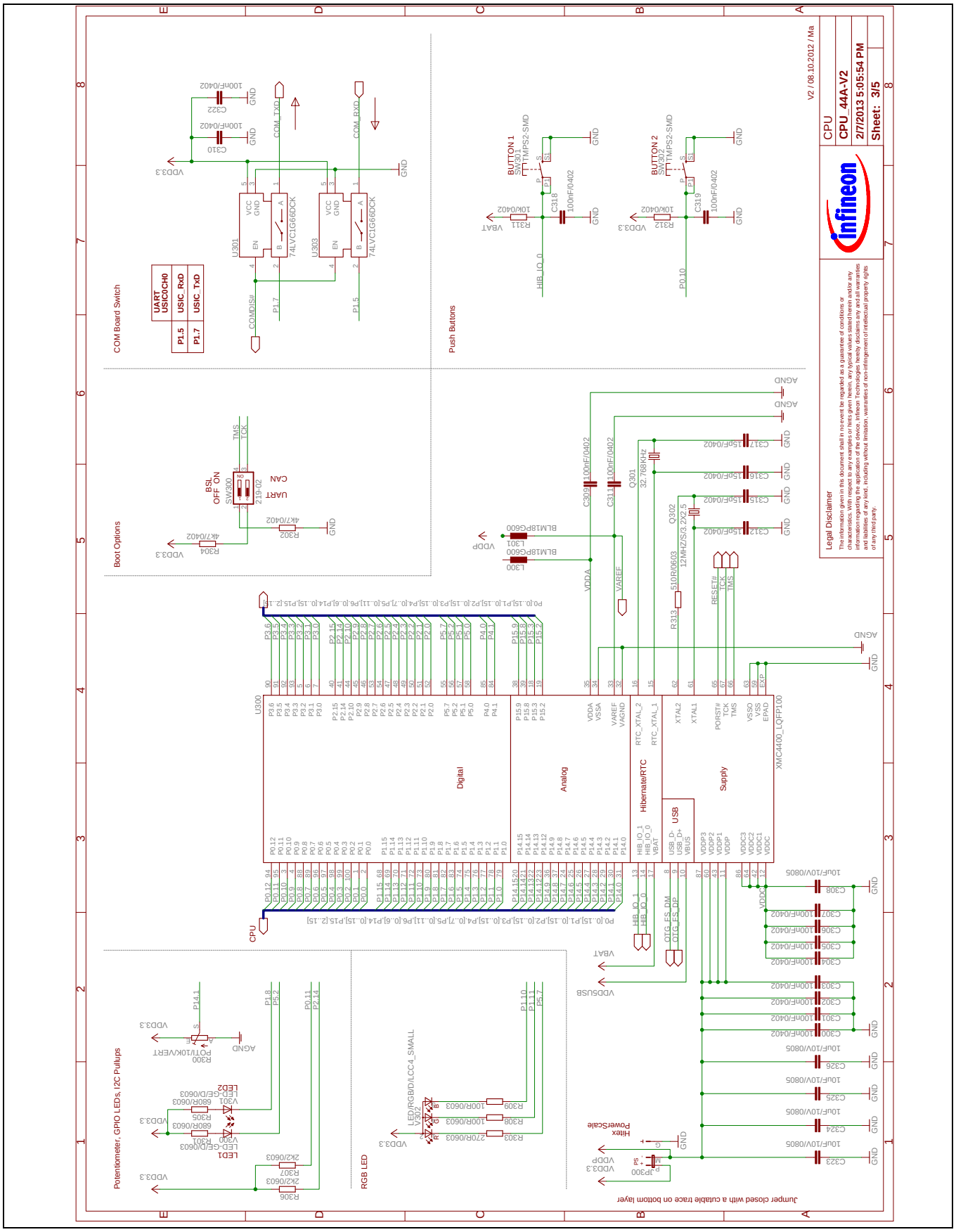

Figure 26 XMC4400

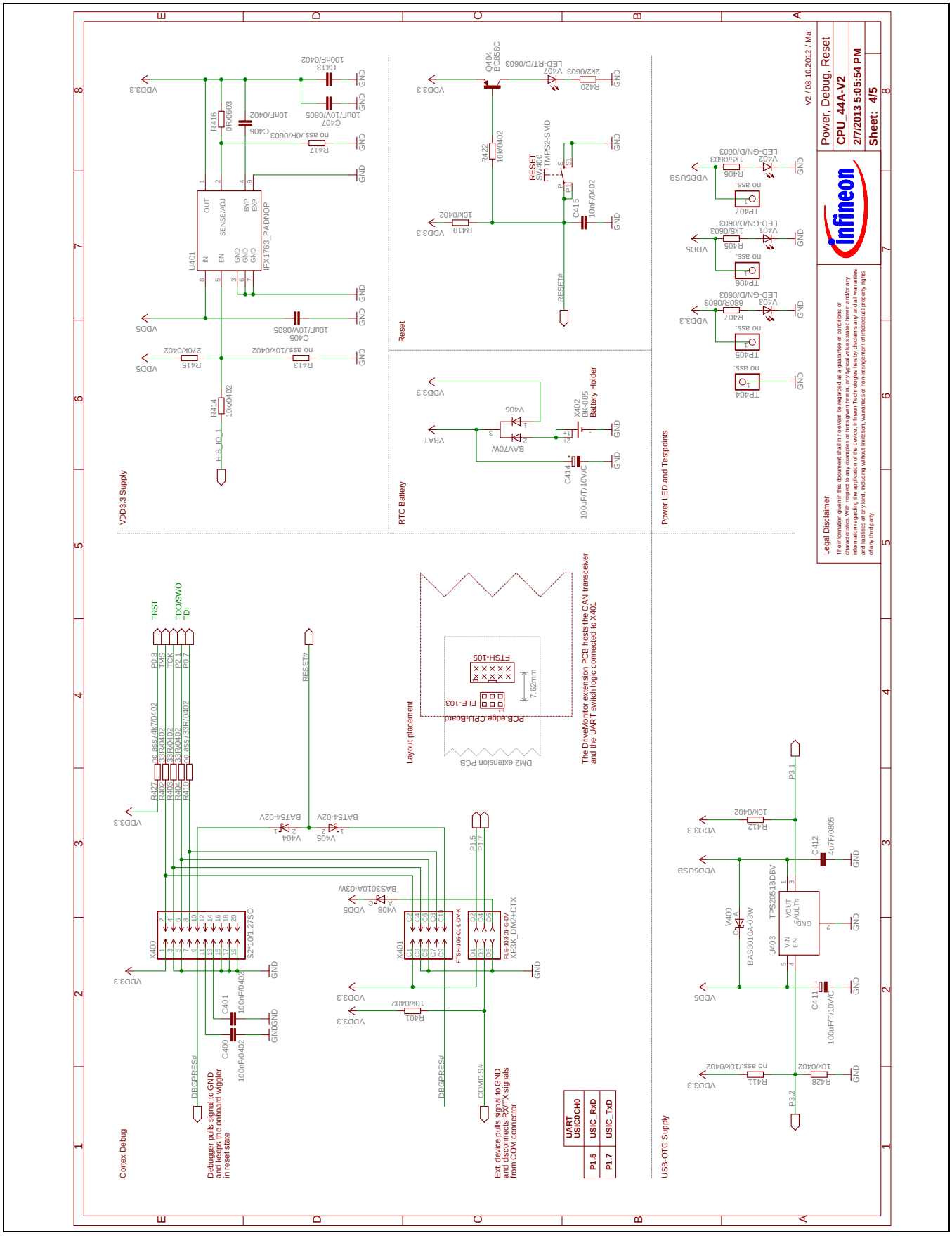

Figure 27 Power, Debug Connectors, Reset

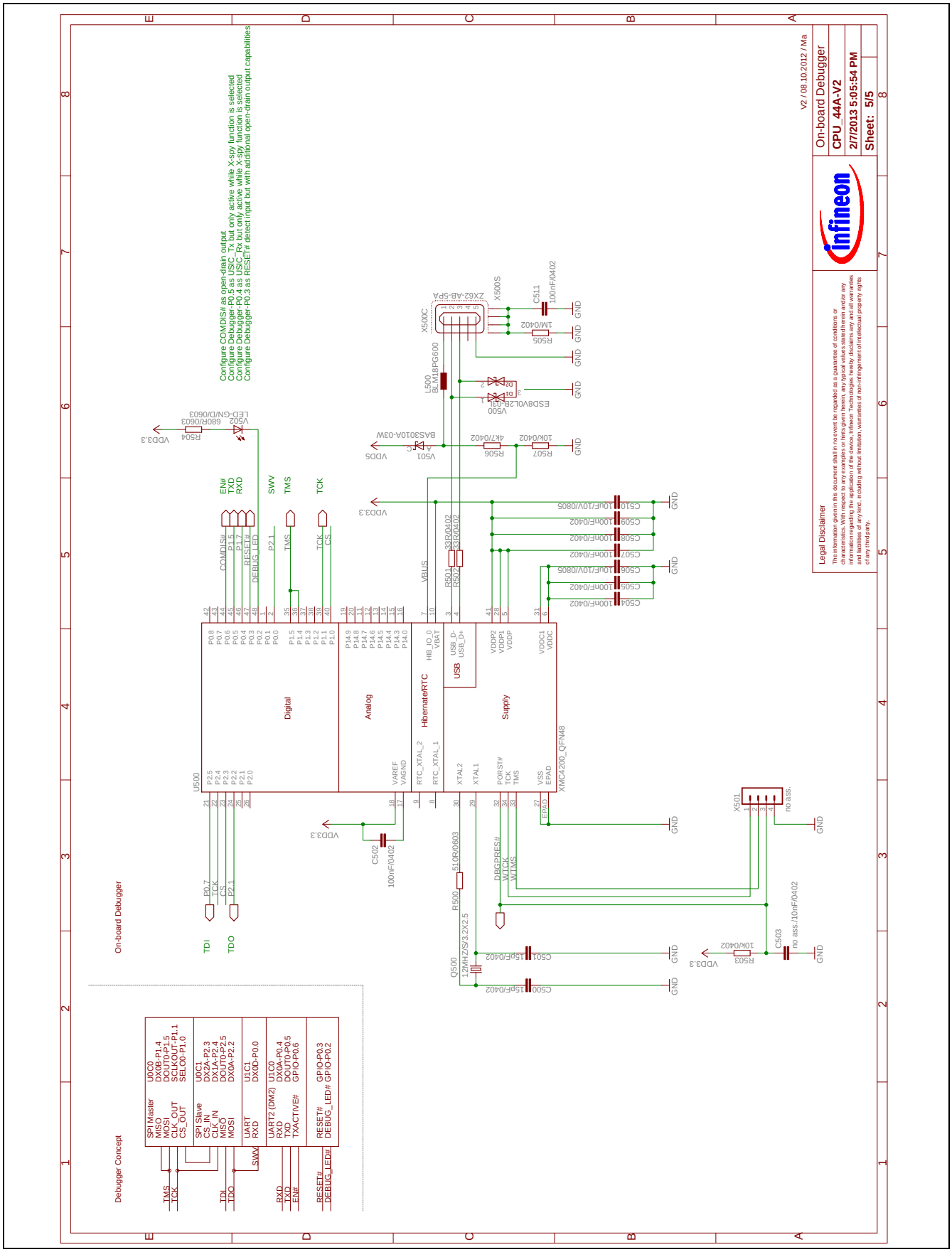

Figure 28 On-board Debugger

3.2 Component Placement and Geometry

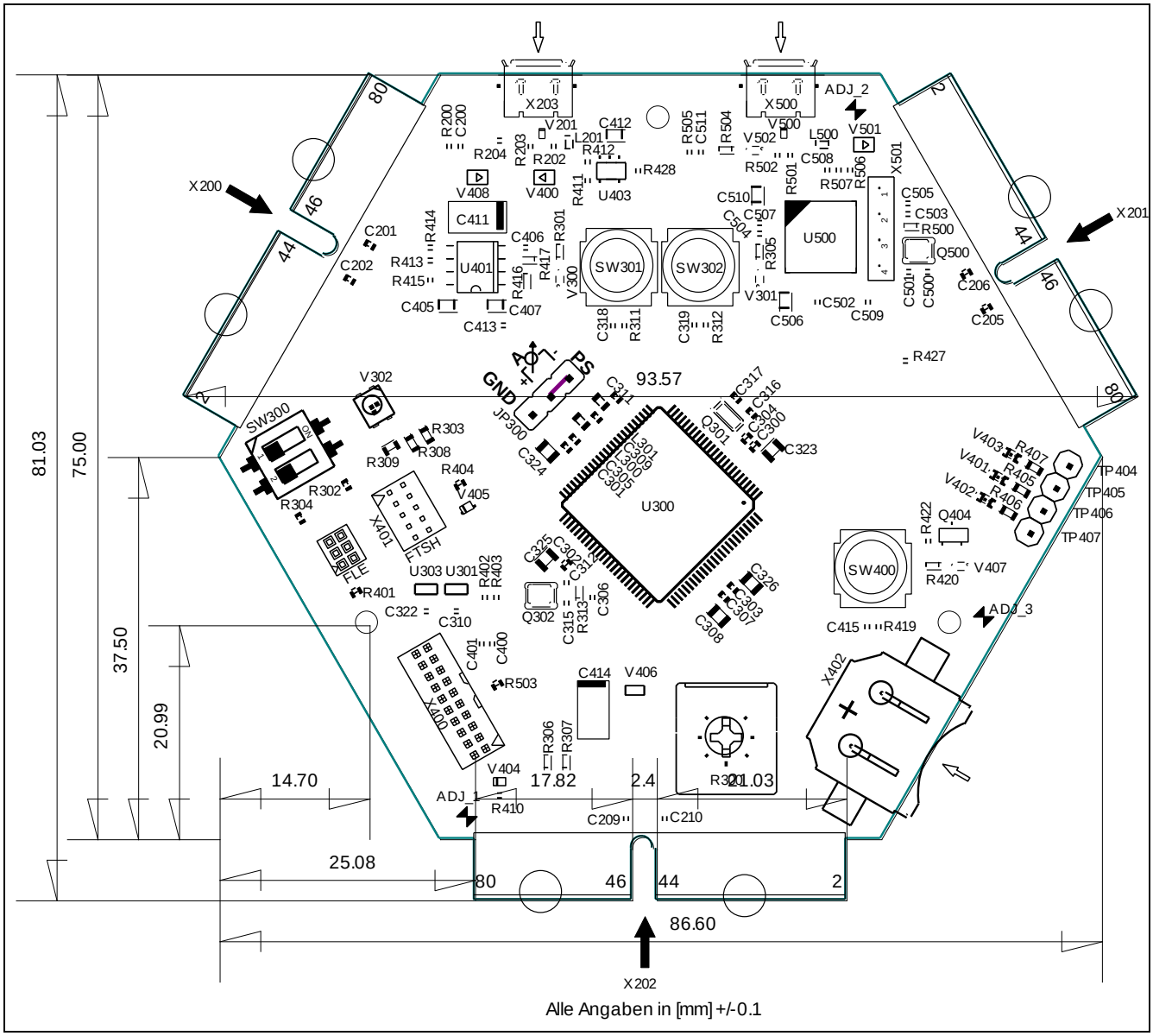

Figure 29 Component Placement and Geometry

3.3 Bill of Material (BOM)

Table 11 BOM of CPU_44A-V2 Board

Pos. No.	Qty	Value	Device	Reference Des.
1	1	0R/0603	Resistor	R416
2	2	1M/0402	Resistor	R200, R505
3	2	1k5/0603	Resistor	R405, R406
4	3	2k2/0603	Resistor	R306, R307, R420
5	3	4k7/0402	Resistor	R302, R304, R506
6	1	4u7F/0805	Capacitor, ceramic	C412
7	11	10k/0402	Resistor	R204, R311, R312, R401, R412, R414, R419, R422, R428, R503, R507
8	2	10nF/0402	Capacitor	C406, C415
9	9	10uF/10V/0805	Capacitor, ceramic	C308, C323, C324, C325, C326, C405, C407, C506, C510
10	2	12MHZ/S/3.2X2.5	Crystal, NX3225GD, NDK	Q302, Q500
11	6	15pF/0402	Capacitor	C312, C315, C316, C317, C500, C501
12	1	32.768KHz	Crystal, NX3215SA, NDK	Q301
13	5	33R/0402	Resistor	R402, R403, R404, R501, R502
14	2	33R/0402	Resistor	R202, R203
15	2	74LVC1G66DCK	IC, Single Analog Switch	U301, U303
16	2	100R/0603	Resistor	R308, R309
17	31	100nF/0402	Capacitor	C200, C201, C202, C205, C206, C209, C210, C300, C301, C302, C303, C304, C305, C306, C307, C309, C310, C311, C318, C319, C322, C400, C401, C413, C502, C504, C505, C507, C508, C509, C511
18	2	100uF/T/10V/C	Capacitor, bipolar	C411, C414
19	1	219-02	Dual DIP-Switch, 0.1" SMD	SW300
20	1	270R/0603	Resistor	R303
21	1	270k/0402	Resistor	R415
22	2	510R/0603	Resistor	R313, R500
23	4	680R/0603	Resistor	R301, R305, R407, R504
24	3	BAS3010A-03W	Diode, SOD323, Infineon	V400, V408, V501
25	2	BAT54-02V	Diode, SC79, Infineon	V404, V405
26	1	BAV70W	Diode, SOT323, Infineon	V406
27	1	BC858C	Transistor, SOT23-3, Infineon	Q404
28	1	BK-885	Battery Holder, 12mm Coin Cell	X402
29	4	BLM18PG600	Ferrite Bead, 0603, Murata	L201, L300, L301, L500
30	2	ESD8V0L2B-03L	Diode, TSLP-3-1, Infineon	V201, V500
31	3	FIDUCIAL	FIDUCIAL	ADJ_1, ADJ_2, ADJ_3
32	3	HSEC8_MATING-CARD	Connector, Edgecard, Samtec	X200, X201, X202
33	1	IFX1763-3.3	Voltage Regulator, 3.3V LDO, Infineon	U401
34	2	LED-GE/D/0603	LED, yellow	V300, V301
35	4	LED-GN/D/0603	LED, green	V401, V402, V403, V502
36	1	LED-RT/D/0603	LED, red	V407
37	1	LED/RGB/D/LCC4_SMALL	LED, RGB, LCC4_SMALL	V302
38	1	POTI/10K/VERT	Potentiometer, K09K1130A8G, ALPS	R300
39	1	S2*10/1.27SO	Connector, FTSH-110-01-L-DV-K-P, Samtec	X400

Table 11 BOM of CPU_44A-V2 Board

Pos. No.	Qty	Value	Device	Reference Des.
40	3	TMPS2-SMD	Switch, tactile	SW301, SW302, SW400
41	1	TPS2051BDBV	IC, Power Switch	U403
42	1	XE3K_DM2+CTX	Connector, FTSH-105-01-LM-DV-K, without pin 7, Samtec Connector, FLE-103-01-G-DV, Samtec	X401
43	1	XMC4200_QFN48	IC, XMC4200, QFN48, Infineon	U500
44	1	XMC4400_LQFP100	IC, XMC4400, LQFP100, Infineon	U300
45	2	ZX62-AB-5PA	Connector, Micro-USB, Hirose	X203, X500
46	1	no ass.	Pinheader, 4-pin, 0.1" TH	X501
47	4	no ass.	Pinheader, 1-pin, 0.1" TH	TP404, TP405, TP406, TP407
48	1	no ass./0R/0603	Resistor	R417
49	1	no ass./4k7/0402	Resistor	R427
50	2	no ass./10k/0402	Resistor	R411, R413
51	1	no ass./10nF/0402	Capacitor	C503
52	1	no ass./33R/0402	Resistor	R410
53	1	no ass.	Pinheader, 3-pin, 0.1" TH, Hitex PowerScale	JP300

w w w . i n f i n e o n . c o m

Published by Infineon Technologies AG