THIS DRAWING IS UNPUBLISHED. RELEASED FOR PUBLICATION
© COPYRIGHT - BY - ALL RIGHTS RESERVED.

LOC	DIST
DY	-

REVISIONS

P	LTR	DESCRIPTION	DATE	DWN	APVD
	E1	REVISED PER ECO-11-005139	19MAR11	RK	HMR

Notes:

1. CUTOUT FEATURE AVAILABLE ONLY ON 5H ASSY P/N -1 (40P) AND -2 (60P).
2. 0.00038 MIN GOLD PLATING (15u INCHES GOLD PLATING)

	REMARKS	QTY	HEIGHT TYPE	J	H	G	F	E	D	C	B	A	POS	CONN P/N	PART NO.
	0.00076 MIN GOLD PLATING (30u INCHES GOLD PLATING)								61.8	88	84.4	42.2	140	1- -6	7- -6
									53.8	↑	↑	↑	120	1- -5	7- -5
		450			16				45.8	72	68.4	34.2	100	1- -4	7- -4
									37.8	56	52.4	26.2	80	1- -3	7- -3
									29.8	44	40.4	20.2	60	1- -2	7- -2
		700	7H		12		6.85	7.25	21.8	32	28.4	14.2	40	1-5179030-1	7-5177986-1
									69.8	↑	↑	↑	160	-8	6- -8
									61.8	88	84.4	42.2	140	-6	6- -6
									53.8	↑	↑	↑	120	-5	6- -5
		550			16				45.8	72	68.4	34.2	100	-4	6- -4
									37.8	56	52.4	26.2	80	-3	6- -3
									29.8	44	40.4	20.2	60	-2	6- -2
		800	6H		12		5.85	6.25	21.8	32	28.4	14.2	40	5084615-1	6-5177986-1
									69.8	↑	↑	↑	160	-8	5- -8
									61.8	88	84.4	42.2	140	-6	5- -6
									53.8	↑	↑	↑	120	-5	5- -5
		650			16				45.8	72	68.4	34.2	100	-4	5- -4
									37.8	56	52.4	26.2	80	-3	5- -3
									29.8	44	40.4	20.2	60	-2	5- -2 ⚠1
		900	5H	12	12	17	4.85	5.25	21.8	32	28.4	14.2	40	5084614-1	5-5177986-1 ⚠1
⚠2		450	7H	12	16	17	6.85	7.25	53.8	72	68.4	34.2	120	3-5179030-5	4-5177986-5
	0.00002 MIN GOLD PLATING (7.8u INCHES GOLD PLATING)								85.8	↑	↑	↑	200	1- -0	4- -0
									77.8	104	100.4	50.2	180	-9	3- -9
									69.8	↑	↑	↑	160	-8	3- -8
									61.8	88	84.4	42.2	140	-6	3- -6
									53.8	↑	↑	↑	120	-5	3- -5
		400			16				45.8	72	68.4	34.2	100	-4	3- -4
									37.8	56	52.4	26.2	80	-3	3- -3
									29.8	44	40.4	20.2	60	-2	3- -2
		600	8H		12		7.85	8.25	21.8	32	28.4	14.2	40	5179031-1	3-5177986-1
									85.8	↑	↑	↑	200	1- -0	3- -0
									77.8	104	100.4	50.2	180	-9	2- -9
									69.8	↑	↑	↑	160	-8	2- -8
									61.8	88	84.4	42.2	140	-6	2- -6
									53.8	↑	↑	↑	120	-5	2- -5
		450			16				45.8	72	68.4	34.2	100	-4	2- -4
									37.8	56	52.4	26.2	80	-3	2- -3
									29.8	44	40.4	20.2	60	-2	2- -2
		700	7H		12		6.85	7.25	21.8	32	28.4	14.2	40	5179030-1	2-5177986-1
									61.8	88	84.4	42.2	140	-6	1- -6
									53.8	↑	↑	↑	120	-5	1- -5
		550			16				45.8	72	68.4	34.2	100	-4	1- -4
									37.8	56	52.4	26.2	80	-3	1- -3
									29.8	44	40.4	20.2	60	-2	1- -2
		800	6H		12		5.85	6.25	21.8	32	28.4	14.2	40	5179029-1	1-5177986-1
									69.8	↑	↑	↑	160	-8	-8
									61.8	88	84.4	42.2	140	-6	-6
									53.8	↑	↑	↑	120	-5	-5
		650			16				45.8	72	68.4	34.2	100	-4	-4
									37.8	56	52.4	26.2	80	-3	-3
									29.8	44	40.4	20.2	60	-2	-2 ⚠1
		900	5H	12	12	17	4.85	5.25	21.8	32	28.4	14.2	40	5177984-1	5177986-1 ⚠1

AMP 1470-19 REV 09MAY94

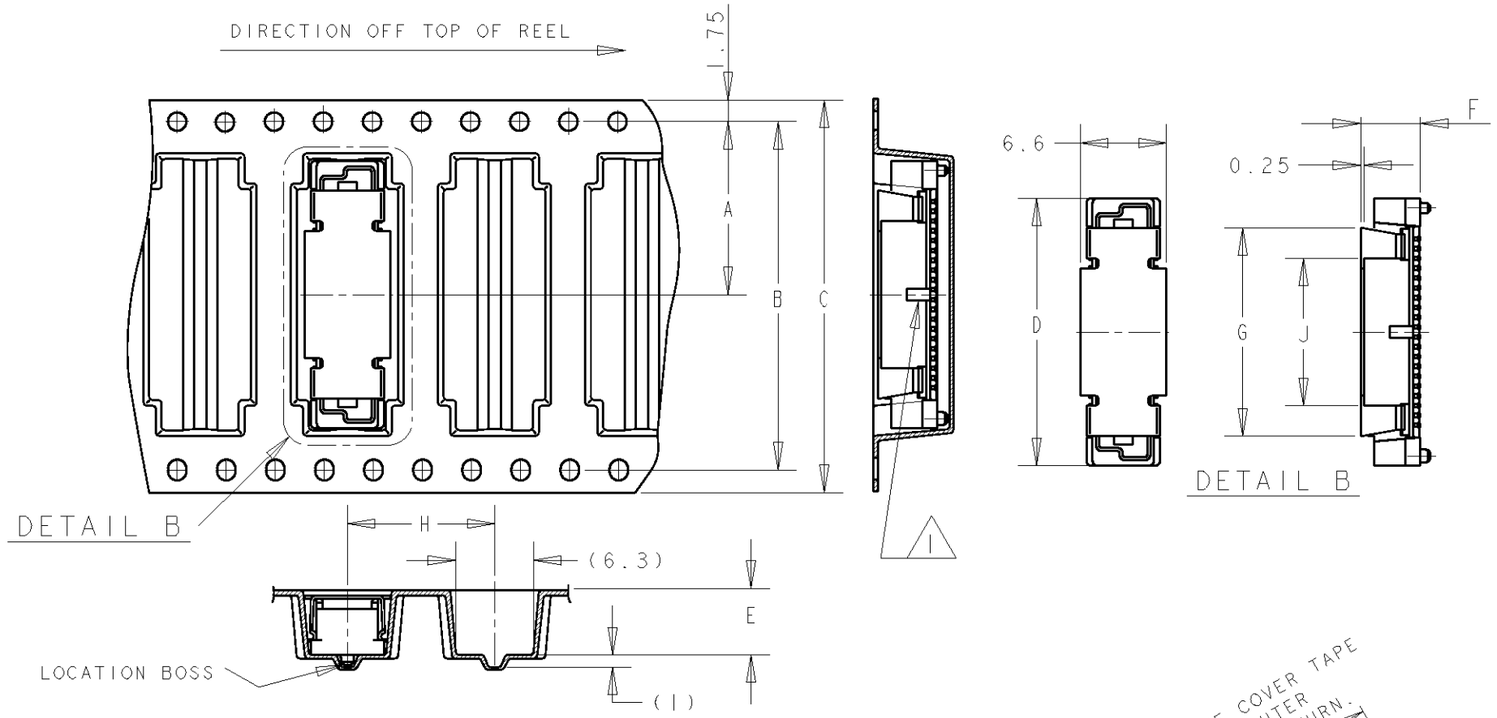

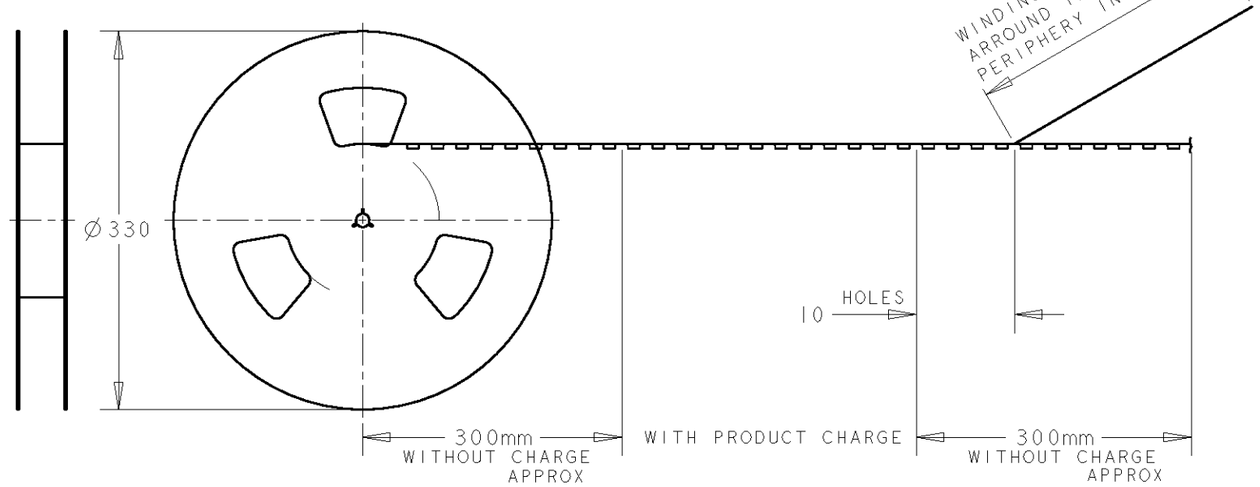

DIMENSIONS: mm	TOLERANCES UNLESS OTHERWISE SPECIFIED: 0 PLC ±- 1 PLC ±0.3 2 PLC ±0.25 3 PLC ±0.2 4 PLC ±- ANGLES ±3°	DWN FLORENCE TAN 30AUG04	TE Connectivity
		CHK ERIC TNG	NAME PLUG ASSEMBLY (0.5 BOSS LENGTH) FOR FH 0.8 B-T-B CONN. ON TAPING
		APVD SF LEONG	
		PRODUCT SPEC 108-5390	
		APPLICATION SPEC 114-5254	SIZE A3 / CAGE CODE 00779 / DRAWING NO C-5177986
MATERIAL -	FINISH -	WEIGHT -	
		CUSTOMER DRAWING	SCALE 2:1 / SHEET 1 OF 1 / REV E1