Air Cylinder

Series CJ2

ø6, ø10, ø16

Long life, increased by 50% (In-house comparison)

The mounting accuracy of the cylinder and the wear resistance of the seals have been improved, thus dramatically increasing the cylinder's life to more than 1.5 times that of the CJ1 Series.

Compact and lightweight:

The lateral width of the cover has been reduced approximately 10% from the CJ1 Series. In addition to a weight reduction of over 30%, a space-saving configuration has been achieved.

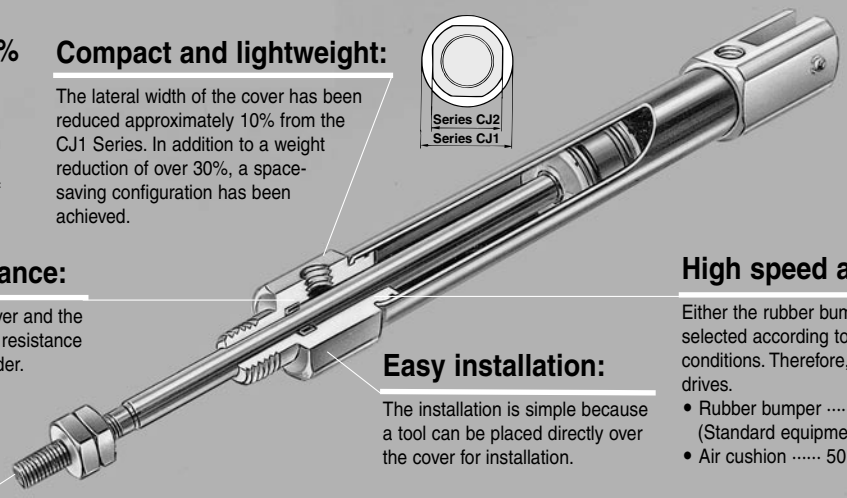

Improved wear resistance:

The bearing portions of the rod cover and the clevis have been improved in wear resistance to ensure the longevity of the cylinder.

High speed actuation possible:

Either the rubber bumper or the air cushion can be selected according to the drive speed conditions. Therefore, it can support high speed drives.

- Rubber bumper ····· 50 to 750mm/s (Standard equipment)
- Air cushion ····· 50 to 1000mm/s

Easy installation:

The installation is simple because a tool can be placed directly over the cover for installation.

Reduced piston rod deflection:

The clearance between the bushing and the piston rod has been decreased to achieve higher accuracy, thus decreasing the deflection of the piston rod.

Variations

Series	Action	Rod	Basic	Standard variations: Built-in magnet	Standard variations: Air cushion	Standard variations: Clean	Standard variations: Copper free	Bore size (mm)	Page
Standard: CJ2 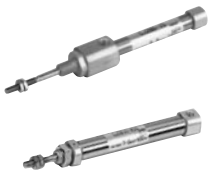	Double acting	Single rod	●	●	●	●	●	6, 10, 16	1-22
		Double rod	●	●	●	●	●		1-33
	Single acting	Single rod, Spring return/extend	●	●			●		1-40
Non-rotating rod: CJ2K	Double acting	Single rod	●	●			●	10, 16	1-50
	Single acting	Single rod, Spring return/extend	●	●					1-55
Built-in speed controller: CJ2Z	Double acting	Single rod	●	●			●		1-62
		Double rod	●	●			●		1-67
Low friction: CJ2Q	Double acting	Single rod	●	●					1-72
Direct mount: CJ2R	Double acting	Single rod	●	●		●			1-76
	Single acting	Single rod, Spring return/extend	●	●					1-81
Non-rotating rod/ Direct mount: CJ2RK	Double acting	Single rod	●	●					1-85
	Single acting	Single rod, Spring return/extend	●	●					1-89

Applicable auto switch	Band mounting	Rail mounting
Reed switch	D-C7/C8, D-C73C/C80C	D-A7/A8, D-A7□H/A80H, D-A73C/A80C, D-A79W
Solid state switch	D-H7□, D-H7C D-H7□W, D-H7BAL, D-H7□F	D-F7/J7, D-F7□V, D-J79C D-F7□W/J79W, D-F7□WV, D-F7BAL, D-F7□F, D-F7NTL

Standard: Double Acting Single Rod

Series CJ2

ø6, ø10, ø16

How to Order

Bore size

6	6mm
10	10mm
16	16mm

Standard stroke (mm)

ø 6	15, 30, 45, 60
ø10	15, 30, 45, 60, 75, 100, 125, 150
ø16	15, 30, 45, 60, 75, 100, 125, 150, 175, 200

Mounting

B	Basic
L	Axial foot
F	Front flange
D	Double clevis (Except for ø6)

Cushion

—	Rubber bumper
A	Air cushion (Except for ø6)

Standard CJ2 [L] [16] — [60] [A] [R]

With auto switch CDJ2 [L] [16] — [60] [A] [R] — [C73] [ ]

With auto switch (built-in magnet)

Band mounting

Rail mounting

Port location on head cover

	ø6	ø10/ø16
—	—	Perpendicular 90°
R	In-line	In-line

∗ Refer to p.1-24 for the configuration.

Auto switch

∗ Refer to the table below for selecting applicable auto switches.

∗ If requiring a built-in magnet cylinder without an auto switch, refer to the model number example below.

Number of switches

—	2
S	1
n	n

Applicable Auto Switches

Style	Special function	Electrical entry	Indicator	Wiring (Output)	Load voltage DC		Load voltage AC	Auto switch model** Band (ø6, ø10, ø16)	Rail (ø10, ø16) Perp.	Rail (ø10, ø16) In-line	Lead wire* 0.5 (—)	3 (L)	5 (Z)	None (N)	Applicable load	
Reed switch	—	Grommet	Yes	3 wire (NPN)	—	5V	—	C76	—	A76H	●	●	—	—	IC	—
				2 wire	—	—	200V	—	A72	A72H	●	●	—	—	—	Relay PLC
					24V	12V	100V	C73	A73	A73H	●	●	●	—		
			No			5V, 12V	≤100V	C80	A80	A80H	●	●	—	—	IC	
		Connector	Yes			12V	—	C73C	A73C	—	●	●	●	●	—	
			No			5V, 12V	≤24V	C80C	A80C	—	●	●	●	●	IC	
	Diagnostic indication (2 colour)	Grommet	Yes			—	—	—	A79W	—	●	●	—	—	—	
Solid state switch	—	Grommet	Yes	3 wire (NPN)	24V	5V, 12V	—	H7A1	F7NV	F79	●	●	○	—	IC	Relay PLC
				3 wire (PNP)				H7A2	F7PV	F7P	●	●	○	—		
				2 wire		12V	—	H7B	F7BV	J79	●	●	○	—	—	
		Connector					—	H7C	J79C	—	●	●	●	●		
	Diagnostic indication (2 colour)	Grommet		3 wire (NPN)		5V, 12V	—	H7NW	F7NWV	F79W	●	●	○	—	IC	
				3 wire (PNP)				H7PW	—	F7PW	●	●	○	—		
				2 wire		12V		H7BW	F9BWV	J79W	●	●	○	—	—	
	Water resistant (2 colour)							H7BA	—	F7BA	—	●	○	—		
	With timer			3 wire (NPN)		5V, 12V		—	—	F7NT	—	●	○	—	IC	
	With diagnostic output (2 colour)			4 wire (NPN)				H7NF	—	F79F	●	●	○	—		
	Latch with diagnostic output (2 colour)					—		H7LF	—	F7LF	●	●	○	—	—	

∗ Lead wire length 0.5m····· — e.g.) C73C 5m·····Z e.g.) C73CZ
3m·····L C73CL None·····N C73CN

∗ Solid state switches marked with" ○ " are manufactured upon receipt of order.

∗∗ "D-A79W" cannot be mounted on bore size ø10 cylinder with air cushion.

Part No. of Cylinder with Built-in Magnet

Symbol "-A" (rail mounting) or "-B" (band mounting) should be suffixed to the part No. of the cylinder with auto switch.

Ex.	Rail mounting	CDJ2B10-45-A
	Band mounting	CDJ2B16-60-B

Specifications

Action		Double acting/Single rod
Fluid		Air
Proof pressure		1.05MPa
Max. operating pressure		0.7MPa
Min. operating pressure	**ø6**	0.12MPa
	ø10, ø16	0.06MPa
Ambient and fluid temperature		Without auto switch: −10°C to 70°C, With auto switch: −10°C to 60°C*
Cushion		Rubber bumper/Air cushion
Lubrication		Non-lube
Thread tolerance		JIS class 2
Stroke tolerance		$^{+1.0}_{0}$
Piston speed		50 to 750mm/s
Allowable kinetic energy	**ø6**	0.012J
	ø10	0.035J
	ø16	0.090J

∗ No freezing

JIS symbol

Double acting/Single rod

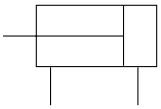

Standard Stroke

(mm)

Bore size	Standard stroke
6	15, 30, 45, 60
10	15, 30, 45, 60, 75, 100, 125, 150
16	15, 30, 45, 60, 75, 100, 125, 150, 175, 200

⚠ Caution

Mounting

① During installation, secure the rod cover and tighten by applying an appropriate tightening force to the retaining nut or to the rod cover body. If the head cover is secured or the head cover body is tightened, the cover could rotate, leading to a deviation.

② Tighten the retaining screws to an appropriate tightening torque within the range given below.
ø6: 2.1 to 2.5Nm, ø10: 5.9 to 6.4Nm, ø16: 10.8 to 11.8Nm

③ To remove and install the snap ring for the knuckle pin or the clevis pin, use an appropriate pair of pliers (tool for installing a C type snap ring). In particular, use a pair of ultra-mini pliers such as the Super Tool CSM-07A for removing and installing the snap rings on the ø10 cylinder.

④ In the case of auto switch rail mounting style, do not remove the rail that is mounted. Because the retaining screws extend into the cylinder, this could lead to an air leak.

Minimum Strokes for Auto Switch Mounting

Mounting	Auto switch model	Number of switches	Min. stroke (mm)
Band mounting (ø6, ø10, ø16)	D-C7 D-C8	2 (same surface)	50
		2(different surfaces)	15
		1	10
	D-H7□ D-H7□W D-H7BAL D-H7NF	2 (same surface)	60
		2 (different surfaces)	15
		1	10
	D-C73C D-C80C D-H7C	2(same surface)	65
		2(different surfaces)	15
		1	10
	D-H7LF	2(same surface)	65
		2 (different surfaces)	25
		1	15
Rail mounting (ø10, ø16)	D-A7/A8 D-A7□H/A80H D-A73C/A80C	2	10
		1	5
	D-F7 D-J79 D-F7□V D-J79C	2	5
		1	5
	D-A79W D-F7□W D-J79W D-F7BAL D-F7□WV D-F79F	2	15
		1	10
	D-F7LF	2	15
		1	15

Mounting Accessories/Refer to p.1-32 for details.

Mounting		Basic	Axial foot	Front flange	Double clevis*
Standard	Mounting nut	●	●	●	—
	Rod end nut	●	●	●	●
	Clevis pin	—	—	—	●
Option	Single knuckle joint	●	●	●	●
	Double knuckle joint*	●	●	●	●
	T bracket	—	—	—	●

* Double clevis or double knuckle joint are packaged with pins and rings.

Mounting Bracket Part No.

Mounting bracket	Bore size (mm)		
	6	**10**	**16**
Foot	CJ-L006B	CJ-L010B	CJ-L016B
Flange	CJ-F006B	CJ-F010B	CJ-F016B
T bracket*	—	CJ-T010B	CJ-T016B

* T bracket is used with double clevis (D)

Auto Switch Mounting Bracket Part No. (Band mounting)

Bore size (mm)	Bracket part No.	Note
6	BJ2-006	Common use to all of D-C7, C8 and D-H7
10	BJ2-010	
16	BJ2-016	

[A set of stainless steel mounting screws]

Note) A set of stainless steel mounting screws "BBA4" is attached. (A switch mounting band is not attached. Please order the band separately.)
"BBA4" screws are used for D-C7/C8/H7.
"D-H7BAL" switch is set on the cylinder with the screws above when shipped.
Also, when a switch only is shipped, "BBA4" screws are attached.

Port Location on Head Cover

Either perpendicular to the cylinder axis or in-line with the cylinder axis is selectable for basic style. (ø6 is available only as in-line style.)

In-line Perpendicular

Weight

(g)

Bore size (mm)		**6**	**10**	**16**
Basic weight*		15	24	55
Additional weight for each 15 of stroke		2	4	6.5
Mounting bracket weight	Axial foot	8	8	20
	Front flange	5	5	15
	Double clevis** (with pins)	—	4	10
Accessory	Single knuckle joint	—	16	22
	Double knuckle joint	—	24	19.5
	T bracket	—	32	50

* This basic weight includes weights of mounting nut and rod end nut.

** The mounting nut is not attached to the double clevis style, so the mounting nut weight is already reduced.

Calculation example: CJ2L10-45
- Basic weight: 24 (ø10)
- Additional weight: 4/15 stroke
- Cylinder stroke: 45 stroke
- Mounting bracket weight: 8 (Axial foot)
- 24+4/15 X 45+8=44g

With Air Cushion

CJ2 | **Mounting** | **Bore size** – **Stroke** | **A** | **Port location on head cover**

• With air cushion

With covers on both sides equipped with the cushion function, the cylinder absorbs the impact during high-speed operation.

Specifications

Action	Double acting/Single rod
Lubrication	Non-lube
Bore size	ø10, ø16
Max. operating pressure	0.7MPa
Min. operating pressure	0.1MPa
Piston speed	50 to 1000mm/s
Mounting	Basic, Axial foot, Front flange, Double clevis

Cushion Mechanism

Bore size (mm)	Effective cushion length (mm)	Allowable kinetic energy (J)
10	9.4	0.07J
16	9.4	0.18J

Clean Series

10-CJ2 | **Mounting** | **Bore size** – **Stroke** | **Port location on head cover**

• Clean series

The rod section of actuator is reinforced with the double-seal structure. The air cylinder can be incorporated in the system which directly discharges the external leak from the clean room through the relief port.

Specifications

Action		Double acting/Single rod
Bore size		ø6, ø10, ø16
Max. operating pressure		0.7MPa
Min. operating pressure	**ø6**	0.14MPa
	ø10, ø16	0.08MPa
Cushion		Rubber bumper (standard)
Standard stroke		Same as the standard
Auto switch		Possible to be mounted
Mounting		Basic, Axial foot, Front flange

Construction

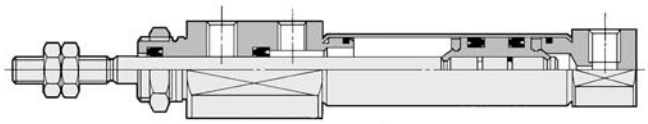

Copper Free

20-CJ2 | **Mounting** | **Bore size** – **Stroke** | **Port location on head cover**

• Copper free

To eliminate influences of copper ions or halogen ions during CRT manufacturing processes, copper and fluorine materials are not used as component parts.

Specifications

Action		Double acting/Single rod
Bore size		ø6, ø10, ø16
Max. operating pressure		0.7MPa
Min. operating pressure	**ø6**	0.12MPa
	ø10, ø16	0.06MPa
Cushion		Rubber bumper (standard)
Standard stroke		Same as the standard
Auto switch		Possible to be mounted
Mounting		Basic, Axial foot, Front flange, Double clevis (Except for ø6)

Construction

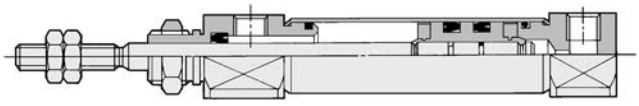

Construction (The cylinder cannot be disassembled.)

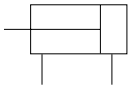

CJ2□6-R

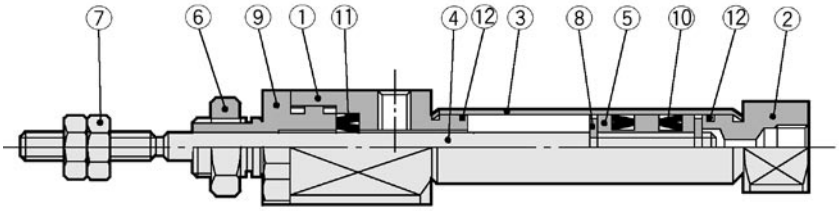

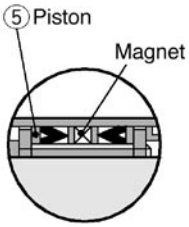

Piston construction in case of auto switches equipped

CJ2□10, CJ2□16

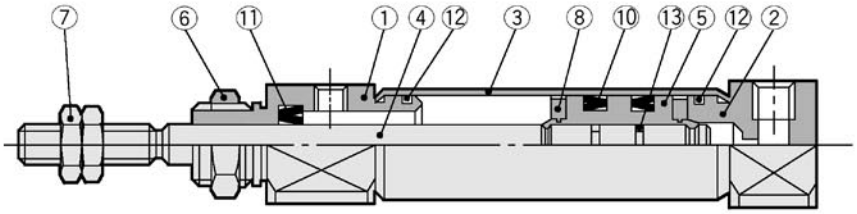

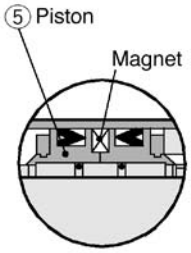

Piston construction in case of auto switches equipped

With air cushion

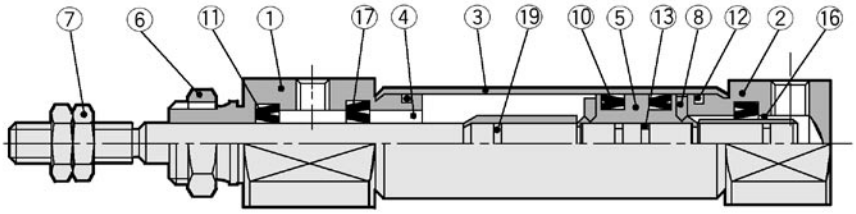

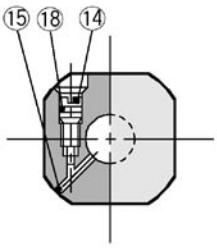

Component Parts

No.	Description	Material	Note
①	Rod cover	Aluminum alloy	White anodized
②	Head cover	Aluminum alloy	White anodized
③	Cylinder tube	Stainless steel	
④	Piston rod	Stainless steel	
⑤	Piston	Brass	
⑥	Mounting nut	Brass	Nickel plated
⑦	Rod end nut	Rolled steel	Nickel plated
⑧	Bumper	Urethane	
⑨*	Packing retainer	Aluminum alloy	White anodized
⑩	Piston seal	NBR	
⑪	Rod packing	NBR	
⑫	Tube gasket	NBR	
⑬	Piston gasket	NBR	

∗ Only for ø6 cylinder

With Air Cushion

No.	Description	Material	Note
⑭	Cushion needle	Stainless steel	
⑮	Steel ball	Bearing steel	
⑯	Cushion ring	Brass	
⑰	Check seal	NBR	
⑱	Needle seal	NBR	
⑲	Cushion ring gasket	NBR	

Basic (B)

CJ2B Bore size – Stroke Port location on head cover

CJ2B6

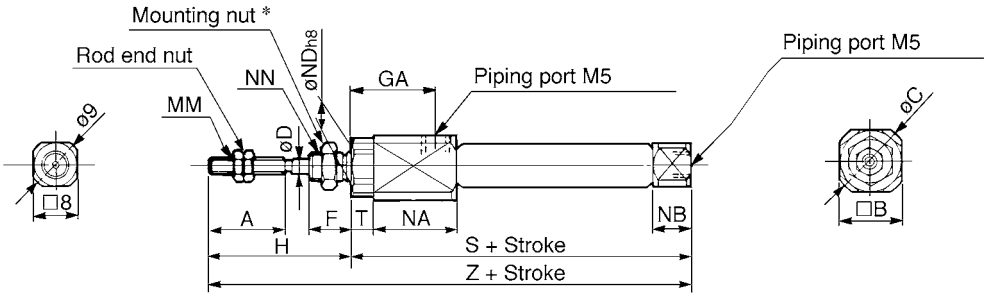

CJ2B10, 16

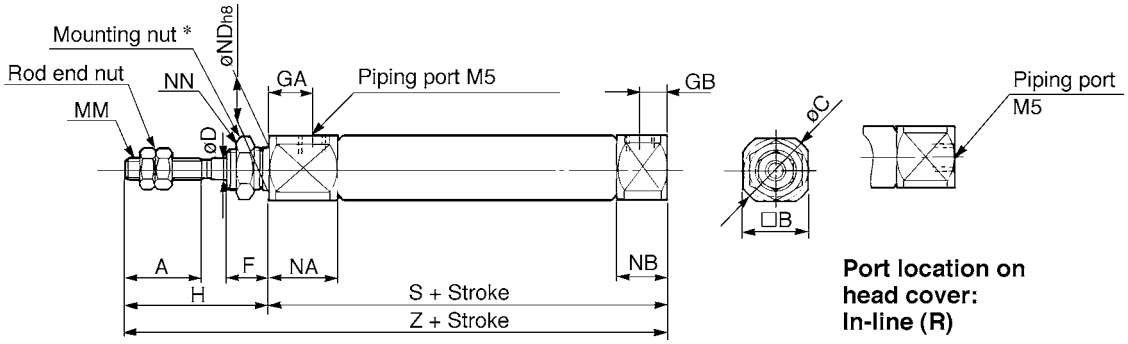

With air cushion: CJ2B Bore size – Stroke **A** Port location on head cover

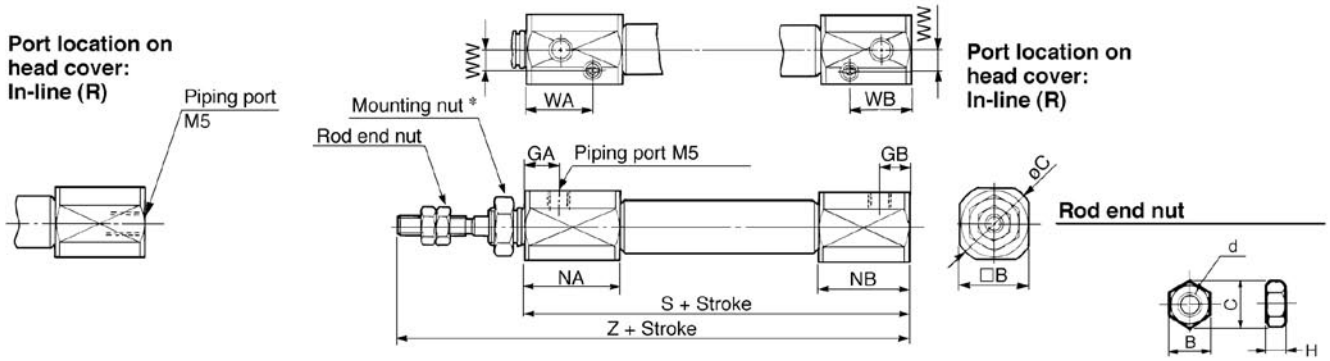

Material: Iron

Part No.	Bore	B	C	d	H
NTJ-006A	6	5.5	6.4	M3	2.4
NTJ-010A	10	7	8.1	M4	3.2
NTJ-015A	16	8	9.2	M5	4

∗ Refer to p.1-32 for details of the mounting nut.

(mm)

Bore	A	B	C	D	F	GA	GB	H	MM	NA	NB	ND_{h8}	NN	S	T	Z
6	15	12	14	3	8	14.5	—	28	M3	16	7	$6^{0}_{-0.018}$	M6 X 1.0	49	3	77
10	15	12	14	4	8	8	5	28	M4	12.5	9.5	$8^{0}_{-0.022}$	M8 X 1.0	46	—	74
16	15	18	20	5	8	8	5	28	M5	12.5	9.5	$10^{0}_{-0.022}$	M10 X 1.0	47	—	75

With air cushion/Dimensions not mentioned in the table below are the same as the above table. (mm)

Bore	B	C	GA	GB	NA	NB	WA	WB	WW	S	Z
10	15	17	7.5	6.5	21	20	14.5	13.5	4.5	65	93
16	18	20	7.5	6.5	21	20	14.5	13.5	5.5	66	94

Axial Foot (L)

CJ2L Bore size – Stroke Port location on head cover

CJ2L6

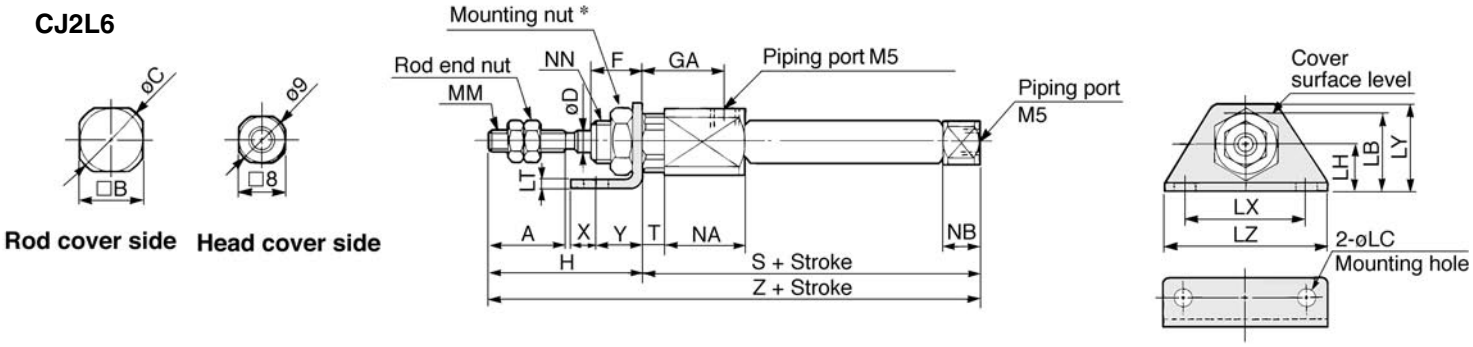

CJ2L10, 16

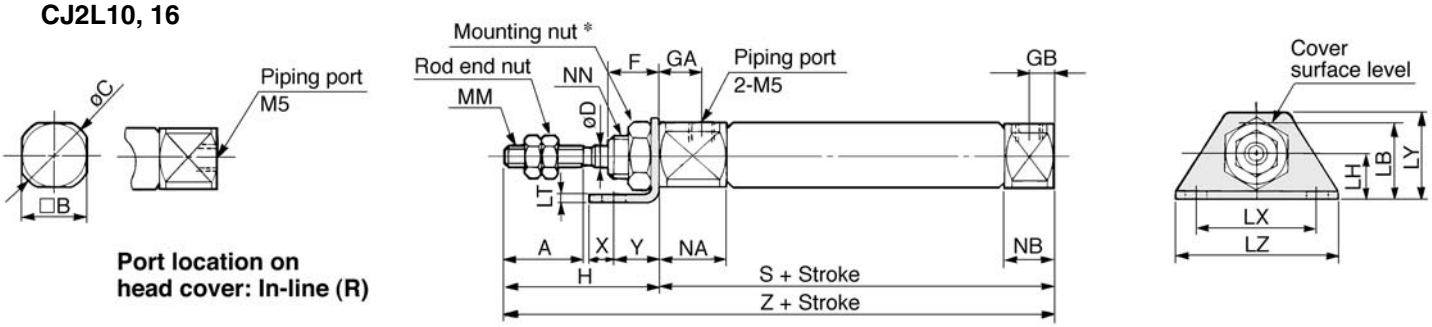

With air cushion: CJ2L Bore size – Stroke **A** Port location on head cover

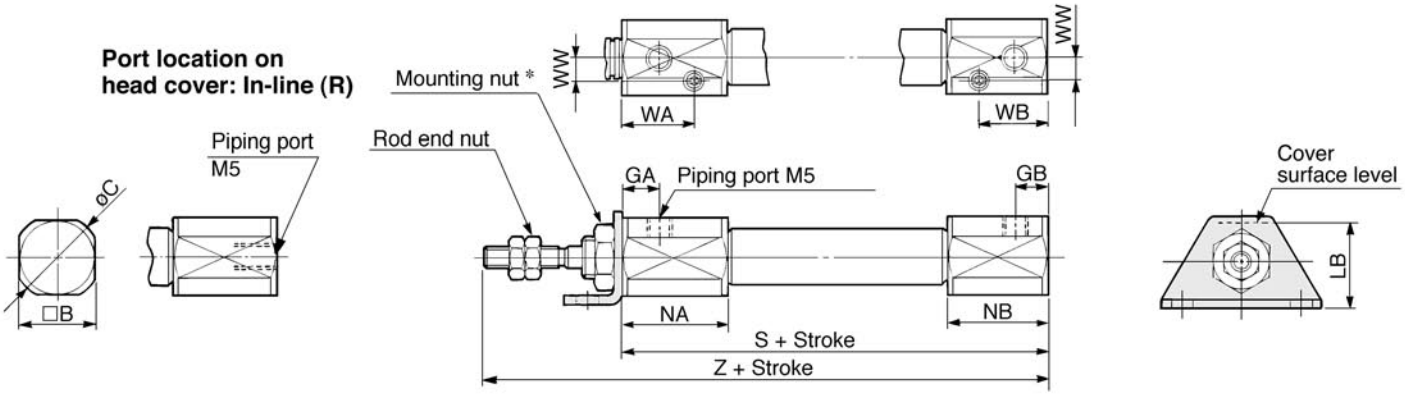

Rod end nut

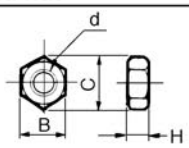

Material: Iron

Part No.	Bore	B	C	d	H
NTJ-006A	6	5.5	6.4	M3	2.4
NTJ-010A	10	7	8.1	M4	3.2
NTJ-015A	16	8	9.2	M5	4

∗ Refer to p.1-32 for details of the mounting nut.

(mm)

Bore	A	B	C	D	F	GA	GB	H	LB	LC	LH	LT	LX	LY	LZ	MM	NA	NB	NN	S	T	X	Y	Z
6	15	12	14	3	8	14.5	—	28	15	4.5	9	1.6	24	16.5	32	M3	16	7	M6 X 1.0	49	3	5	7	77
10	15	12	14	4	8	8	5	28	15	4.5	9	1.6	24	16.5	32	M4	12.5	9.5	M8 X 1.0	46	—	5	7	74
16	15	18	20	5	8	8	5	28	23	5.5	14	2.3	33	25	42	M5	12.5	9.5	M10 X 1.0	47	—	6	9	75

With air cushion/ Dimensions not mentioned in the table below are the same as the above table. (mm)

Bore	B	C	GA	GB	LB	NA	NB	WA	WB	WW	S	Z
10	15	17	7.5	6.5	16.5	21	20	14.5	13.5	4.5	65	93
16	18	20	7.5	6.5	23	21	20	14.5	13.5	5.5	66	94

Front Flange (F)

CJ2F Bore size – Stroke Port location on head cover

CJ2F6

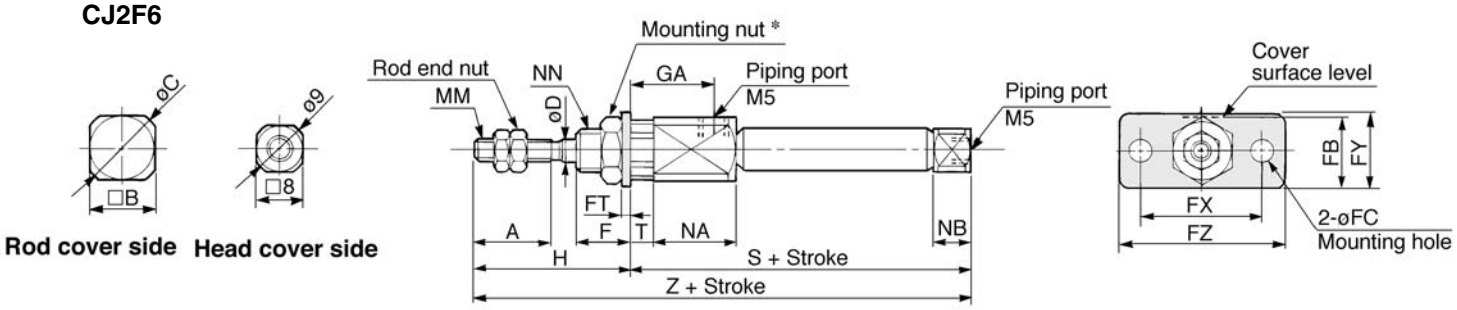

CJ2F10, 16

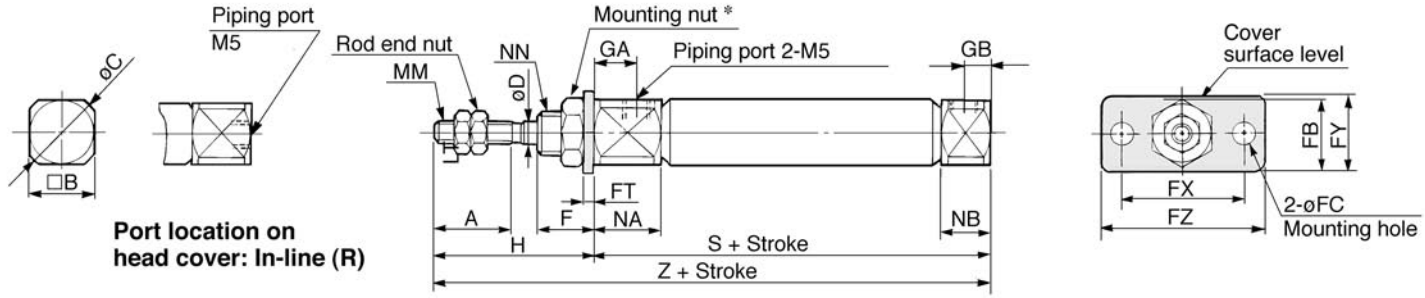

With air cushion: CJ2F Bore size – Stroke **A** Port location on head cover

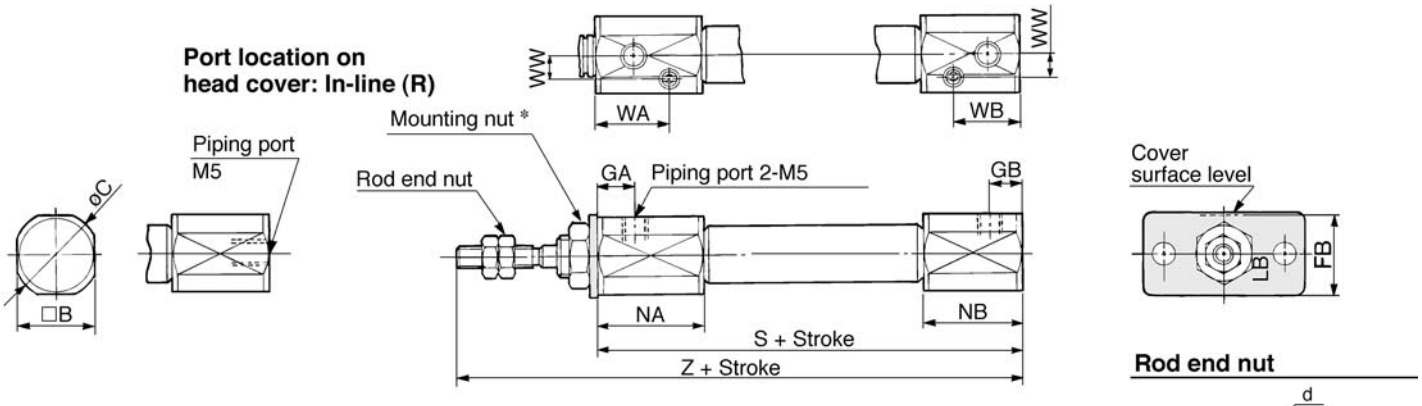

Rod end nut

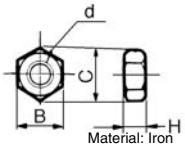

Material: Iron

Part No.	Bore	B	C	d	H
NTJ-006A	6	5.5	6.4	M3	2.4
NTJ-010A	10	7	8.1	M4	3.2
NTJ-015A	16	8	9.2	M5	4

∗ Refer to p.1-32 for details of the mounting nut.

(mm)

Bore	A	B	C	D	F	FB	FC	FT	FX	FY	FZ	GA	GB	H	MM	NA	NB	NN	S	T	Z
6	15	12	14	3	8	13	4.5	1.6	24	14	32	14.5	—	28	M3	16	7	M6 X 1.0	49	3	77
10	15	12	14	4	8	13	4.5	1.6	24	14	32	8	5	28	M4	12.5	9.5	M8 X 1.0	46	—	74
16	15	18	20	5	8	19	5.5	2.3	33	20	42	8	5	28	M5	12.5	9.5	M10 X 1.0	47	—	75

With air cushion/ Dimensions not mentioned in the table below are the same as the above table. (mm)

Bore	B	C	FB	GA	GB	NA	NB	WA	WB	WW	S	Z
10	15	17	14.5	7.5	6.5	21	20	14.5	13.5	4.5	65	93
16	18	20	19	7.5	6.5	21	20	14.5	13.5	5.5	66	94

Double Clevis (D)

CJ2D Bore size – Stroke

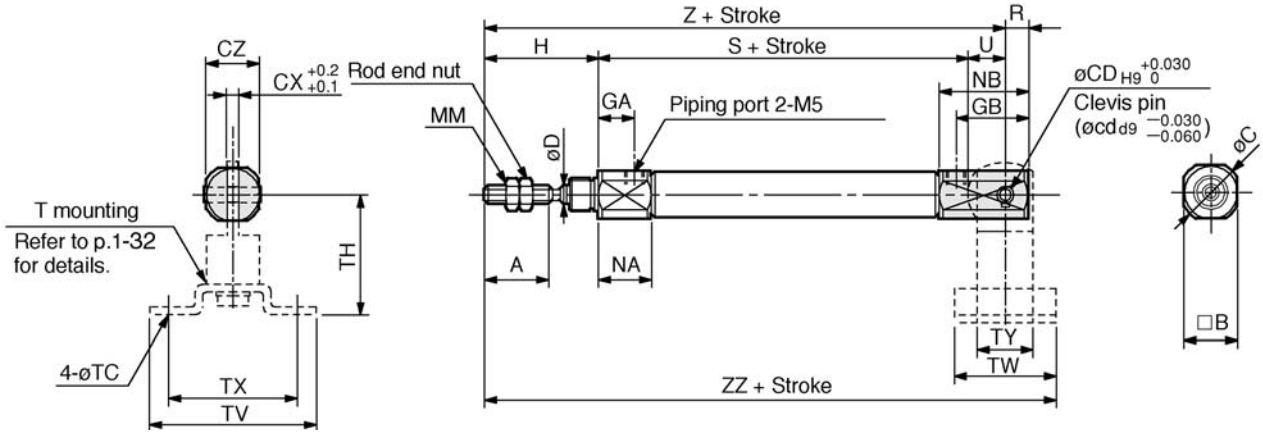

∗ Clavis pins and set rings are attached.

With air cushion: CJ2D Bore size – Stroke A

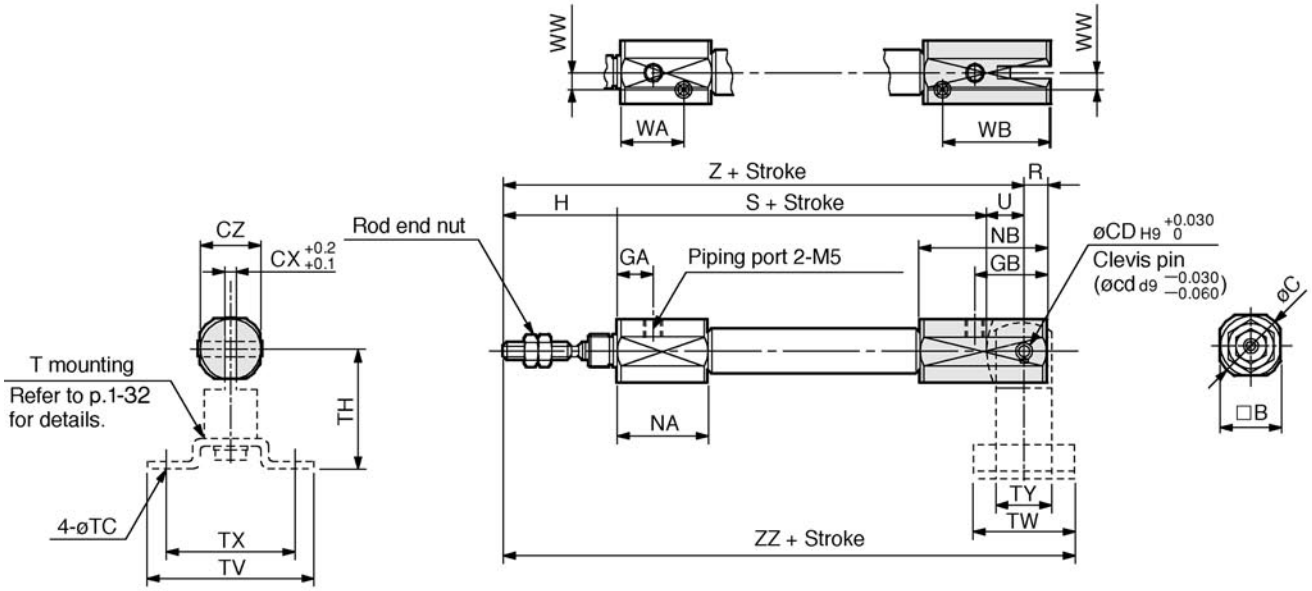

Rod end nut

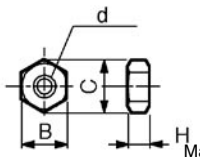

Material: Iron

Part No.	Bore	B	C	d	H
NTJ-010A	10	7	8.1	M4	3.2
NTJ-015A	16	8	9.2	M5	4

∗ Clevis pins and set rings are attached.

(mm)

Bore	A	B	C	CD (cd)	CX	CZ	D	GA	GB	H	MM	NA	NB	R	S	U	Z	ZZ
10	15	12	14	3.3	3.2	12	4	8	18	28	M4	12.5	22.5	5	46	8	82	93
16	15	18	20	5	6.5	18	5	8	23	28	M5	12.5	27.5	8	47	10	85	99

T mounting dimensions

(mm)

Bore	TC	TH	TV	TW	TX	TY
10	4.5	29	40	22	32	12
16	5.5	35	48	28	38	16

With air cushion/Dimensions not mentioned in the table below are the same as the above table.

(mm)

Bore	B	C	CZ	GA	GB	NA	NB	S	WA	WB	WW	Z	ZZ
10	15	17	15	7.5	19.5	21	33	65	14.5	26.5	4.5	101	112
16	18	20	18	7.5	24.5	21	38	66	14.5	31.5	5.5	104	118

Auto Switch Mounting Position

Reed Switch
<Band mounting>

D-C7/C8

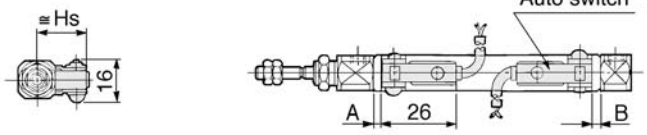

D-C73C/C80C

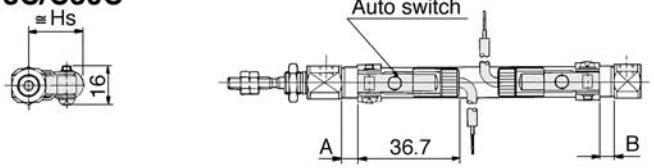

Solid State Switch
<Band mounting>

D-H7□
D-H7□W
D-H7BAL
D-H7□F

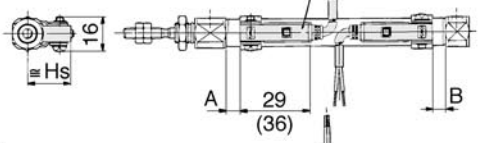

D-H7C

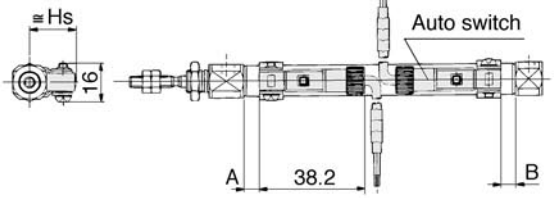

<Rail mounting>

D-A7/A8

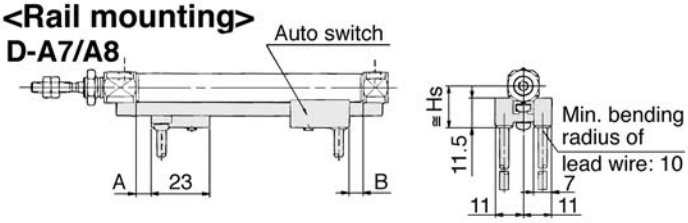

D-A7□H/A80H

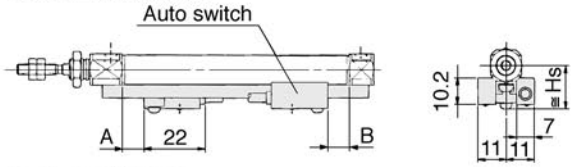

D-A73C/A80C

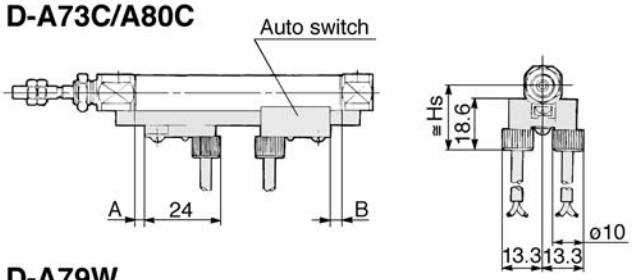

D-A79W

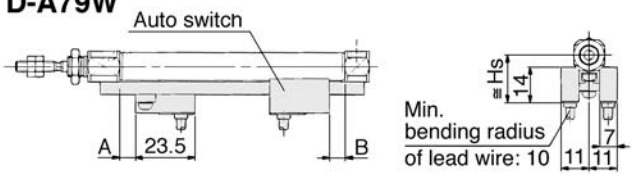

<Rail mounting>

D-F7/J7
D-F7□W/J79W
D-F7□F/F7BAL

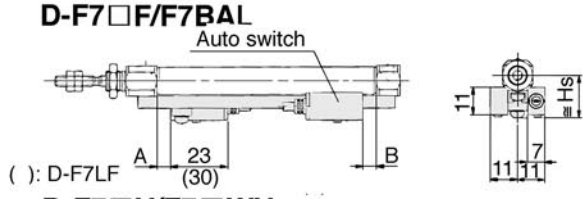

D-F7□V/F7□WV

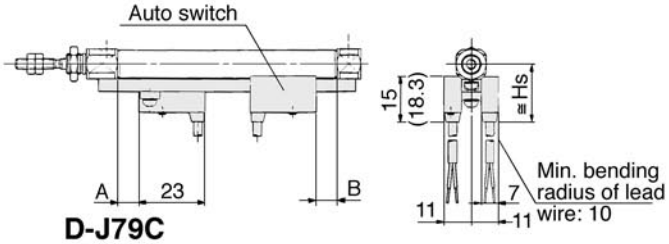

D-J79C

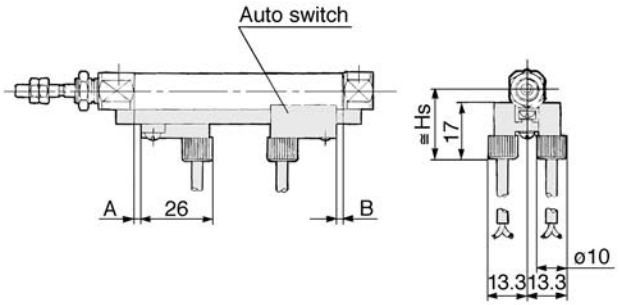

Auto Switch Mounting Position

Auto switch model / Bore	D-C7 D-C8 D-C73C D-C80C		D-H7□ D-H7C		D-H7□W D-H7BAL D-H7□F		D-A7/A8		D-A7□H/A80H D-A73C/A80C D-F7/J7 D-F7□V D-J79C		D-F7BAL D-F7□W D-F7□F D-J79W D-F7□WV		D-A79W	
	A	B	A	B	A	B	A	B	A	B	A	B	A	B
6	2 (8.5)	2 (0.5)	1 (7.5)	1 (0)	—	—	—	—	—	—	—	—	—	—
10	2.5	2.5	1.5	1.5	0	0	3	3	3.5	3.5	7.5	7.5	0.5	0.5
16	3	3	2	2	0.5	0.5	3.5	3.5	4	4	8	8	1	1

Auto Switch Mounting Height

∗ ( ) in the table: In case of double rod style, series CJ2W.

Auto switch model / Bore	D-C7/C8 D-H7□/H7□W D-H7□F D-H7BAL	D-C73C D-C80C	D-H7C	D-A7 D-A8	D-A7□H/A80H D-F7/J7 D-F7□W/J79W D-F7BAL/F7□F	D-A73C D-A80C	D-F7□V D-F7□WV	D-J79C	D-A79W
	Hs	Hs	Hs	Hs	Hs	Hs	Hs	Hs	Hs
6	15	17.5	18	—	—	—	—	—	—
10	17	19.5	20	16.5	17.5	23.5	20	23	19
16	20.5	23	23.5	19.5	20.5	26.5	23	26	22

Accessory Dimensions

(mm)

Single knuckle joint

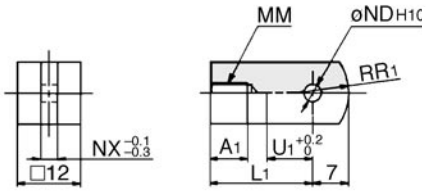

Material: Rolled steel

Part No.	Bore	A_1	L_1	MM	ND^{H10}	NX	R_1	U_1
I-J010B	**10**	8	21	M4	3.3 +0.048 0	3.1	8	9
I-J016B	**16**	8	25	M5	5 +0.048 0	6.4	12	14

Clevis pin

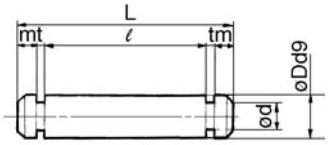

Material: Stainless steel

Part No.	Bore	Dd9	d	L	ℓ	m	t	Set ring
CD-J010	**10**	3.3 −0.030 −0.060	3	15.2	12.2	1.2	0.3	C 3.2
CD-Z015	**16**	5 −0.030 −0.060	4.8	22.7	18.3	1.5	0.7	C 5
CD-JA010*	**10**	3.3 −0.030 −0.060	3	18.2	15.2	1.2	0.3	C 3.2

∗ For ø10 double clevis style, with air cushion and built-in speed controller

Knuckle pin

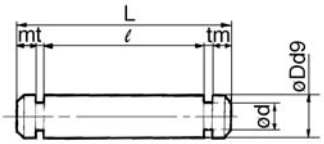

Material: Stainless steel

Part No.	Bore	Dd9	d	L	ℓ	m	t	Set ring
IY-J010	**10**	3.3 −0.030 −0.060	3	16.2	12.2	1.7	0.3	C 3.2
IY-J015	**16**	5 −0.030 −0.060	4.8	16.6	12.2	1.5	0.7	C 5

Double knuckle

∗ Knuckle pins and set rings are attached.

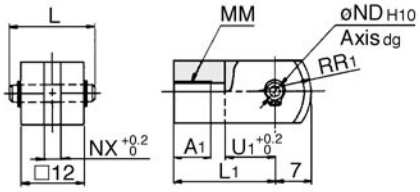

Material: Rolled steel

Part No.	Bore	A_1	L	L_1	MM
Y-J010B	10	8	16.2	21	M4
Y-J016B	16	11	16.6	21	M5

Part No.	ND_{d9}	ND_{H10}	NX	R_1	U_1
Y-J010B	3.3 −0.030 −0.060	3.3 +0.048 0	3.2	8	10
Y-J016B	5 −0.030 −0.060	5 +0.048 0	6.5	12	10

Mounting nut

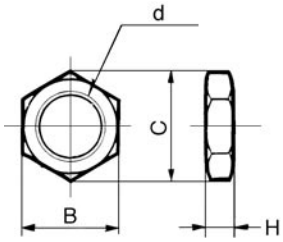

Material: Brass

Part No.	Bore	B	C	d	H
SNJ-006B	**6**	8	9.2	M6 X 1.0	4
SNJ-010B	**10**	11	12.7	M8 X 1.0	4
SNJ-016B	**16**	14	16.2	M10 X 1.0	4
SNKJ-016B*	**16**	17	19.6	M12 X 1.0	4

∗ For ø16 non-rotating style.
(Use SNJ-016B for ø10 non-rotating style.)

Rod end nut

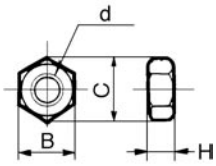

Material: Iron

Part No.	Bore	B	C	d	H
NTJ-006A	**6**	5.5	6.4	M3	2.4
NTJ-010A	**10**	7	8.1	M4	3.2
NTJ-015A	**16**	8	9.2	M5	4

T bracket

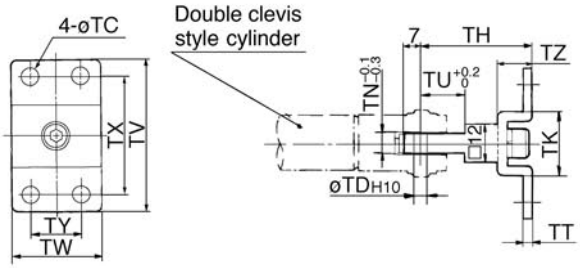

Part No.	Bore	TC	TD_{H10}	TH	TK	TN	TT	TU	TV	TW	TX	TY	TZ
CJ-T010B	**10**	4.5	3.3 +0.048 0	29	18	3.1	2	9	40	22	32	12	8
CJ-T016B	**16**	5.5	5 +0.048 0	35	20	6.4	2.3	14	48	28	38	16	10

Rod end cap

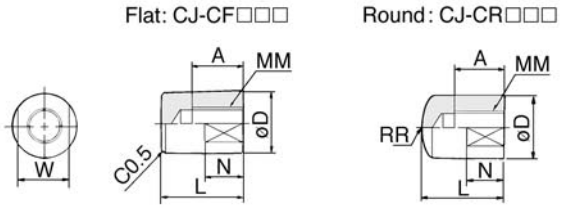

Material: Iron

Part No. Flat	Part No. Round	Bore	A	D	L	MM	N	R	W
CJ-CF006	**CJ-CR006**	6	6	8	11	M3	5	8	6
CJ-CF010	**CJ-CR010**	10	8	10	13	M4	6	10	8
CJ-CF016	**CJ-CR016**	16	10	12	15	M5	7	12	10

Standard: Double Acting Double Rod

Series CJ2W

ø6, ø10, ø16

How to Order

Bore size

6	6mm
10	10mm
16	16mm

Standard stroke

ø6, ø10, ø16	15, 30, 45, 60

Mounting

B	Basic
L	Axial foot
F	Front flange

Cushion

—	Rubber bumper
A	Air cushion (Except for ø6)

Standard CJ2W L 16 — 45 A

With auto switch CDJ2W L 16 — 45 A — C73 ☐

With auto switch
(built-in magnet)

Auto switch
∗ Refer to the table below for selecting applicable auto switches.

∗ If requiring a built-in magnet cylinder without an auto switch, refer to the model number example below.

Number of switches

—	2
S	1
n	n

Applicable Auto Switches

Style	Special function	Electrical entry	Indicator	Wiring (Output)	Load voltage DC		Load voltage AC	Auto switch model** Band (ø6, ø10, ø16)	Rail (ø10, ø16) Perp.	Rail (ø10, ø16) In-line	Lead wire* 0.5 (—)	3 (L)	5 (Z)	None (N)	Applicable load	
Reed switch	—	Grommet	Yes	3 wire (NPN)	—	5V	—	**C76**	—	**A76H**	●	●	—	—	IC	—
				2 wire	—	—	200V	—	**A72**	**A72H**	●	●	—	—	—	Relay PLC
					24V	12V	100V	**C73**	**A73**	**A73H**	●	●	●	—		
			No			5V, 12V	≤100V	**C80**	**A80**	**A80H**	●	●	—	—	IC	
		Connector	Yes			12V	—	**C73C**	**A73C**	—	●	●	●	●	—	
			No			5V, 12V	≤24V	**C80C**	**A80C**	—	●	●	●	●	IC	
	Diagnostic indication (2 colour)	Grommet	Yes			—	—	—	**A79W**	—	●	●	—	—	—	
Solid state switch	—	Grommet	Yes	3 wire (NPN)	24V	5V, 12V	—	**H7A1**	**F7NV**	**F79**	●	●	○	—	IC	Relay PLC
				3 wire (PNP)				**H7A2**	**F7PV**	**F7P**	●	●	○	—		
				2 wire		12V	—	**H7B**	**F7BV**	**J79**	●	●	○	—	—	
		Connector					—	**H7C**	**J79C**	—	●	●	●	●		
	Diagnostic indication (2 colour)	Grommet		3 wire (NPN)		5V, 12V	—	**H7NW**	**F7NWV**	**F79W**	●	●	○	—	IC	
				3 wire (PNP)				**H7PW**	—	**F7PW**	●	●	○	—		
				2 wire		12V		**H7BW**	**F7BWV**	**J79W**	●	●	○	—	—	
	Water resistant (2 colour)							**H7BA**	—	**F7BA**	—	●	○	—		
	With timer			3 wire (NPN)		5V, 12V		—	—	**F7NT**	—	●	○	—	IC	
	With diagnostic output (2 colour)			4 wire (NPN)				**H7NF**	—	**F79F**	●	●	○	—		
	Latch with diagnostic output (2 colour)					—		**H7LF**	—	**F7LF**	●	●	○	—	—	

∗ Lead wire length 0.5m·····— e.g.) C73C 5m·····Z e.g.) C73CZ
3m·····L C73CL None·····N C73CN

∗ Solid state switches marked with" ○ " are manufactured upon receipt of order.

∗∗ "D-A79W"cannot be mounted on bore size ø10 cylinder with air cushion.

∗∗ "D-H7□W", "D-H7BA" and "D-H7□F" cannot be mounted on bore size ø6 cylinder.

Part No. of Cylinder with Built-in Magnet

Symbol "-A" (rail mounting) or "-B" (band mounting) should be suffixed to the part No. of the cylinder with auto switch.

Ex.	Rail mounting	CDJ2WB16-60-A
	Band mounting	CDJ2WB10-45-B

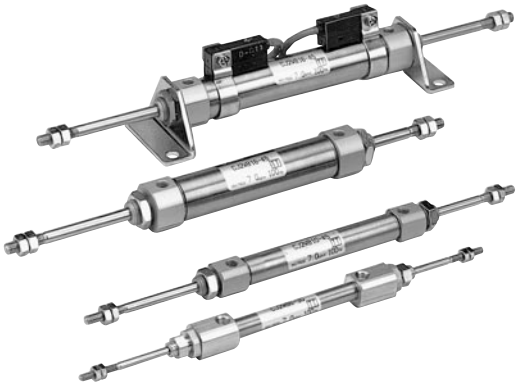

Specifications

Action		Double acting/Double rod
Fluid		Air
Proof pressure		1.05MPa
Max. operating pressure		0.7MPa
Min. operating pressure	ø6	0.15MPa
	ø10, ø16	0.1MPa
Ambient and fluid temperature		Without auto switch: −10°C to 70°C, With auto switch: −10°C to 60°C*
Cushion		Rubber bumper/Air cushion
Lubrication		Non-lube
Thread tolerance		JIS class 2
Stroke tolerance		$^{+1.0}_{0}$
Piston speed		50 to 750mm/s
Allowable kinetic energy	ø6	0.012J
	ø10	0.035J
	ø16	0.090J

∗ No freezing

JIS Symbol

Double acting/Double rod

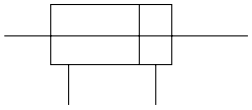

Standard Stroke

(mm)

Bore size	Standard stroke
6, 10, 16	15, 30, 45, 60

⚠ Caution

Mounting

① During installation, secure the rod cover and tighten by applying an appropriate tightening force to the retaining nut or to the rod cover body. If the head cover is secured or the head cover body is tightened, the cover could rotate, leading to a deviation.

② Tighten the retaining screws to an appropriate tightening torque within the range given below.
ø6: 2.1 to 2.5Nm, ø10: 5.9 to 6.4Nm, ø16: 10.8 to 11.8Nm

③ To remove and install the snap ring for the knuckle pin or the clevis pin, use an appropriate pair of pliers (tool for installing a C type snap ring). In particular, use a pair of ultra-mini pliers such as the Super Tool CSM-07A for removing and installing the snap rings on the ø10 cylinder.

④ In the case of auto switch rail mounting, do not remove the rail that is mounted. Because the retaining screws extend into the cylinder, this could lead to an air leak.

Minimum Strokes for Auto Switch Mounting

Mounting	Auto switch model	Number of switches	Min. stroke (mm)
Band mounting (ø6, ø10, ø16)	D-C7 D-C8	2 (same surface)	50
		2(different surfaces)	15
		1	10
	D-H7□ D-H7□W (1) D-H7BAL (1) D-H7NF (1)	2 (same surface)	60
		2 (different surfaces)	15
		1	10
	D-C73C D-C80C D-H7C	2(same surface)	65
		2(different surfaces)	15
		1	10
	D-H7LF (1)	2(same surface)	65
		2 (different surfaces)	25
		1	15
Rail mounting (ø10, ø16)	D-A7/A8 D-A7□H/A80H D-A73C/A80C	2	10
		1	5
	D-F7 D-J79 D-F7□V D-J79C	2	5
		1	5
	D-A79W D-F7□W D-J79W D-F7BAL D-F7□WV D-F79F	2	15
		1	10
	D-F7LF	2	15
		1	15

Note 1) Cannot be mounted on ø6 cylinder.

Mounting Accessories/Refer to p.1-32 details.

Mounting		Basic	Foot	Flange
Standard	Mounting nut	●	●	●
	Rod end nut	●	●	●
Option	Single knuckle joint	●	●	●
	Double knuckle joint*	●	●	●

* Double clevis or double knuckle joint is packaged with knuckle pins and set rings.

Mounting Bracket Part No.

Mounting bracket	Bore size (mm)		
	6	**10**	**16**
Foot	CJ-L006B	CJ-L010B	CJ-L016B
Flange	CJ-F006B	CJ-F010B	CJ-F016B

Auto Switch Mounting Bracket Part No. (Band mounting)

Bore size (mm)	Bracket part No.	Note
6	BJ2-006	Common use to all of D-C7, C8 and D-H7
10	BJ2-010	
16	BJ2-016	

Note) A set of stainless steel mounting screws "BBA4" is attached. (A switch mounting band is not attached. Please order the band separately.)
"BBA4" screws are used for D-C7/C8/H7.
"D-H7BAL" switch is set on the cylinder with the screws above when shipped.
Also, when a switch only is shipped, "BBA4" screws are attached.

Weight

(g)

Bore size (mm)		**6**	**10**	**16**
Basic weight*		27	35	70
Additional weight for each 15 of stroke		3	6	9
Mounting bracket weight	Foot	16	16	40
	Flange	5	5	15

* This basic weight includes weights of mounting nut and rod end nut.

Calculation example)

CJ2WL10-45

- Basic weight: 35 (ø10)
- Additional weight: 6/15 stroke
- Cylinder stroke: 45 stroke
- Mounting bracket weight: 16 (Foot)
  35+6/15 X 45+16=69g
- Refer to p.1-24 for weight of the accessory.

With Air Cushion

CJ2W | **Mounting** | **Bore size** – **Stroke** | **A**

With air cushion ●

With covers on both sides equipped with the cushion function, the cylinder absorbs the impact during high-speed operation.

Specifications

Action	Double acting/Double rod
Lubrication	Non-lube
Bore size (mm)	ø10, ø16
Max. operating pressure	0.7MPa
Min. operating pressure	0.1MPa
Piston speed	50 to 1000mm/s
Mounting	Basic, Foot, Flange

Cushion Mechanism

Bore size mm	Effective cushion length (mm)	Allowable kinetic energy (J)
10	9.4	0.07J
16	9.4	0.18J

Copper Free

20-CJ2W | **Mounting** | **Bore size** – **Stroke**

● Copper free

To eliminate influences of copper ions or halogen ions during CRT manufacturing processes, copper and fluorine materials are not used as component parts.

Specifications

Action		Double acting/Double rod
Bore size (mm)		ø6, ø10, ø16
Max. operating pressure		0.7MPa
Min. operating pressure	**ø6**	0.15MPa
	ø10, ø16	0.1MPa
Cushion		Rubber
Standard stroke (mm)		15, 30, 45, 60mm
Auto switch		Possible to be mounted
Mounting		Basic, Foot , Flange

Clean Series

10-CJ2W | **Mounting** | **Bore size** – **Stroke**

• **Clean series**

The rod section of actuator is reinforced with the double-seal structure. The air cylinder can be incorporated in the system which directly discharges the external leak from the clean room through the relief port.

Specifications

Action	Double acting/Double rod
Bore size	ø10, ø16
Max. operating pressure	0.7MPa
Min. operating pressure	0.1MPa
Cushion	Rubber bumper
Standard stroke	Same as the standard (Refer to p.1-23)
Auto switch	Possible to be mounted
Mounting	Basic, Axial foot, Front flange

Construction

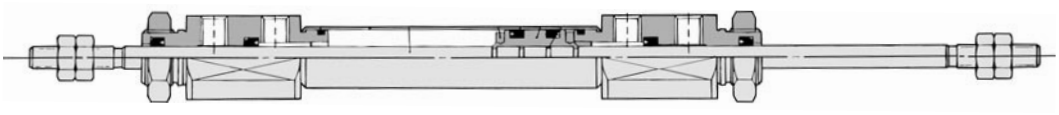

Construction (The cylinder cannot be disassembled.)

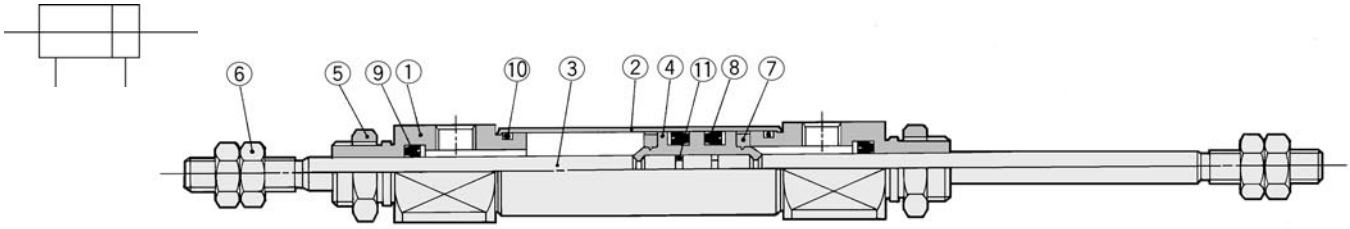

With air cushion

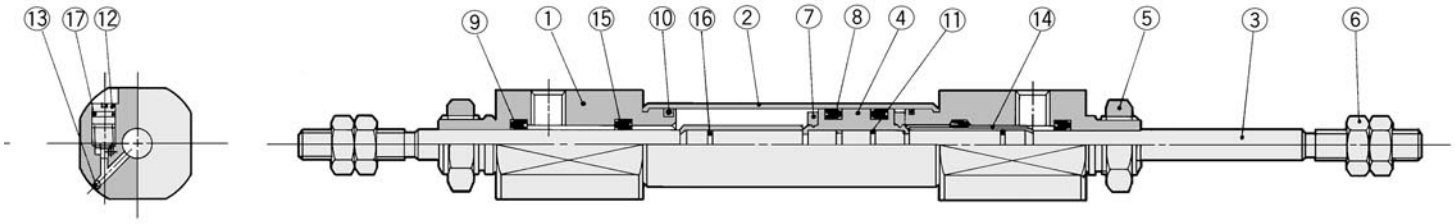

Component Parts

No.	Description	Material	Note
①	Rod cover	Aluminum alloy	White anodized
②	Cylinder tube	Stainless steel	
③	Piston rod	Stainless steel	
④	Piston	Brass	
⑤	Mounting nut	Brass	Nickel plated
⑥	Rod end nut	Rolled steel	Nickel plated
⑦	Bumper	Urethane	
⑧	Piston seal	NBR	
⑨	Rod seal	NBR	
⑩	Tube gasket	NBR	
⑪	Piston gasket	NBR	

For Air Cushion Style

No.	Description	Material	Note
⑫	Cushion needle	Stainless steel	
⑬	Steel ball	Bearing steel	
⑭	Cushion ring	Brass	
⑮	Check seal	NBR	
⑯	Cushion ring gasket	NBR	
⑰	Needle seal	NBR	

Basic (B)

CJ2WB Bore size – Stroke

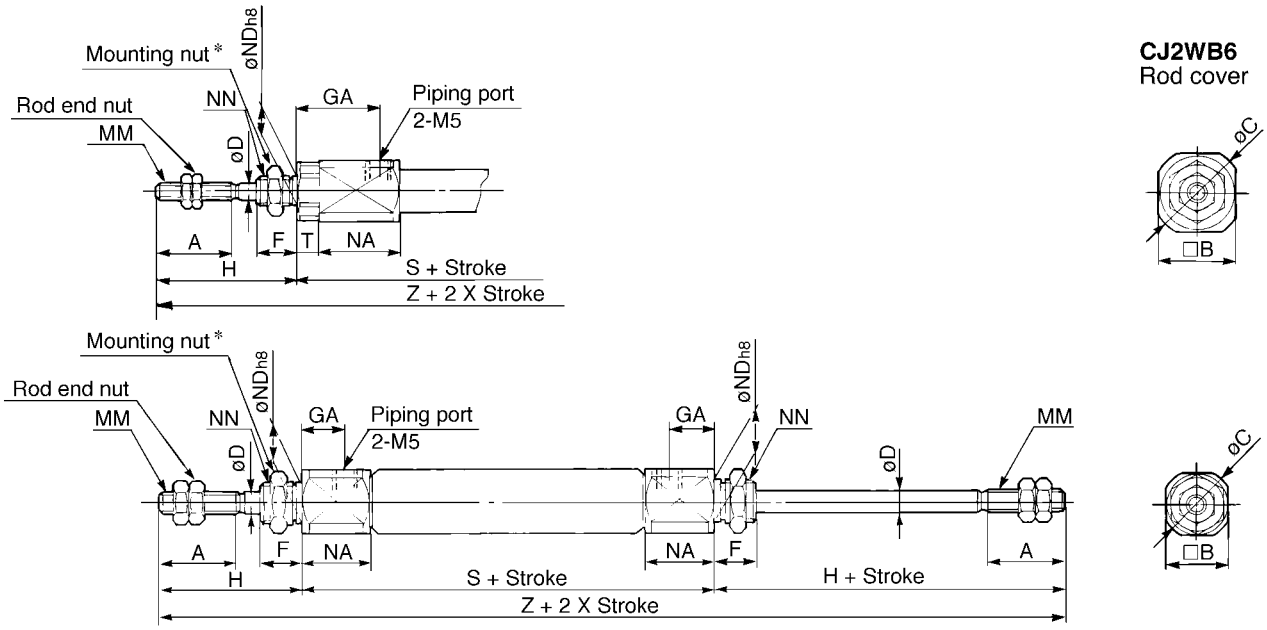

With air cushion: CJ2WB Bore size – Stroke A

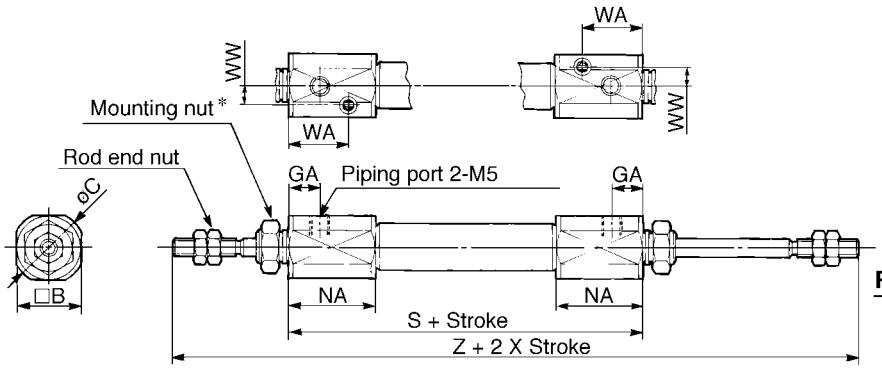

Rod end nut

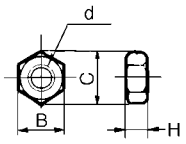

Material: Iron

Part No.	Bore size	B	C	d	H
NTJ-006A	6	5.5	6.4	M3	2.4
NTJ-010A	10	7	8.1	M4	3.2
NTJ-015A	16	8	9.2	M5	4

∗ Refer to p.1-32 for details of the mounting nut.

(mm)

Bore	A	B	C	D	F	GA	H	MM	NA	ND h8	NN	S*	T	Z*
6	15	12	14	3	8	14.5	28	M3	16	$6^{0}_{-0.018}$	M6 X 1.0	61 (66)	3	117 (122)
10	15	12	14	4	8	8	28	M4	12.5	$8^{0}_{-0.022}$	M8 X 1.0	49	—	105
16	15	18	20	5	8	8	28	M5	12.5	$10^{0}_{-0.022}$	M10 X 1.0	50	—	106

∗ ( ) in S or Z dimensions: With auto switch

With air cushion/Dimensions not mentioned in the table below are the same as the above table.

Bore	B	C	GA	NA	WA	WW	S	Z
10	15	17	7.5	21	14.5	4.5	66	122
16	18	20	7.5	21	14.5	5.5	67	123

Foot (L)

CJ2WL Bore size – Stroke

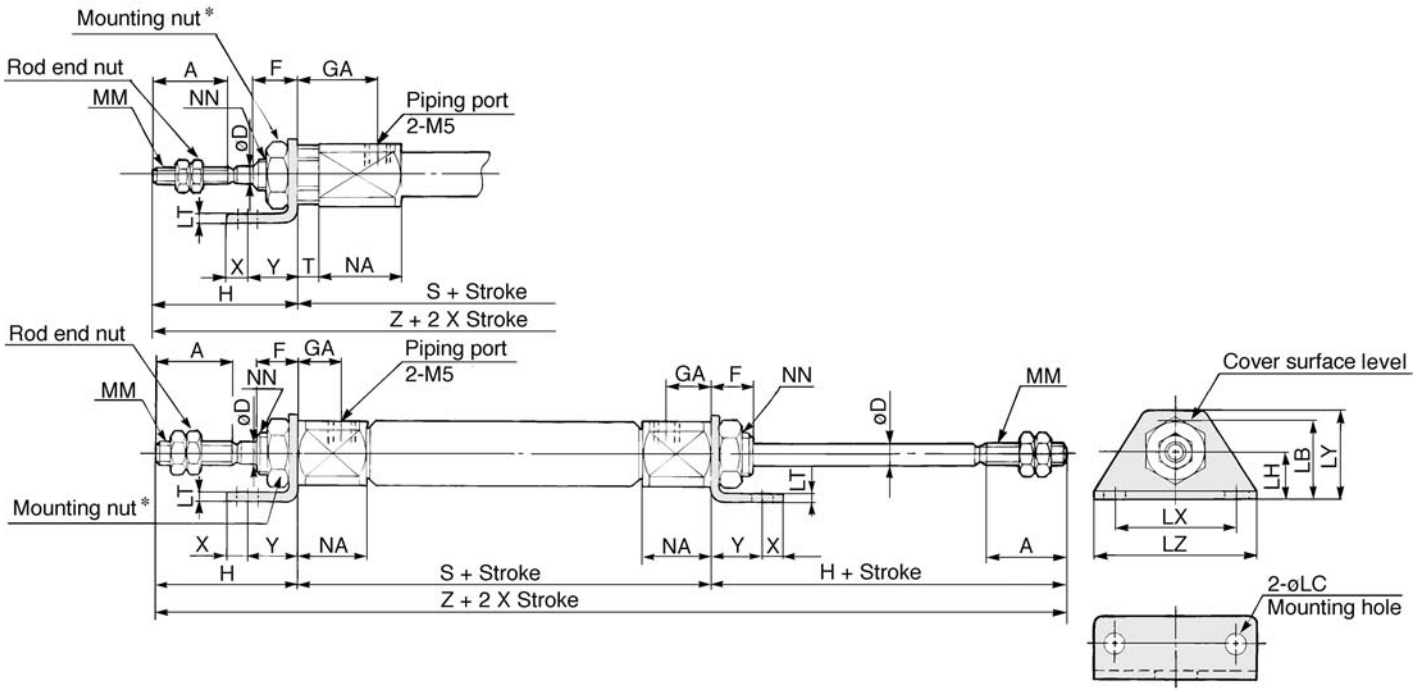

With air cushion: CJ2WL Bore size – Stroke **A**

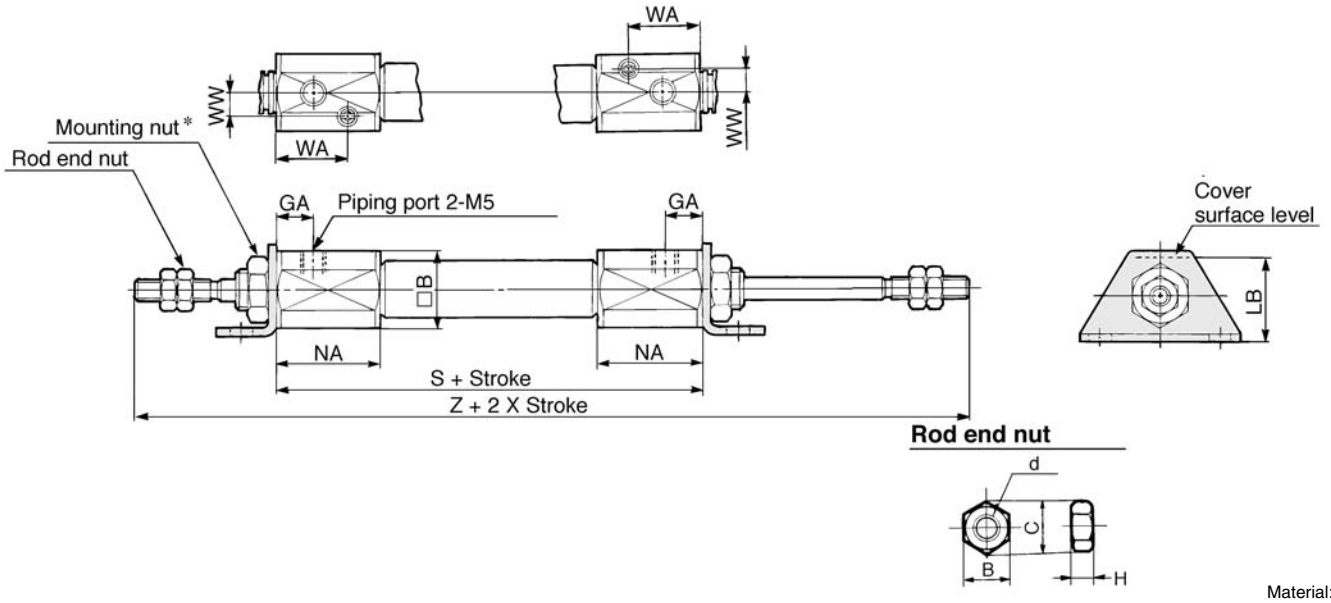

Material: Iron

Part No.	Bore	B	C	d	H
NTJ-006A	6	5.5	6.4	M3	2.4
NTJ-010A	10	7	8.1	M4	3.2
NTJ-015A	16	8	9.2	M5	4

∗ Refer to p.1-32 for details of the mounting nut.

(mm)

Bore	A	D	F	GA	H	LB	LC	LH	LT	LX	LY	LZ	MM	NA	NN	S*	T	X	Y	Z*
6	15	3	8	14.5	28	15	4.5	9	1.6	24	16.5	32	M3	16	M6 X 1.0	61 (66)	3	5	7	117 (122)
10	15	4	8	8	28	15	4.5	9	1.6	24	16.5	32	M4	12.5	M8 X 1.0	49	—	5	7	105
16	15	5	8	8	28	23	5.5	14	2.3	33	25	42	M5	12.5	M10 X 1.0	50	—	6	9	106

∗ ( ) in S or Z dimensions: With auto switch

With air cushion / Dimensions not mentioned in the table below are the same as the above table.

Bore	B	GA	LB	NA	WA	WW	S	Z
10	15	7.5	16.5	21	14.5	4.5	66	122
16	18	7.5	23	21	14.5	5.5	67	123

Flange (F)

CJ2WF Bore size – Stroke

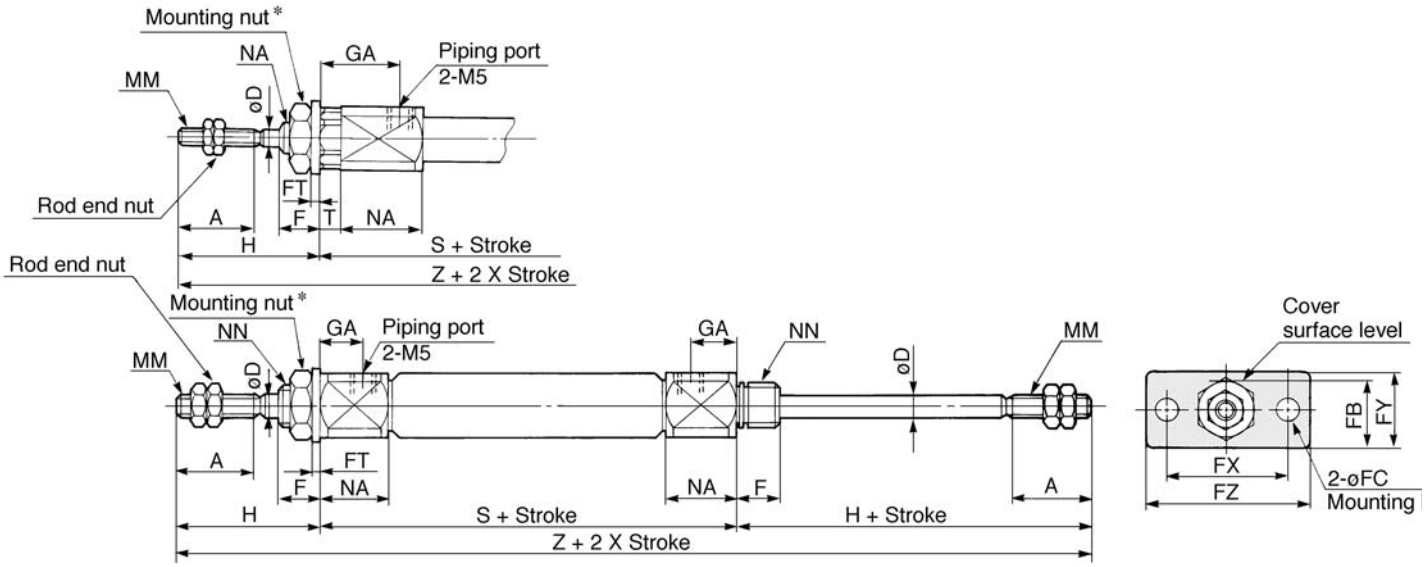

With air cushion: CJ2WF Bore size – Stroke **A**

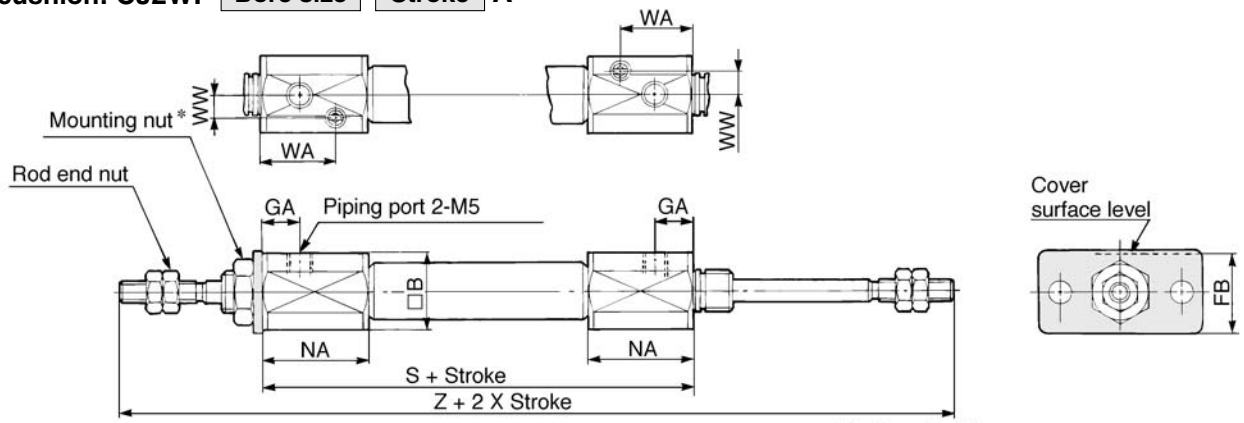

Rod end nut

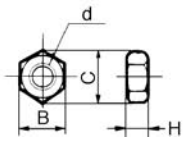

Material: Iron

Part No.	Bore	B	C	d	H
NTJ-006A	6	5.5	6.4	M3	2.4
NTJ-010A	10	7	8.1	M4	3.2
NTJ-015A	16	8	9.2	M5	4

∗ Refer to p.1-32 for details of the mounting nut.

(mm)

Bore	A	D	F	FB	FC	FT	FX	FY	FZ	GA	H	MM	NA	NN	S*	T	Z*
6	15	3	8	13	4.5	1.6	24	14	32	14.5	28	M3	16	M6 X 1.0	61 (66)	3	117 (122)
10	15	4	8	13	4.5	1.6	24	14	32	8	28	M4	12.5	M8 X 1.0	49	—	105
16	15	5	8	19	5.5	2.3	33	20	42	8	28	M5	12.5	M10 X 1.0	50	—	106

∗ ( ) in S or Z dimensions: With auto switch

With air cushion / Dimensions not mentioned in the table below are the same as the above table.

Bore	B	FB	GA	NA	WA	WW	S	Z
10	15	14.5	7.5	21	14.5	4.5	66	122
16	18	19	7.5	21	14.5	5.5	67	123

Standard: Single Acting Spring Return/Extend

Series CJ2

ø6, ø10, ø16

How to Order

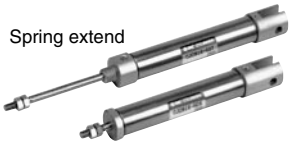

Spring extend

Spring return

Bore size

6	6mm
10	10mm
16	16mm

Mounting

B	Basic
L	Axial foot
F	Front flange
D	Double clevis (Except for ø6)

Standard stroke

ø6	15, 30, 45, 60
ø10	15, 30, 45, 60
ø16	15, 30, 45, 60, 75, 100, 125, 150

Action

S	Single acting/Spring return
T	Single acting/Spring extend

Standard CJ2 L 16 — 45 S R

With auto switch CDJ2 L 16 — 45 S R — C73 ☐

With auto switch
Built-in magnet

Port location on head cover

Symbol \ Bore	ø6	ø10, ø16
—	—	Perpendicular
R	In-line	In-line

∗ Refer to p.1-24 for the configuration.
∗ Not applicable to single acting/spring extend style (T).

Auto switch

∗ Refer to the table below for selecting applicable auto switches.

∗ If requiring a built-in-magnet cylinder without an auto switch, refer to the model number example below.

Number of switches

—	2
S	1
n	n

Applicable Auto Switches

Style	Special function	Electrical entry	Indicator	Wiring (Output)	Load voltage DC		Load voltage AC	Auto switch model: Band (ø6, ø10, ø16)	Rail (ø10, ø16) Perp.	Rail (ø10, ø16) In-line	Lead wire∗ 0.5 (—)	3 (L)	5 (Z)	None (N)	Applicable load	
Reed switch	—	Grommet	Yes	3 wire (NPN)	—	5V	—	C76	—	A76H	●	●	—	—	IC	—
				2 wire	—	—	200V	—	A72	A72H	●	●	—	—	—	Relay PLC
					24V	12V	100V	C73	A73	A73H	●	●	●	—		
			No			5V, 12V	≤100V	C80	A80	A80H	●	●	—	—	IC	
		Connector	Yes			12V	—	C73C	A73C	—	●	●	●	●	—	
			No			5V, 12V	≤24V	C80C	A80C	—	●	●	●	●	IC	
	Diagnostic indication (2 colour)	Grommet	Yes			—	—	—	A79W	—	●	●	—	—	—	
Solid state switch	—	Grommet	Yes	3 wire (NPN)	24V	5V, 12V	—	H7A1	F7NV	F79	●	●	○	—	IC	Relay PLC
				3 wire (PNP)				H7A2	F7PV	F7P	●	●	○	—		
				2 wire		12V	—	H7B	F7BV	J79	●	●	○	—	—	
		Connector					—	H7C	J79C	—	●	●	●	●		
	Diagnostic indication (2 colour)	Grommet		3 wire (NPN)		5V, 12V	—	H7NW	F7NWV	F79W	●	●	○	—	IC	
				3 wire (PNP)				H7PW	—	F7PW	●	●	○	—		
				2 wire		12V		H7BW	F7BWV	J79W	●	●	○	—	—	
	Water resistant (2 colour)							H7BA	—	F7BA	—	●	○	—		
	With timer			3 wire (NPN)		5V, 12V		—	—	F7NT	—	●	○	—	IC	
	With diagnostic output (2 colour)			4 wire (NPN)				H7NF	—	F79F	●	●	○	—		
	Latch with diagnostic output (2 colour)					—		H7LF	—	F7LF	●	●	○	—	—	

∗ Lead wire length 0.5m·····— e.g.) C73C 5m·····Z e.g.) C73CZ
3m·····L C73CL None·····N C73CN

∗ Solid state switches marked with" ○ " are manufactured upon receipt of order.

Part No.of Cylinder with Built-in Magnet

Symbol "-A" (rail mounting) or "-B" (band mounting) should be suffixed to the part No. of the cylinder with auto switch.

Ex.	Rail mounting	CDJ2B16-60S-A
	Band mounting	CDJ2B10-45S-B

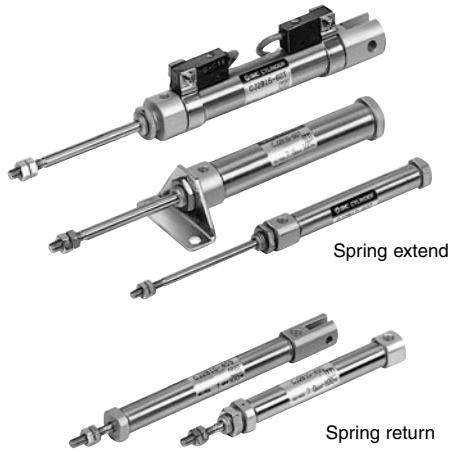

JIS symbol

Single acting/ Spring return

Single acting/ Spring extend

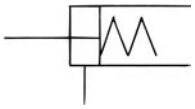

Specifications

Action		Single acting/Spring return	Single acting/Spring extend
Fluid		Air	
Proof pressure		1.05MPa	
Max. operating pressure		0.7MPa	
Min. operating pressure	ø6	0.2MPa	0.25MPa
	ø10, ø16	0.15MPa	
Ambient and fluid temperature		Without auto switch: −10°C to 70°C, With auto switch: −10°C to 60°C*	
Cushion		Rubber bumper	
Lubrication		Non-lube	
Thread tolerance		JIS class 2	
Stroke tolerance		$^{+1.0}_{0}$	
Piston speed		50 to 750mm/s	
Allowable kinetic energy	ø6	0.012J	
	ø10	0.035J	
	ø16	0.090J	

∗ No freezing

⚠ Caution

Mounting

① During installation, secure the rod cover and tighten by applying an appropriate tightening force to the retaining nut or to the rod cover body. If the head cover is secured or the head cover body is tightened, the cover could rotate, leading to a deviation.

② Tighten the retaining screws to an appropriate tightening torque within the range given below.
ø6: 2.1 to 2.5Nm, ø10: 5.9 to 6.4Nm, ø16: 10.8 to 11.8Nm

③ In the case of the single acting cylinder, do not operate it in such a way that a load would be applied during the retraction of the piston rod of the spring return style, or during the extension of the piston rod of the spring extend style. The spring that is built into the cylinder provides only enough force to retract the piston rod. Thus, if a load is applied, the piston rod will not be able to retract to the end of the stroke.

④ In the case of the single acting cylinder, a breather hole is provided in the cover surface. Make sure not to block this hole during installation, as this could lead to a malfunction.

⑤ To remove and install the snap ring for the knuckle pin or the clevis pin, use an appropriate pair of pliers (tool for installing a C type snap ring). In particular, use a pair of ultra-mini pliers such as the Super Tool CSM-07A for removing and installing the snap rings on the ø10 cylinder.

⑥ In the case of the auto switch rail mounting, do not remove the rail that is mounted. Because the retaining screws extend into the cylinder, this could lead to an air leak.

Standard Stroke (mm)

Bore size	Standard stroke
6	15, 30, 45, 60
10	15, 30, 45, 60
16	15, 30, 45, 60, 75, 100, 125, 150

Spring Force (N)

Bore size (mm)	Retracted position	Extended position
6	3.72	1.77
10	6.86	3.53
16	14.2	6.86

Minimum Strokes for Auto Switch Mounting

Mounting	Auto switch model	Number of switches	Min. stroke (mm)
Band mounting (ø6, ø10, ø16)	D-C7 D-C8	2 (same surface)	50
		2(different surfaces)	15
		1	10
	D-H7□ D-H7□W(1) D-H7BAL(1) D-H7NF(1)	2 (same surface)	60
		2 (different surfaces)	15
		1	10
	D-C73C D-C80C D-H7C	2(same surface)	65
		2(different surfaces)	15
		1	10
	D-H7LF(1)	2(same surface)	65
		2 (different surfaces)	25
		1	15
Rail mounting (ø10, ø16)	D-A7/A8 D-A7□H/A80H D-A73C/A80C	2	10
		1	5
	D-F7 D-J79 D-F7□V D-J79C	2	5
		1	5
	D-A79W D-F7□W D-J79W D-F7BAL D-F7□WV D-F79F	2	15
		1	10
	D-F7LF	2	15
		1	15

Note 1) Cannot be mounted on ø6 cylinder.

Weight/Spring Return (S)

(g)

Bore size (mm)		6	10	16
Basic weight*	15 Stroke	11	28	63
	30 Stroke	16	35	80
	45 Stroke	18	44	102
	60 Stroke	23	53	124
	75 Stroke	—	—	145
	100 Stroke	—	—	188
	125 Stroke	—	—	224
	150 Stroke	—	—	250
Mounting bracket weight	Axial foot	8	8	20
	Front flange	5	5	15
	Double clevis** (with pins)	—	4	10

* This basic weight includes weights of mounting nut and rod end nut.
** The mounting nut is not attached to the double clevis, so the mounting nut weight is already reduced.

Calculation example) CJ2L10-45S
- Basic weight:..... 44 (ø10-45 stroke)
- Mounting bracket weight:..... 8 (Axial foot)

44+8=52g

Weight/Spring Extend (T)

(g)

Bore size (mm)		6	10	16
Basic weight*	15 Stroke	17	28	64
	30 Stroke	21	34	80
	45 Stroke	23	43	100
	60 Stroke	27	51	121
	75 Stroke	—	—	140
	100 Stroke	—	—	178
	125 Stroke	—	—	212
	150 Stroke	—	—	236
Mounting bracket weight	Axial foot	8	8	20
	Front flange	5	5	15
	Double clevis** (with pins)	—	4	10

* This basic weight includes weights of mounting nut and rod end nut.
** The mounting nut is not attached to the double clevis, so the mounting nut weight is already reduced.

Calculation example) CJ2L10-45T
- Basic weight: ..... 43 (ø10-45 stroke)
- Mounting bracket weight: ..... 8 (Axial foot)

43+8=52g

Mounting Bracket Part No.

Mounting bracket	Bore size (mm)		
	6	10	16
Foot	CJ-L006B	CJ-L010B	CJ-L016B
Flange	CJ-F006B	CJ-F010B	CJ-F016B
T bracket*	—	CJ-T010B	CJ-T016B

* T bracket is used with double clevis (D).

Auto Switch Mounting Bracket Part No. (Band mounting)

Bore size (mm)	Bracket part No.	Note
6	BJ2-006	Common use to all of D-C7, C8 and D-H7
10	BJ2-010	
16	BJ2-016	

Note) A set of stainless steel mounting screws "BBA4" is attached.
(A switch mounting band is not attached. Please order the band separately.) "BBA4" screws are used for D-C7/C8/H7.
"D-H7BAL" switch is set on the cylinder with the screws above when shipped.
Also, when a switch only is shipped, "BBA4" screws are attached.

Mounting Accessories/Refer to p.1-32 for details.

	Mounting	Basic	Axial foot	Front flange	Double clevis*
Standard	Mounting nut	●	●	●	—
	Rod end nut	●	●	●	●
	Clevis pin	—	—	—	●
Option	Single knuckle joint	●	●	●	●
	Double knuckle joint*	●	●	●	●
	T bracket	—	—	—	●

* Double clevis or double knuckle joint are packaged with pins and set rings. Refer to p.1-24 for the accessory weight.

Copper Free

20-CJ2 | Mounting | Bore size | — | Stroke | Action | Port location on head cover

- **Copper free**

To eliminate influences of copper ions or halogen ions during CRT manufacturing processes, copper and fluorine materials are not used as component parts.

Specifications

Action		Single acting/Spring return	Single acting/Spring extend
Bore size (mm)		ø6, ø10, ø16	
Max. operating pressure		0.7MPa	
Min. operating pressure	ø 6	0.2MPa	0.25MPa
	ø10, ø16	0.15MPa	
Cushion		Rubber bumper	
Standard stroke (mm)		Same as the standard	
Auto switch		Possible to be mounted	
Mounting		Basic, Axial foot, Front flange, Double clevis (Except for ø6)	

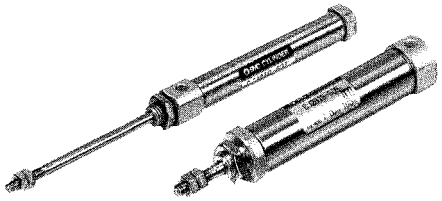

Construction (The cylinder cannot be disassembled.)

Single acting/Spring return

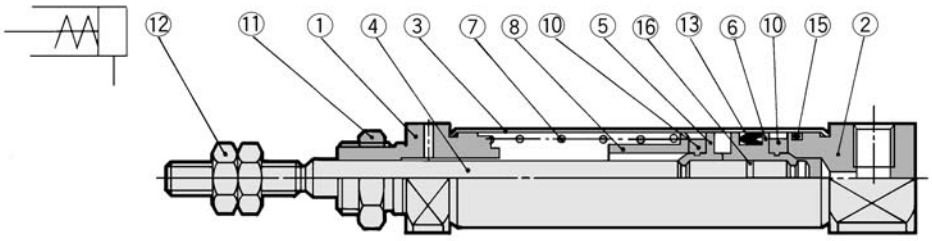

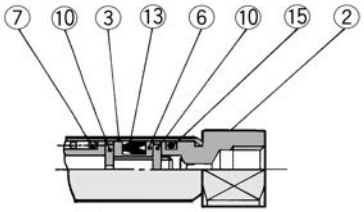

CJ2□6 Piston/Head cover

Single acting/Spring extend

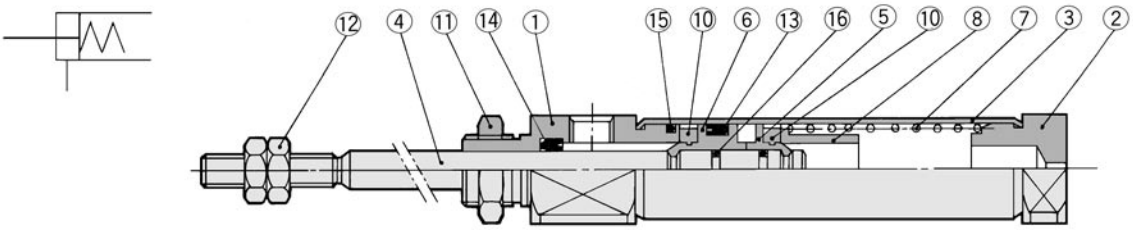

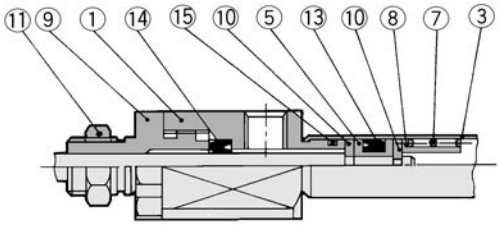

CJ2□6 Piston/Rod cover

Component Parts

No.	Description	Material	Note
①	Rod cover	Aluminum alloy	White anodized
②	Head cover	Aluminum alloy	White anodized
③	Cylinder tube	Stainless steel	
④	Piston rod	Stainless steel	
⑤	Piston A	Brass	
⑥	Piston B	Brass	
⑦	Return spring	Piano wire	
⑧	Spring seat	Brass	

No.	Description	Material	Note
⑨	Packing retainer	Aluminum alloy	White anodized (ø6 spring extend)
⑩	Bumper	Urethane	
⑪	Mounting nut	Brass	Nickel plated
⑫	Rod end nut	Rolled steel	Nickel plated
⑬	Piston seal	NBR	
⑭	Rod seal	NBR	
⑮	Tube gasket	NBR	
⑯	Piston gasket	NBR	

Single Acting/Spring Return: Basic (B)

CJ2B Bore size – Stroke **S** Port location on head cover

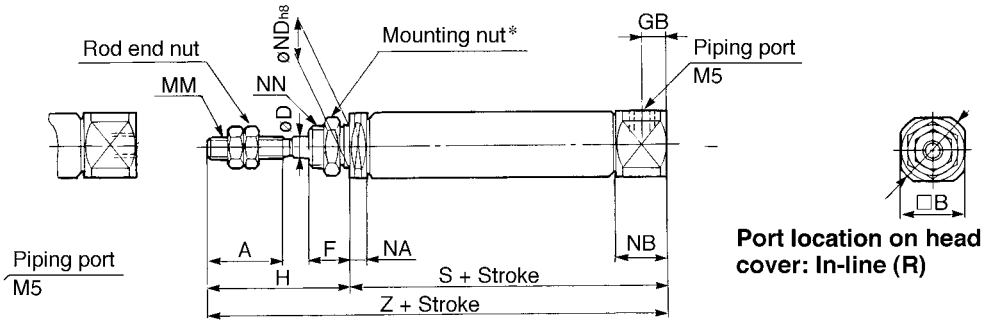

∗ Refer to p.1.3-12 for details of the mounting nut.

(mm)

Bore	A	B	C	D	F	GB	H	MM	NA	NB	ND h8	NN	S* 5 to 15st	S* 16 to 30st	S* 31 to 45st	S* 46 to 60st	S* 61 to 75st	S* 76 to 100st	S* 101 to 125st	S* 126 to 150st	Z* 5 to 15st	Z* 16 to 30st	Z* 31 to 45st	Z* 46 to 60st	Z* 61 to 75st	Z* 76 to 100st	Z* 101 to 125st	Z* 126 to 150st
6	15	8	9	3	8	—	28	M3	3	7	$6^{0}_{-0.018}$	M6 X 1.0	34.5 (39.5)	43.5 (48.5)	47.5 (52.5)	61.5 (66.5)	—	—	—	—	62.5 (67.5)	71.5 (76.5)	75.5 (80.5)	89.5 (94.5)	—	—	—	—
10	15	12	14	4	8	5	28	M4	5.5	9.5	$8^{0}_{-0.022}$	M8 X 1.0	45.5	53	65	77	—	—	—	—	73.5	81	93	105	—	—	—	—
16	15	18	20	5	8	5	28	M5	5.5	9.5	$10^{0}_{-0.022}$	M10 X 1.0	45.5	54	66	78	84	108	126	138	73.5	82	94	106	112	136	154	166

∗ ( ) in S or Z dimensions: With auto switch

Single Acting/Spring Return: Axial Foot (L)

CJ2L Bore size – Stroke **S** Port location on head cover

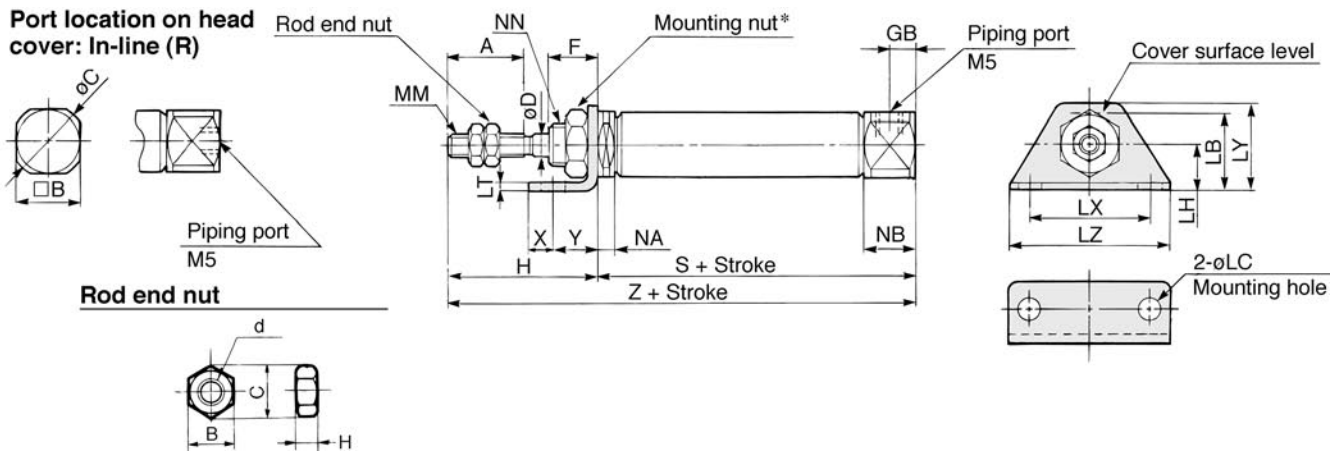

Material: Iron

Part No.	Bore	B	C	d	H
NTJ-006A	**6**	5.5	6.4	M3	2.4
NTJ-010A	**10**	7	8.1	M4	3.2
NTJ-015A	**16**	8	9.2	M5	4

∗ Refer to p.1-32 for details of the mounting nut.

(mm)

Bore	A	B	C	D	F	GB	H	LB	LC	LH	LT	LX	LY	LZ	MM	NA	NB	NN	X	Y	S* 5 to 15st	S* 16 to 30st	S* 31 to 45st	S* 46 to 60st	S* 61 to 75st	S* 76 to 100st	S* 101 to 125st	S* 126 to 150st	Z* 5 to 15st	Z* 16 to 30st	Z* 31 to 45st	Z* 46 to 60st	Z* 61 to 75st	Z* 76 to 100st	Z* 101 to 125st	Z* 126 to 150st
6	15	8	9	3	8	—	28	13	4.5	9	1.6	24	16.5	32	M3	3	7	M6 X 1.0	5	7	34.5 (39.5)	43.5 (48.5)	47.5 (52.5)	61.5 (66.5)	—	—	—	—	62.5 (67.5)	71.5 (76.5)	75.5 (80.5)	89.5 (94.5)	—	—	—	—
10	15	12	14	4	8	5	28	15	4.5	9	1.6	24	16.5	32	M4	5.5	9.5	M8 X 1.0	5	7	45.5	53	65	77	—	—	—	—	73.5	81	93	105	—	—	—	—
16	15	18	20	5	8	5	28	23	5.5	14	2.3	33	25	42	M5	5.5	9.5	M10 X 1.0	6	9	45.5	54	66	78	84	108	126	138	73.5	82	94	106	112	136	154	166

∗ ( ) in S or Z dimensions: With auto switch

Single Acting/Spring Return: Front Flange (F)

CJ2F Bore size – Stroke **S** Port location on head cover

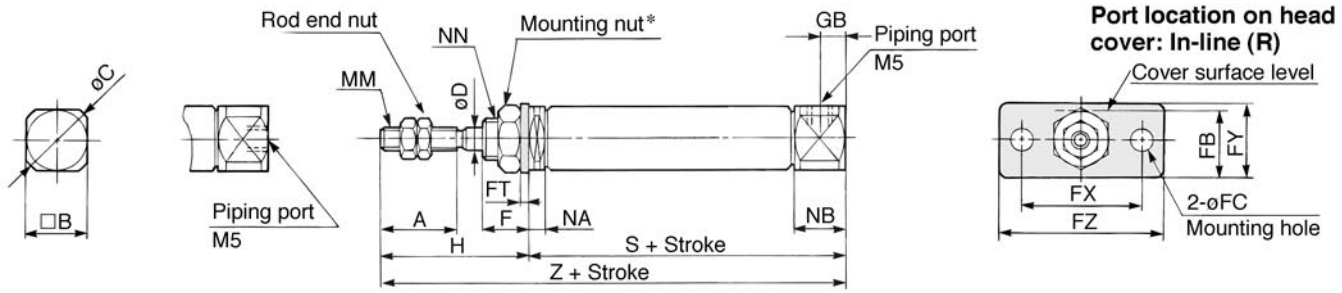

∗ Refer to p1-32 for details of the mounting nut.

(mm)

Bore	A	B	C	D	F	FB	FC	FT	FX	FY	FZ	GB	H	MM	NA	NB	NN	S* 5 to 15st	S* 16 to 30st	S* 31 to 45st	S* 46 to 60st	S* 61 to 75st	S* 76 to 100st	S* 101 to 125st	S* 126 to 150st	Z* 5 to 15st	Z* 16 to 30st	Z* 31 to 45st	Z* 46 to 60st	Z* 61 to 75st	Z* 76 to 100st	Z* 101 to 125st	Z* 126 to 150st
6	15	8	9	3	8	11	4.5	1.6	24	14	32	—	28	M3	3	7	M6 X 1.0	34.5 (39.5)	43.5 (48.5)	47.5 (52.5)	61.5 (66.5)	—	—	—	—	62.5 (67.5)	71.5 (76.5)	75.5 (80.5)	89.5 (94.5)	—	—	—	—
10	15	12	14	4	8	13	4.5	1.6	24	14	32	5	28	M4	5.5	9.5	M8 X 1.0	45.5	53	65	77	—	—	—	—	73.5	81	93	105	—	—	—	—
16	15	18	20	5	8	19	5.5	2.3	33	20	42	5	28	M5	5.5	9.5	M10 X 1.0	45.5	54	66	78	84	108	126	138	73.5	82	94	106	112	136	154	166

∗ ( ) in S or Z dimensions: With auto switch

Single Acting/Spring Return: Double Clevis (D)

CJ2D Bore size – Stroke **S**

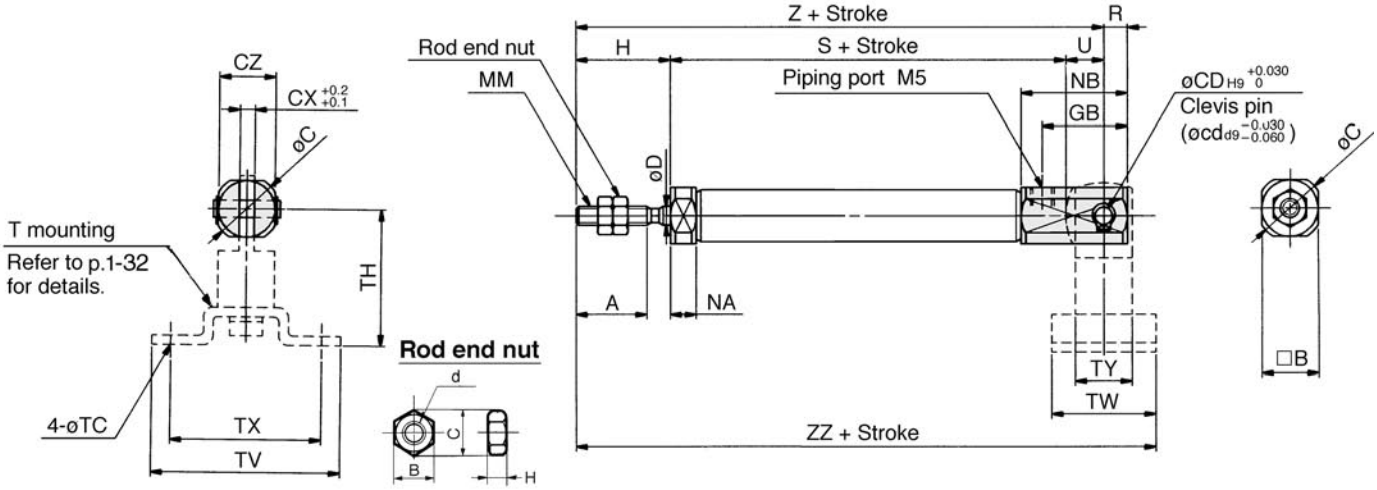

Material: Iron

Part No.	Bore	B	C	d	H
NTJ-006A	**6**	5.5	6.4	M3	2.4
NTJ-010A	**10**	7	8.1	M4	3.2
NTJ-015A	**16**	8	9.2	M5	4

∗ Clevis pins and set rings are attached.

(mm)

Bore	A	B	C	CD (cd)	CX	CZ	D	GB	H	MM	NA	NB	R	U	S 5 to 15st	S 16 to 30st	S 31 to 45st	S 46 to 60st	S 61 to 75st	S 76 to 100st	S 101 to 125st	S 126 to 150st	Z 5 to 15st	Z 16 to 30st	Z 31 to 45st	Z 46 to 60st	Z 61 to 75st	Z 76 to 100st	Z 101 to 125st	Z 126 to 150st
10	15	12	14	3.3	3.2	12	4	18	20	M4	5.5	22.5	5	8	45.5	53	65	77	—	—	—	—	73.5	81	93	105	—	—	—	—
16	15	18	20	5	6.5	18	5	23	20	M5	5.5	27.5	8	10	45.5	54	66	78	84	108	126	138	75.5	84	96	108	114	138	156	168

Bore	ZZ 5 to 15st	ZZ 16 to 30st	ZZ 31 to 45st	ZZ 46 to 60st	ZZ 61 to 75st	ZZ 76 to 100st	ZZ 101 to 125st	ZZ 126 to 150st
10	84.5	92	104	116	—	—	—	—
16	89.5	98	110	122	128	152	170	182

T mounting dimensions

Bore size	TC	TH	TV	TW	TX	TU
10	4.5	29	40	22	32	12
16	5.5	35	48	28	38	16

Single Acting/Spring Extend: Basic (B)

CJ2B Bore size – Stroke **T**

CJ2B6

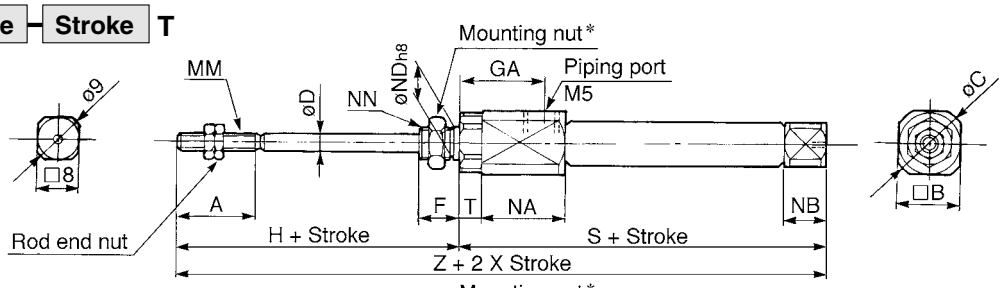

CJ2B10, 16

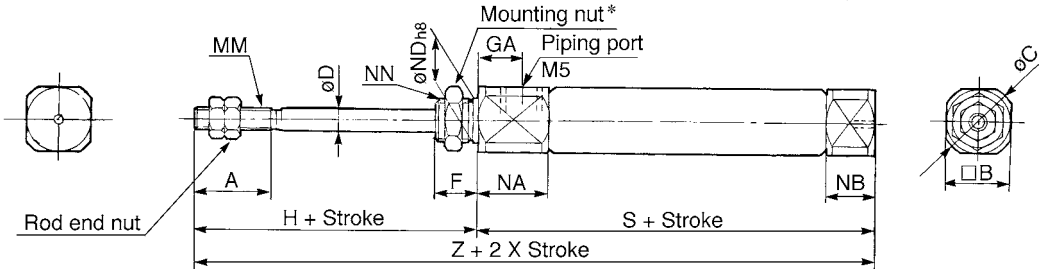

∗ Refer to p.1-32 for details of the mounting nut.

(mm)

Bore	A	B	C	D	F	GA	H	MM	NN	NA	NB	ND h8	T	S* 5 to 15st	S* 16 to 30st	S* 31 to 45st	S* 46 to 60st	S* 61 to 75st	S* 76 to 100st	S* 101 to 125st	S* 126 to 150st	Z* 5 to 15st	Z* 16 to 30st	Z* 31 to 45st	Z* 46 to 60st	Z* 61 to 75st	Z* 76 to 100st	Z* 101 to 125st	Z* 126 to 150st
6	15	12	14	3	8	14.5	28	M3	M6 X 1.0	16	3	$6^{0}_{-0.018}$	3	46.5 (51.5)	55.5 (60.5)	59.5 (64.5)	73.5 (78.5)	—	—	—	—	74.5 (79.5)	83.5 (88.5)	87.5 (92.5)	101.5 (106.5)	—	—	—	—
10	15	12	14	4	8	8	28	M4	M8 X 1.0	12.5	5.5	$8^{0}_{-0.022}$	—	48.5	56	68	80	—	—	—	—	76.5	84	96	108	—	—	—	—
16	15	18	20	5	8	8	28	M5	M10 X 1.0	12.5	5.5	$10^{0}_{-0.022}$	—	48.5	57	69	81	87	111	129	141	76.5	85	97	109	115	139	157	169

∗ ( ) in S or Z dimensions: With auto switch

Single Acting/Spring Extend: Axial Foot (L)

CJ2L Bore size – Stroke **T**

CJ2L6

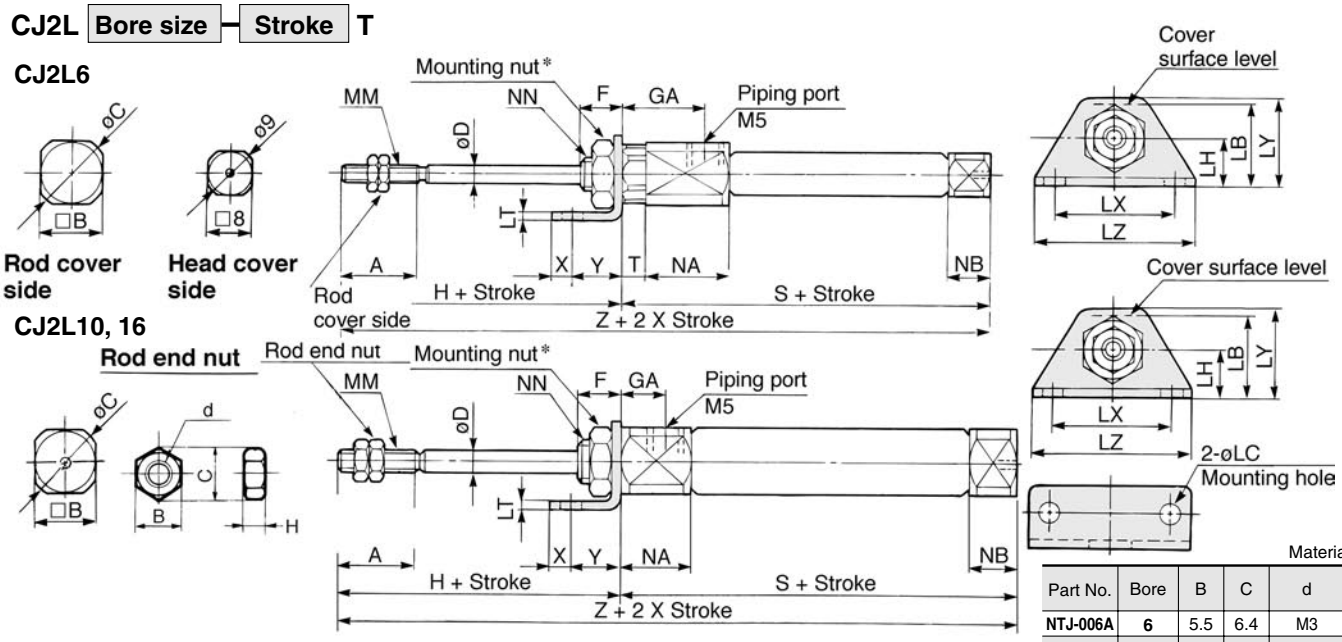

Material: Iron

Part No.	Bore	B	C	d	H
NTJ-006A	**6**	5.5	6.4	M3	2.4
NTJ-010A	**10**	7	8.1	M4	3.2
NTJ-015A	**16**	8	9.2	M5	4

∗ Refer to p.1-32 for details of the mounting nut.

(mm)

Bore	A	B	C	D	F	GA	H	LB	LC	LH	LT	LX	LY	LZ	MM	NA	NB	NN	T	X	Y	S* 5 to 15st	S* 16 to 30st	S* 31 to 45st	S* 46 to 60st	S* 61 to 75st	S* 76 to 100st	S* 101 to 125st	S* 126 to 150st	Z* 5 to 15st	Z* 16 to 30st	Z* 31 to 45st	Z* 46 to 60st	Z* 61 to 75st	Z* 76 to 100st	Z* 101 to 125st	Z* 126 to 150st
6	15	12	14	3	8	14.5	28	15	4.5	9	1.6	24	16.5	32	M3	16	3	M6 X 1.0	3	5	7	46.5 (51.5)	55.5 (60.5)	59.5 (64.5)	73.5 (78.5)	—	—	—	—	74.5 (79.5)	83.5 (88.5)	87.5 (92.5)	101.5 (106.5)	—	—	—	—
10	15	12	14	4	8	8	28	15	4.5	9	1.6	24	16.5	32	M4	12.5	5.5	M8 X 1.0	—	5	7	48.5	56	68	80	—	—	—	—	76.5	84	96	108	—	—	—	—
16	15	18	20	5	8	8	28	23	5.5	14	2.3	33	25	42	M5	12.5	5.5	M10 X 1.0	—	6	9	48.5	57	69	81	87	111	129	141	76.5	85	97	109	115	139	157	169

∗ ( ) in S or Z dimensions: With auto switch

Single Acting/Spring Extend: Front Flange (F)

CJ2F Bore size – Stroke **T**

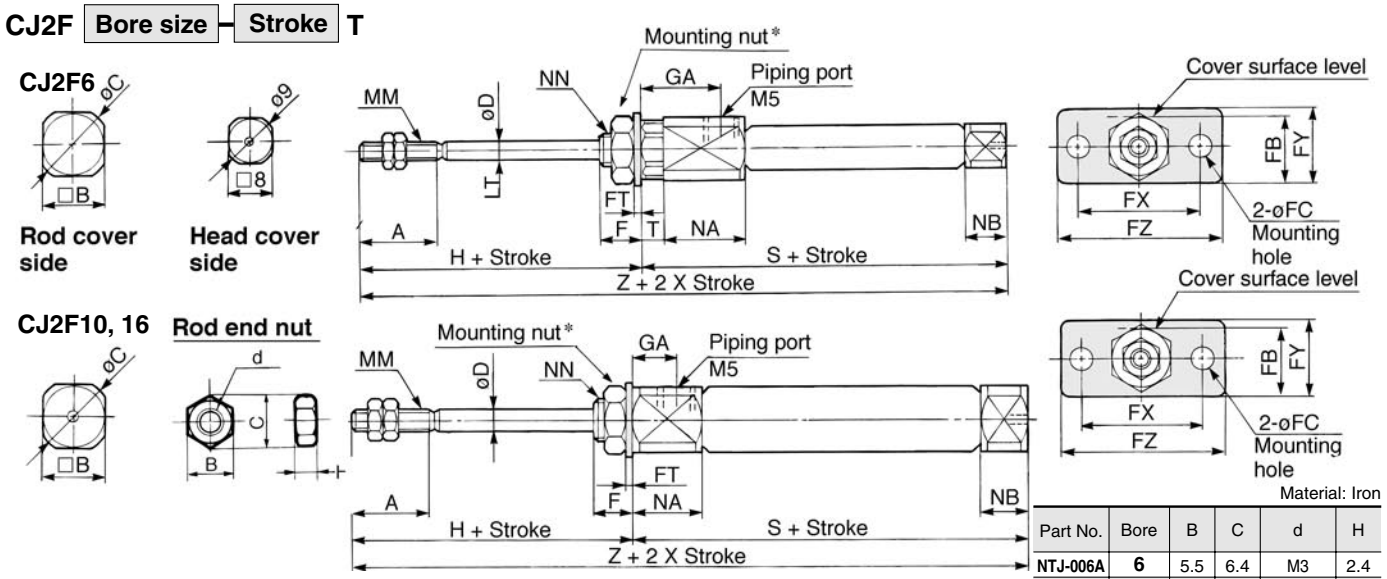

Material: Iron

Part No.	Bore	B	C	d	H
NTJ-006A	6	5.5	6.4	M3	2.4
NTJ-010A	10	7	8.1	M4	3.2
NTJ-015A	16	8	9.2	M5	4

∗ Refer to p.1-32 for details of the mounting nut.

(mm)

Bore	A	B	C	D	F	FB	FC	FT	FX	FY	FZ	GA	H	MM	NA	NB	NN	T	S* 5 to 15st	S* 16 to 30st	S* 31 to 45st	S* 46 to 60st	S* 61 to 75st	S* 76 to 100st	S* 101 to 125st	S* 126 to 150st	Z* 5 to 15st	Z* 16 to 30st	Z* 31 to 45st	Z* 46 to 60st	Z* 61 to 75st	Z* 76 to 100st	Z* 101 to 125st	Z* 126 to 150st
6	15	12	14	3	8	13	4.5	1.6	24	14	32	14.5	28	M3	16	3	M6 X 1.0	3	46.5 (51.5)	55.5 (60.5)	59.5 (64.5)	73.5 (78.5)	—	—	—	—	74.5 (79.5)	83.5 (88.5)	87.5 (92.5)	101.5 (106.5)	—	—	—	—
10	15	12	14	4	8	13	4.5	1.6	24	14	32	8	28	M4	12.5	5.5	M8 X 1.0	—	48.5	56	68	80	—	—	—	—	76.5	84	96	108	—	—	—	—
16	15	18	20	5	8	19	5.5	2.3	33	20	42	8	28	M5	12.5	5.5	M10 X 1.0	—	48.5	57	69	81	87	111	129	141	76.5	85	97	109	115	139	157	169

∗ ( ) in S or Z dimensions: With auto switch

Single Acting/Spring Extend: Double Clevis (D)

CJ2D Bore size – Stroke **T**

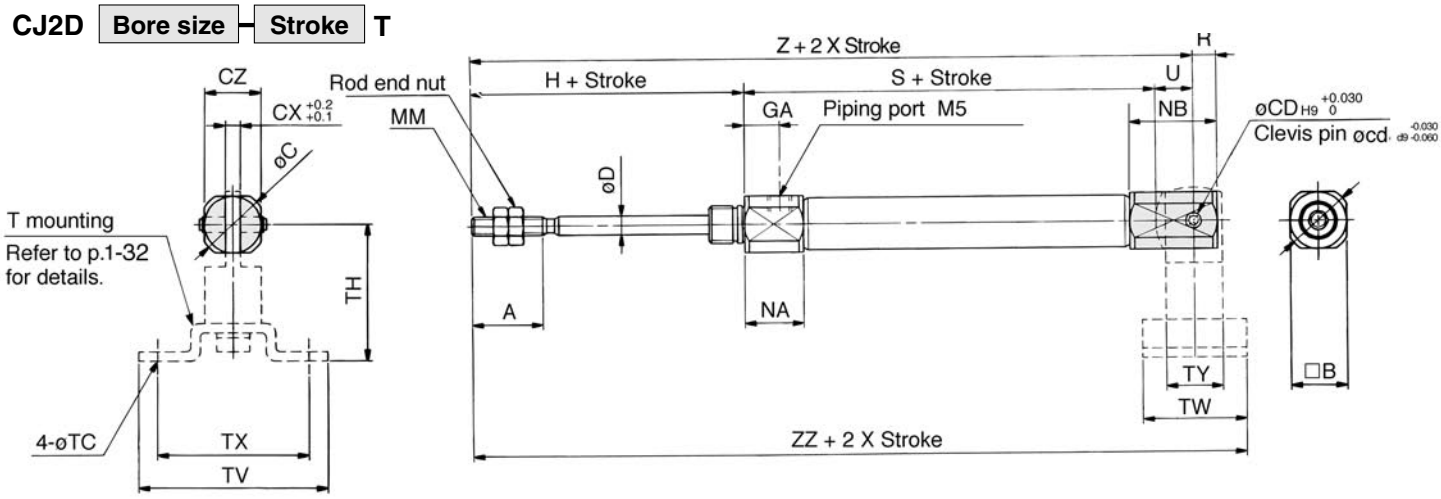

∗ Clevis pins and set rings are attached.

(mm)

Bore	A	B	C	CD (cd)	CX	CZ	D	GA	H	MM	NA	NB	R	U	S 5 to 15st	S 16 to 30st	S 31 to 45st	S 46 to 60st	S 61 to 75st	S 76 to 100st	S 101 to 125st	S 126 to 150st	Z 5 to 15st	Z 16 to 30st	Z 31 to 45st	Z 46 to 60st	Z 61 to 75st	Z 76 to 100st	Z 101 to 125st	Z 126 to 150st
10	15	12	14	3.3	3.2	12	4	8	28	M4	12.5	18.5	5	8	48.5	56	68	80	—	—	—	—	84.5	92	104	116	—	—	—	—
16	15	18	20	5	6.5	18	5	8	28	M5	12.5	23.5	8	10	48.5	57	69	81	87	111	129	141	86.5	95	107	119	125	149	167	179

(mm)

Bore	ZZ 5 to 15st	ZZ 16 to 30st	ZZ 31 to 45st	ZZ 46 to 60st	ZZ 61 to 75st	ZZ 76 to 100st	ZZ 101 to 125st	ZZ 126 to 150st
10	95.5	103	115	127	—	—	—	—
16	100.5	109	121	133	139	163	181	193

T mounting dimensions

Bore size	TC	TH	TV	TW	TX	TY
10	4.5	29	40	22	32	12
16	5.5	35	48	28	38	16

Auto Switch Mounting Position: Single Acting/Spring Return (S)

Reed Switch

<Band mounting>

D-C7/C8

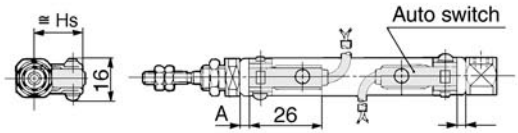

D-C73C/C80C

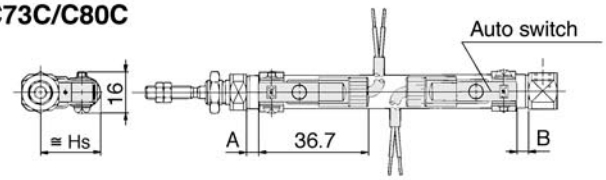

Solid State Switch

<Band mounting>

D-H7□/H7□W/H7BAL D-H7□F

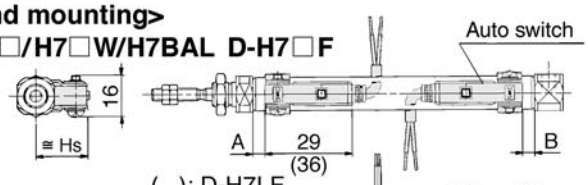

( ): D-H7LF

D-H7C

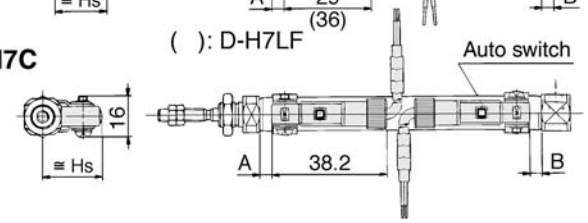

<Rail mounting>

D-A7/A8

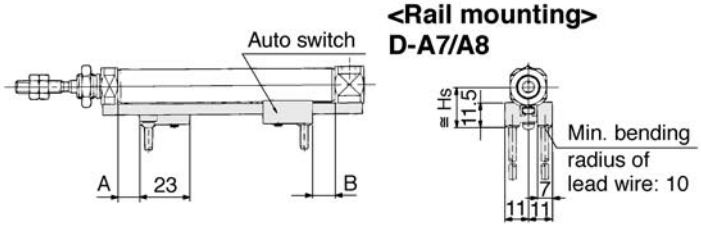

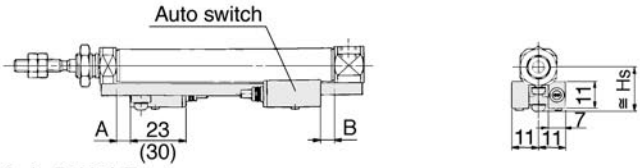

( ): D-H7LF

D-A79W

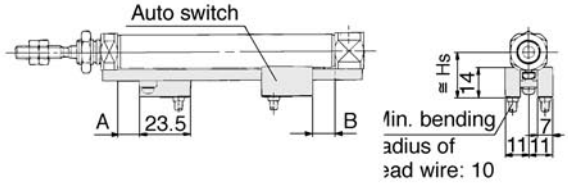

D-F7□V/D-F7□WV

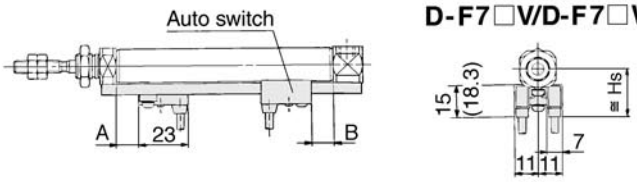

D-A7□H/A80H

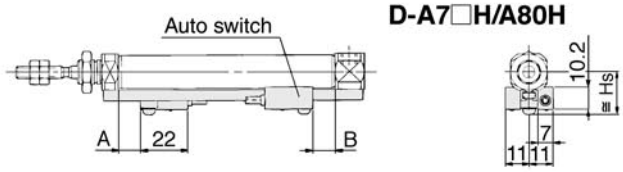

D-J79C

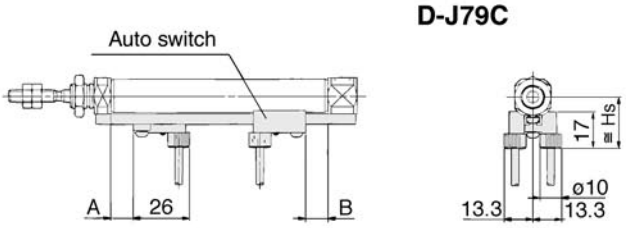

D-A73C/A80C

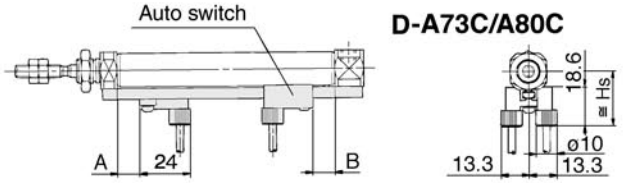

Auto Switch Mounting Position/Spring Return

(mm)

Auto switch model	Bore (mm)	A dimensions 10 to 15st	16 to 30st	31 to 45st	46 to 60st	61 to 75st	76 to 100st	101 to 125st	126 to 150st	B
D-C7/C8	6	8.5	17.5	21.5	35.5	—	—	—	—	2.0
D-C73C	10	9.0	16.5	28.5	40.5	—	—	—	—	2.5
D-C80C	16	8.5	17.0	29.0	41.0	47	71	89	101	3.0
D-H7□	6	7.5	16.5	20.5	34.5	—	—	—	—	1.0
D-H7C	10	8.0	15.5	27.5	39.5	—	—	—	—	1.5
	16	7.5	16.0	28.0	40.0	46	70	88	100	2.0
D-H7□W	6	6.0	15.0	19.0	33.0	—	—	—	—	0
D-H7□F	10	6.5	14.0	26.0	38.0	—	—	—	—	0
D-H7BAL	16	6.0	14.5	26.5	38.5	44.5	68.5	86.5	98.5	0.5
D-A7/A8	10	9.5	17.0	29.0	41.0	—	—	—	—	
	16	9	17.5	29.5	41.5	47.5	71.5	89.5	101.5	3.5
D-A73C/A80C D-F7/J7 D-A7□H/A80H D-F7□V/J79C	10	10.0	17.5	29.5	41.5	—	—	—	—	3.5
	16	9.5	18.0	30.0	42.0	48	72	90	102	4.0
D-F7□WV	10	10.5	18.0	30.0	42.0	—	—	—	—	4.0
	16	10.0	18.5	30.5	42.5	48.5	72.5	90.5	102.5	4.5
D-F7BAL/F7□W	10	14.0	21.5	33.5	45.5	—	—	—	—	7.5
D-F7□F/J79W	16	13.5	22.0	34.0	46.0	52	76	94	106	8.0
D-A79W	10	7.0	14.5	26.5	38.5	—	—	—	—	0.5
	16	6.5	15.0	27.0	39.0	45	69	87	99	1.0

Auto Switch Mounting Height

(mm)

Auto switch model	Bore (mm)	≅ HS
D-C7/C8	6	15.0
D-H7□/H7□W	10	17.0
D-H7□F/H7BAL	16	20.5
D-C73C	6	17.5
D-C80C	10	19.5
	16	23.0
D-H7C	6	18.0
	10	20.0
	16	23.5
D-A7	10	16.5
D-A8	16	19.5
D-A7□H/A80H D-F7/J7 D-F7□W/J79W D-F7BAL/F7□F	10	17.5
	16	20.5
D-A73C/A80C	10	23.5
	16	26.5
D-F7□V	10	20.0
D-F7□WV	16	23.0
D-J79C	10	23.0
	16	26.0
D-A79W	10	19.0
	16	22.0

Auto Switch Mounting Position: Single Acting/Spring Extend (T)

Reed Switch

<Band mounting>

D-C7/C8

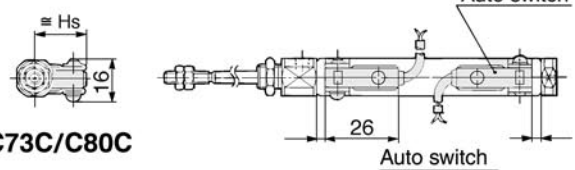

D-C73C/C80C

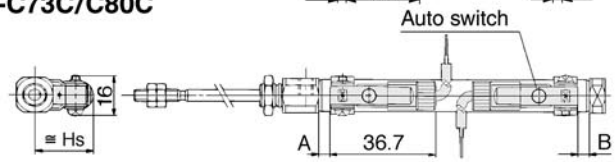

<Rail mounting>

D-A7/A8

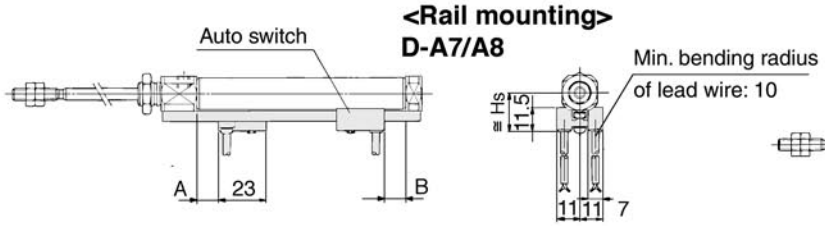

D-A79W

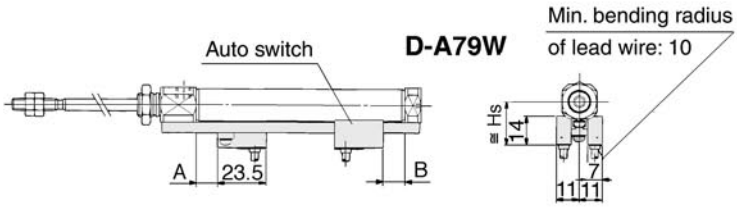

D-A73C/A80C

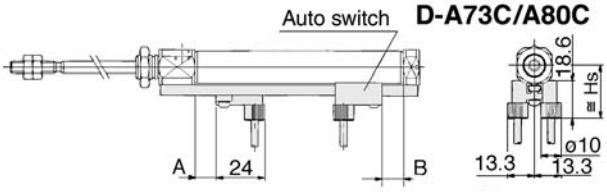

D-A7□H/A80H

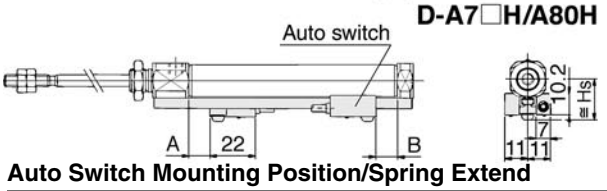

Solid State Switch

<Band mounting>

D-H7□/H7□W/H7BAL/H7□F

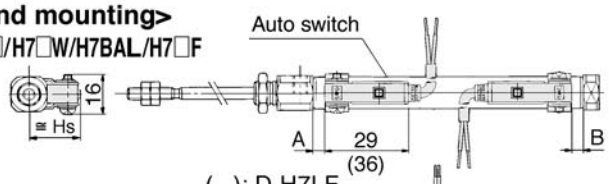

D-H7C

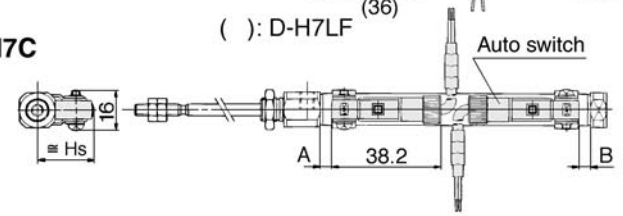

<Rail mounting>

D-F7/J7/D-F7□W/D-J79W
D-F7□F/D-F7BAL

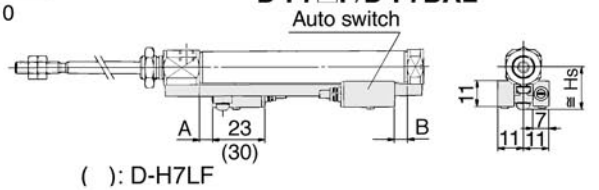

D-F7□V/D-F7□WV

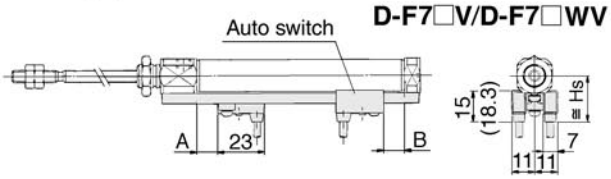

D-J79C

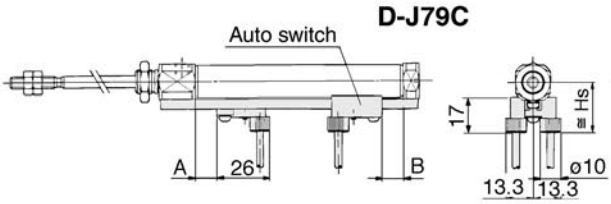

Auto Switch Mounting Position/Spring Extend

(mm)

Auto switch model	Bore (mm)	A All stroke	B dimensions 10 to 15st	16 to 30st	31 to 45st	46 to 60st	61 to 75st	76 to 100st	101 to 125st	126 to 150st
D-C7/C8 D-C73C D-C80C	6	2.0	8.5	17.5	21.5	35.5	—	—	—	—
	10	2.5	9.0	16.5	28.5	40.5	—	—	—	—
	16	3.0	8.5	17.0	29.0	41.0	47	71	89	101
D-H7□ D-H7C	6	1.0	7.5	16.5	20.5	34.5	—	—	—	—
	10	1.5	8.0	15.5	27.5	39.5	—	—	—	—
	16	2.0	7.5	16.0	28.0	40.0	46	70	88	100
D-H7□W D-H7□F D-H7BAL	6	0	6.0	15.0	19.0	33.0	—	—	—	—
	10	0	6.5	14.0	26.0	38.0	—	—	—	—
	16	0.5	6.0	14.5	26.5	38.5	44.5	68.5	86.5	98.5
D-A7/A8	10	3.0	9.5	17.0	29.0	41.0	—	—	—	—
	16	3.5	9.0	17.5	29.5	41.5	47.5	71.5	87.5	101.5
D-A73C/A80C D-F7/J7 D-A7□H/A80H D-F7□V/J79C	10	3.5	10.0	17.5	29.5	41.5	—	—	—	—
	16	4.0	9.5	18.0	30.0	42.0	48	72	90	102
D-F7□WV	10	4.0	10.5	18.0	30.0	42.0	—	—	—	—
	16	4.5	10.0	18.5	30.5	42.5	48.5	72.5	90.5	102.5
D-F7BAL/F7□W D-F7□F/J79W	10	7.5	14.0	21.5	33.5	45.5	—	—	—	—
	16	8.0	13.5	22.0	34.0	46.0	52	76	94	106
D-A79W	10	0.5	7.0	14.5	26.5	38.5	—	—	—	—
	16	1.0	6.5	15.0	27.0	39.0	45	69	87	99

Auto Switch Mounting Height (mm)

Auto switch model	Bore (mm)	≅ HS
D-C7/C8 D-H7□/H7□W D-H7□F/H7BAL	6	15.0
	10	17.0
	16	20.5
D-C73C D-C80C	6	17.5
	10	19.5
	16	23.0
D-H7C	6	18.0
	10	20.0
	16	23.5
D-A7 D-A8	10	16.5
	16	19.5
D-A7□H/A80H D-F7/J7 D-F7□W/J79W D-F7BAL/F7□F	10	17.5
	16	20.5
D-A73C D-A80C	10	23.5
	16	26.5
D-F7□V D-F7□WV	10	20.0
	16	23.0
D-J79C	10	23.0
	16	26.0
D-A79W	10	19.0
	16	22.0

Non-rotating Rod: Double Acting Single Rod

Series CJ2K

ø10, ø16

How to Order

Bore size

10	10mm
16	16mm

Mounting

B	Basic
L	Axial foot
F	Front flange
D	Double clevis

Standard stroke (mm)

ø10	15, 30, 45, 60, 75, 100, 125, 150
ø16	15, 30, 45, 60, 75, 100, 125, 150, 175, 200

Standard CJ2K [L] [16] — [60] [ ]

With auto switch CDJ2K [L] [16] — [60] [ ] — [C73] [ ]

With auto switch
(Built-in magnet)

Port location on head cover

Symbol	Port location
—	Perpendicular
R	In-line

∗ Refer to p.1-51 for the configuration.

Auto switch

∗ Refer to the table below for selecting applicable auto switches.

∗ If requiring a built-in-magnet cylinder without an auto switch, refer to the model number example below.

Number of switches

—	2
S	1
n	n

Applicable Auto Switches

Style	Special function	Electrical entry	Indicator	Wiring (Output)	Load voltage DC	Load voltage DC	Load voltage AC	Auto switch model** Band	Rail Perp.	Rail In-line	Lead wire* (m) 0.5 (—)	3 (L)	5 (Z)	None (N)	Applicable load	
Reed switch	—	Grommet	Yes	3 wire (NPN)	—	5V	—	**C76**	—	**A76H**	●	●	—	—	IC	—
				2 wire	—	—	200V	—	**A72**	**A72H**	●	●	—	—	—	Relay PLC
					24V	12V	100V	**C73**	**A73**	**A73H**	●	●	●	—		
			No			5V, 12V	≤100V	**C80**	**A80**	**A80H**	●	●	—	—	IC	
		Connector	Yes			12V	—	**C73C**	**A73C**	—	●	●	●	●	—	
			No			5V,12V	≤24V	**C80C**	**A80C**	—	●	●	●	●	IC	
	Diagnostic indication (2 colour)	Grommet	Yes			—	—	—	**A79W**	—	●	●	—	—	—	
Solid state switch	—	Grommet	Yes	3 wire (NPN)	24V	5V, 12V	—	**H7A1**	**F7NV**	**F79**	●	●	○	—	IC	Relay PLC
				3 wire (PNP)				**H7A2**	**F7PV**	**F7P**	●	●	○	—		
				2 wire		12V	—	**H7B**	**F7BV**	**J79**	●	●	○	—	—	
		Connector						**H7C**	**J79C**	—	●	●	●	●		
	Diagnostic indication (2 colour)	Grommet		3 wire (NPN)		5V, 12V	—	**H7NW**	**F7NWV**	**F79W**	●	●	○	—	IC	
				3 wire (PNP)				**H7PW**	—	**F7PW**	●	●	○	—		
				2 wire		12V		**H7BW**	**H7BWV**	**J79W**	●	●	○	—	—	
	Water resistant (2 colour)							**H7BA**	—	**F7BA**	—	●	○	—		
	With timer			3 wire (NPN)		5V, 12V		—	—	**F7NT**	—	●	○	—	IC	
	With diagnostic output (2 colour)			4 wire (NPN)				**H7NF**	—	**F79F**	●	●	○	—		
	Latch with diagnostic output (2 colour)					—		**H7LF**	—	**F7LF**	●	●	○	—	—	

∗ Lead wire length 0.5m·····— e.g.) C73C 5m·····Z e.g.) C73CZ
3m·····L C73CL None·····N C73CN

∗ Solid state switches marked with" ○ " are manufactured upon receipt of order.

∗∗ "D-A79W" cannot be mounted on bore size ø10 cylinder with air cushion.

Part No. of Cylinder with Built-in Magnet

Symbol "-A" (rail mounting) or "-B" (band mounting) should be suffixed to the part No. of the cylinder with auto switch.

Ex.	Rail mounting	CDJ2KB16-60-A
	Band mounting	CDJ2KB10-45-B

A cylinder in which the rod does not rotate because of its hexagonal shape.

Non-rotating accuracy
ø10: ±1.5°, ø16: ±1°
Can operate without lubrication.

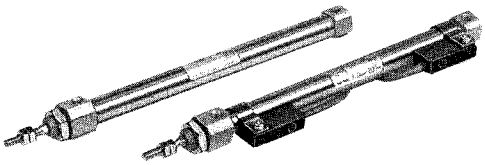

JIS symbol

Double acting/Single rod

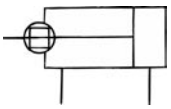

Port Location on Head Cover

Either perpendicular to the cylinder axis or in-line with the cylinder axis is available for basic style.

In-line

Perpendicular

⚠ Caution

Mounting

① During installation, secure the rod cover and tighten by applying an appropriate tightening force to the retaining nut or to the rod cover body. If the head cover is secured or the head cover body is tightened, the cover could rotate, leading to a deviation.
② Tighten the retaining screws to an appropriate tightening torque within the range given below.
ø10: 10.8 to 11.8Nm, ø16: 20 to 21Nm
③ In the case of the non-rotating cylinder, do not operate it in such a way that rotational toque would be applied to the piston rod. If rotational torque is applied, the non-rotating guide will become deformed, thus affecting the non-rotating accuracy.
④ To screw a bracket or a nut onto the threaded portion at the tip of the piston rod by placing a wrench over the parallel section of the piston rod, make sure to retract the piston rod entirely, and use the portion of the rod that protrudes. To tighten, take precautions to prevent the tightening torque from being applied to the non-rotating guide.
⑤ To remove and install the snap ring for the knuckle pin or the clevis pin, use an appropriate pair of pliers (tool for installing a C type snap ring). In particular, use a pair of ultra-mini pliers such as the Super Tool CSM-07A for removing and installing the snap rings on the ø10 cylinder.
⑥ In the case of the auto switch rail mounting, do not remove the rail that is mounted. Because the retaining screws extend into the cylinder, this could lead to an air leak.

Specifications

Action		Double acting/Single rod
Fluid		Air
Proof pressure		1.05MPa
Max. operating pressure		0.7MPa
Min. operating pressure		0.06MPa
Ambient and fluid temperature		Without auto switch: −10°C to 70°C, With auto switch: −10°C to 60°C*
Cushion		Rubber bumper
Lubrication		Non-lube
Thread tolerance		JIS class 2
Stroke tolerance		$^{+1.0}_{0}$
Non-rotating accuracy	ø10	±1.5°
	ø16	±1°
Mounting		Basic , Axial foot, Front flange, Double clevis
Piston speed		50 to 750mm/s
Allowable kinetic energy	ø10	0.035J
	ø16	0.090J

* No freezing

Standard Stroke

(mm)

Bore size	Standard stroke
10	15, 30, 45, 60, 75, 100, 125, 150
16	15, 30, 45, 60, 75, 100, 125, 150, 175, 200

Minimum Strokes for Auto Switches Mounting

• Refer to p.1-23

Mounting Accessories/ Refer to p.1-32 for details.

	Mounting	Basic	Axial foot	Front flange	Double clevis*
Standard	Mounting nut	●	●	●	—
	Rod end nut	●	●	●	●
	Clevis pin	—	—	—	●
Option	Single knuckle joint	●	●	●	●
	Double knuckle joint*	●	●	●	●
	T bracket	—	—	—	●

* Double clevis or double knuckle joint is packaged with pins and rings.

Weight

(g)

Bore size (mm)		10	16
Basic weight*		24	55
Additional weight for each 15 of stroke		4	6.5
Mounting bracket weight	Axial foot	20	20
	Front flange	15	15
	Double clevis** (with pins)	4	10

∗ This basic weight includes weights of mounting nut and rod end nut.
∗∗ The mounting nut is not attached to the double clevis style, so the mounting nut weight is already reduced.

Calculation example: CJ2KL10-45
- Basic weight: 24 (ø10)
- Additional weight: 4/15 stroke
- Cylinder stroke: 45 stroke
- Mounting bracket weight: 20 (Axial foot)

24+4/15 X 45+20=56g

⚠ Caution

Handling

<Mounting>

•Avoid using the air cylinder in such a way that rotational torque would be applied to the piston rod because this will deform the non-rotating guide, thus affecting the non-rotating accuracy. Refer to the table below for the approximate values of the allowable range of rotational torque.

Allowable rotational torque Nm	ø10	ø16
	0.02	0.04

•Operate the cylinder in such a way that the load to the piston rod is always applied in the axial direction.

•To screw a bracket onto the threaded portion at the tip of the piston rod, make sure to retract the piston rod entirely, and place a wrench over the flat portion of the rod that protrudes. To tighten, take precautions to prevent the tightening torque from being applied to the non-rotating guide.

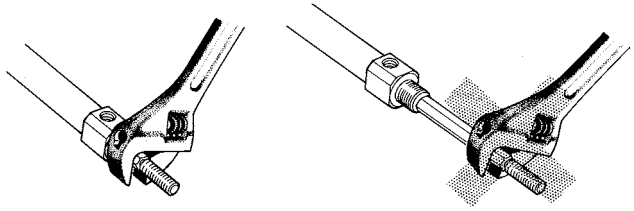

Mounting Bracket Part No.

Mounting bracket	Bore size (mm)	
	10	16
Foot	CJ-L016B	CJK-L016B
Flange	CJ-F016B	CJK-F016B
T bracket*	CJ-T010B	CJ-T016B

∗ T bracket is used with double clevis (D).

Auto Switch Mounting Bracket Part No. (Band mounting)

Bore size (mm)	Bracket part No.	Note
10	BJ2-010	Common use to all of D-C7, C8 and D-H7
16	BJ2-016	

Copper Free

20-CJ2K | Mounting | Bore size | – | Stroke | Port location on head cover |

● Copper free

To eliminate influences of copper ions or halogen ions during CRT manufacturing processes, copper and fluorine materials are not used as component parts.

Specifications

Action		Double acting/Single rod
Max. operating pressure		0.7MPa
Min. operating pressure		0.06MPa
Cushion		Rubber bumper (standard)
Rod non-rotating accuracy	ø10	±1.5°
	ø16	±1°
Standard stroke (mm)		Same as the standard
Auto switch		Possible to be mounted
Mounting		Basic, Axial foot, Front flange, Double clevis

Note) A set of stainless steel mounting screws "BBA4" is attached. (A switch mounting band is not attached. Please order the band separately.)
"BBA4" screws are used for D-C7/C8/H7.
"D-H7BAL" switch is set on the cylinder with the screws above when shipped.
Also, when a switch only is shipped, "BBA4" screws are attached.

Construction (The cylinder cannot be disassembled.)

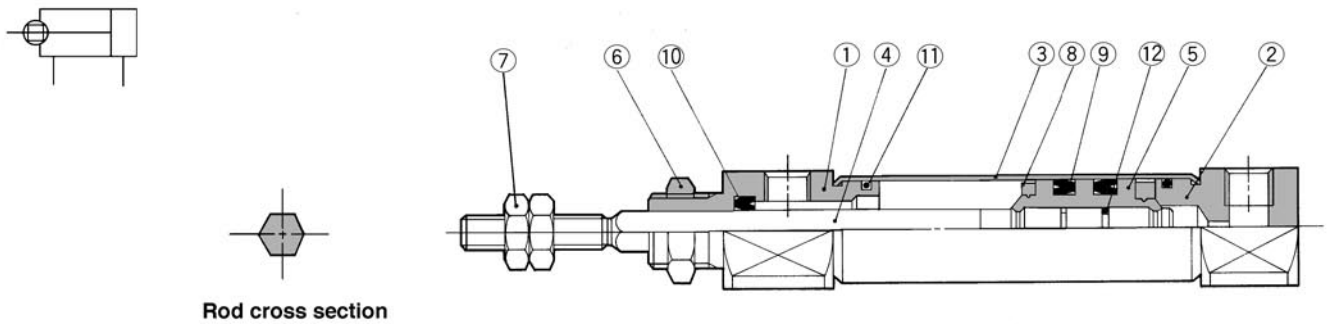

Component Parts

No.	Description	Material	Note
①	Rod cover	Aluminum alloy	White anodized
②	Head cover	Aluminum alloy	White anodized
③	Cylinder tube	Stainless steel	
④	Piston rod	Stainless steel	
⑤	Piston	Brass	
⑥	Mounting nut	Brass	Nickel plated

No.	Description	Material	Note
⑦	Rod end nut	Rolled steel	Nickel plated
⑧	Bumper	Urethane	
⑨	Piston seal	NBR	
⑩	Rod seal	NBR	
⑪	Tube gasket	NBR	
⑫	Piston gasket	NBR	

Basic (B)

CJ2KB Bore size – Stroke | Port location on head cover

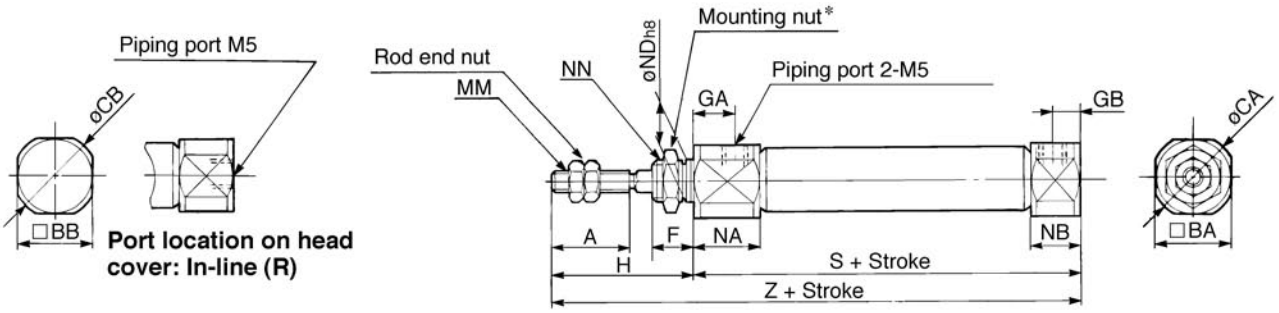

∗ Refer to p.1-32 for details of the mounting nut. (SNJ-016B for ø10, SNKJ-016B for ø16)

(mm)

Bore	A	BA	BB	CA	CB	F	GA	GB	H	KA	MM	NA	NB	NDh8	NN	S	Z
10	15	15	12	17	14	8	8	5	28	4.2	M4	12.5	9.5	$10^{0}_{-0.022}$	M10 X 1.0	46	74
16	15	18	18	20	20	8	8	5	28	5.2	M5	12.5	9.5	$12^{0}_{-0.027}$	M12 X 1.0	47	75

Axial Foot (L)

CJ2KL Bore size – Stroke | Port location on head cover

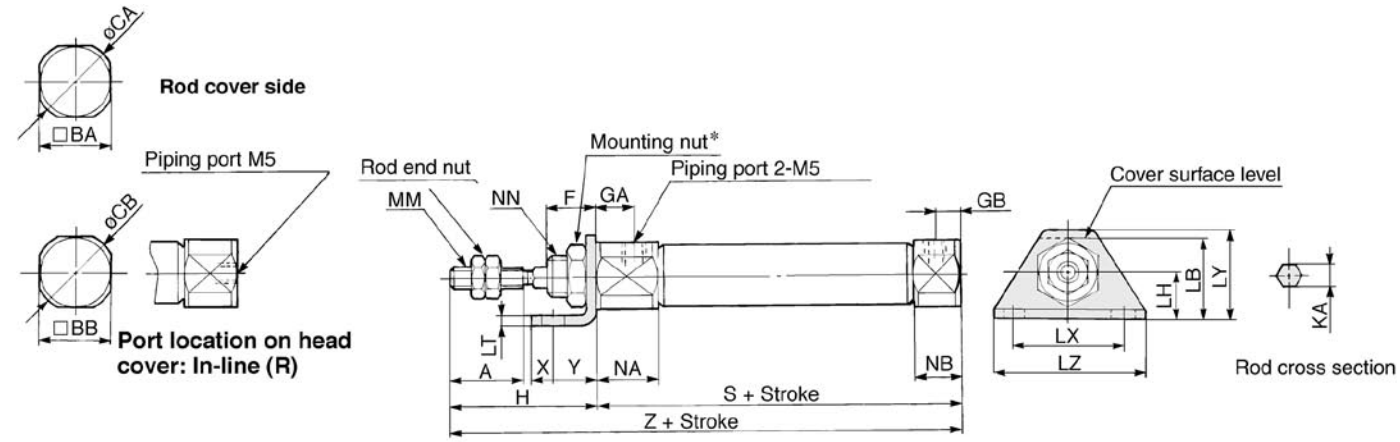

Rod end nut

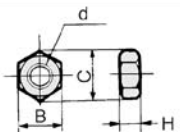

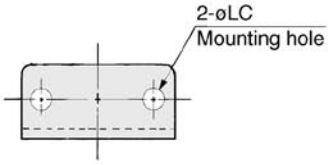

Material: Iron

Part No.	Bore	B	C	d	H
NTJ-010A	**10**	7	8.1	M4	3.2
NTJ-015A	**16**	8	9.2	M5	4

∗ Refer to p.1-32 for details of the mounting nut. (SNJ-016B for ø10, SNKJ-016B for ø16)

(mm)

Bore	A	BA	BB	CA	CB	F	GA	GB	H	KA	LB	LC	LH	LT	LX	LY	LZ	MM	NA	NB	NN	X	Y	S	Z
10	15	15	12	17	14	8	8	5	28	4.2	21.5	5.5	14	2.3	33	25	42	M4	12.5	9.5	M10 X 1.0	6	9	46	74
16	15	18	18	20	20	8	8	5	28	5.2	23	5.5	14	2.3	33	25	42	M5	12.5	9.5	M12 X 1.0	6	9	47	75

Front Flange (F)

CJ2KF Bore size – Stroke Port location on head cover

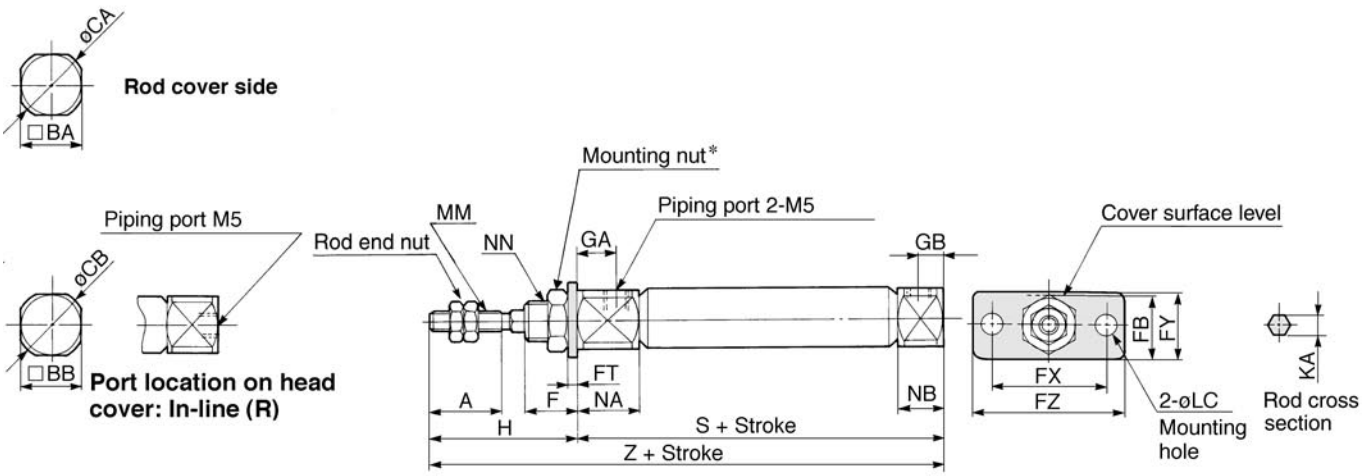

* Refer to p.1-32 for details of the mounting nut. (SNJ-016B for ø10, SNKJ-016B for ø16)

(mm)

Bore	A	BA	BB	CA	CB	F	FB	FC	FT	FX	FY	FZ	GA	GB	H	KA	MM	NA	NB	NN	S	Z
10	15	15	12	17	14	8	17.5	5.5	2.3	33	20	42	8	5	28	4.2	M4	12.5	9.5	M10 X 1.0	46	74
16	15	18	18	20	20	8	19	5.5	2.3	33	20	42	8	5	28	5.2	M5	12.5	9.5	M12 X 1.0	47	75

Double Clevis (D)

CJ2KD Bore size – Stroke

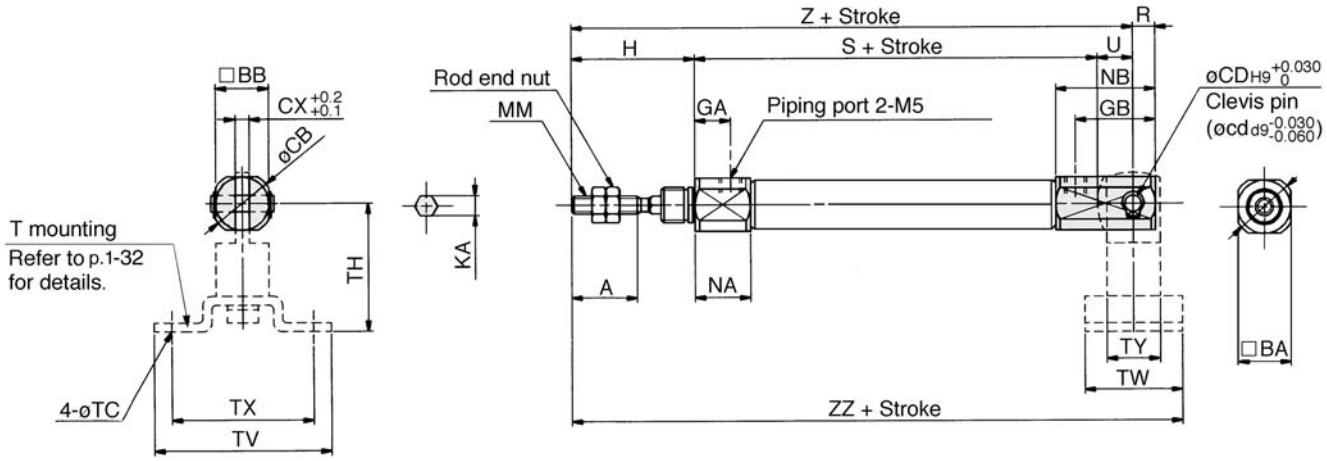

Material: Iron

Part No.	Bore	B	C	d	H
NTJ-010A	**10**	7	8.1	M4	3.2
NTJ-015A	**16**	8	9.2	M5	4

* Clevis pins and set rings are attached.

Bore	A	BA	BB	CA	CB	CD(cd)	CX	GA	GB	H	KA	MM	NA	NB	R	S	U	Z	ZZ
10	15	15	12	17	14	3.3	3.2	8	18	28	4.2	M4	12.5	22.5	5	46	8	82	93
16	15	18	18	20	20	5	6.5	8	23	28	5.2	M5	12.5	27.5	8	47	10	85	99

T mounting dimensions

(mm)

Bore	TC	TH	TV	TW	TX	TY
10	4.5	29	40	22	32	12
16	5.5	35	48	28	38	16

Non-rotating Rod: Single Acting Spring Return/Extend

Series CJ2K

ø10, ø16

How to Order

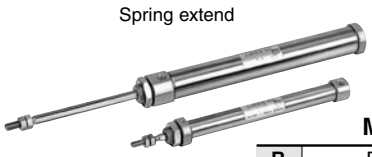

Spring extend

Spring return

Bore size

10	10mm
16	16mm

Mounting

B	Basic
L	Axial foot
F	Front flange
D	Double clevis

Standard stroke (mm)

ø10	15, 30, 45, 60
ø16	15, 30, 45, 60, 75, 100, 125, 150

Action

S	Single acting/Spring return
T	Single acting/Spring extend

Standard CJ2K [L] [16] — [45] [S] [ ]

With auto switch CDJ2K [L] [16] — [45] [S] [ ] — [C73] [ ]

With auto switch
(Built-in magnet)

Port location on head cover

Symbol	Port location on head cover
—	Perpendicular
R	In-line

∗ Refer to p.1-51 for the configuration.
∗ Not applicable to single acting/spring extend (T).

Auto switch

∗ Refer to the table below for selecting applicable auto switches.
∗ If requiring a built-in-magnet cylinder without an auto switch, refer to the model number example below.

Number of switches

—	2
S	1
n	n

Applicable Auto Switches

Style	Special function	Electrical entry	Indicator	Wiring (Output)	Load voltage DC		Load voltage AC	Auto switch model** Band	Rail Perp.	Rail In-line	Lead wire* (m) 0.5 (—)	3 (L)	5 (Z)	None (N)	Applicable load	
Reed switch	—	Grommet	Yes	3 wire (NPN)	—	5V	—	**C76**	—	**A76H**	●	●	—	—	IC	—
				2 wire	—	—	200V	—	**A72**	**A72H**	●	●	—	—	—	Relay PLC
			No		24V	12V	100V	**C73**	**A73**	**A73H**	●	●	●	—		
						5V, 12V	≤100V	**C80**	**A80**	**A80H**	●	●	—	—	IC	
		Connector	Yes			12V	—	**C73C**	**A73C**	—	●	●	●	●	—	
			No			5V, 12V	≤24V	**C80C**	**A80C**	—	●	●	●	●	IC	
	Diagnostic indication (2 colour)	Grommet	Yes			—	—	—	**A79W**	—	●	●	—	—	—	
Solid state switch	—	Grommet	Yes	3 wire (NPN)	24V	5V, 12V	—	**H7A1**	**F7NV**	**F79**	●	●	○	—	IC	Relay PLC
				3 wire (PNP)				**H7A2**	**F7PV**	**F7P**	●	●	○	—		
				2 wire		12V	—	**H7B**	**F7BV**	**J79**	●	●	○	—	—	
		Connector						**H7C**	**J79C**	—	●	●	●	●		
	Diagnostic indication (2 colour)	Grommet		3 wire (NPN)		5V, 12V	—	**H7NW**	**F7NWV**	**F79W**	●	●	○	—	IC	
				3 wire (PNP)				**H7PW**	—	**F7PW**	●	●	○	—		
				2 wire		12V		**H7BW**	**H7BWV**	**J79W**	●	●	○	—	—	
	Water resistant (2 colour)							**H7BA**	—	**F7BA**	—	●	○	—		
	With timer			3 wire (NPN)		5V, 12V		—	—	**F7NT**	—	●	○	—	IC	
	With diagnostic output (2 colour)			4 wire (NPN)				**H7NF**	—	**F79F**	●	●	○	—		
	Latch with diagnostic output (2 colour)					—		**H7LF**	—	**F7LF**	●	●	○	—	—	

∗ Lead wire length 0.5m·····— e.g.) C73C 5m·····Z e.g.) C73CZ
3m·····L C73CL None·····N C73CN

∗ Solid state switches marked with" ○ " are manufactured upon receipt of order.

∗∗ "D-A79W" cannot be mounted on bore size ø10 cylinder with air cushion.

Part No. of Cylinder with Built-in Magnet

Symbol "-A" (rail mounting) or "-B" (band mounting) should be suffixed to the part No. of the cylinder with auto switch.

Ex.	Rail mounting	CDJ2KB16-60S-A
	Band mounting	CDJ2KB10-45S-B

A cylinder in which the rod does not rotate because of its hexagonal shape.

Non-rotating accuracy
ø10: ±1.5°, ø16: ±1°
Can operate without lubrication.
Auto switch can also be mounted.
It can be equipped with auto switches to simplify the detection of the stroke position of the cylinder.

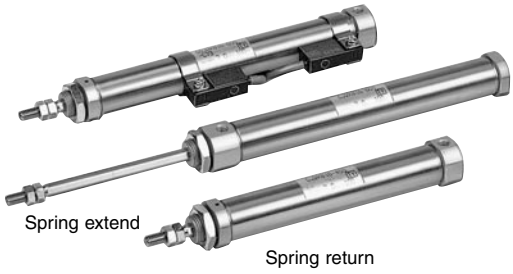

JIS symbol

Single acting/ Spring return

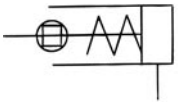

Single acting/ Spring extend

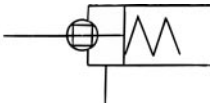

⚠ Precautions

⚠ Caution

Mounting

① During installation, secure the rod cover and tighten by applying an appropriate tightening force to the retaining nut or to the rod cover body. If the head cover is secured or the head cover body is tightened, the cover could rotate, leading to a deviation.
② Tighten the retaining screws to an appropriate tightening torque within the range given below.
ø10: 10.8 to 11.8Nm, ø16: 20 to 21Nm
③ In the case of the single acting cylinder, do not operate it in such a way that a load would be applied during the retraction of the piston rod of the spring return style, or during the extension of the piston rod of the spring extend style. The spring that is built into the cylinder provides only enough force to retract the piston rod. Thus, if a load is applied, the piston rod will not be able to retract to the end of the stroke.
④ In the case of the single acting cylinder, a breather hole is provided in the cover surface. Make sure not to block this hole during installation, as this could lead to a malfunction.
⑤ In the case of the non-rotating cylinder, do not operate it in such a way that rotational torque would be applied to the piston rod. If rotational torque is applied, the non-rotating guide will become deformed, thus affecting the non-rotating accuracy. (Refer to p.1-52)
⑥ To screw a bracket or a nut onto the threaded portion at the tip of the piston rod by placing a wrench over the parallel section of the piston rod, make sure to retract the piston rod entirely, and use the portion of the rod that protrudes. To tighten, take precautions to prevent the tightening torque from being applied to the non-rotating guide. (Refer to p.1-52)
⑦ To remove and install the snap ring for the knuckle pin or the clevis pin, use an appropriate pair of pliers (tool for installing a C snap ring). In particular, use a pair of ultra-mini pliers such as the Super Tool CSM-07A for removing and installing the snap rings on the ø10 cylinder.
⑧ In the case of auto switch rail mounting, do not remove the rail that is mounted. Because the retaining screws extend into the cylinder, this could lead to an air leak.

Specifications

Action		Single acting/Spring return	Single acting/Spring extend
Fluid		Air	
Proof pressure		1.05MPa	
Max. operating pressure		0.7MPa	
Min. operating pressure		0.15MPa	
Ambient and fluid temperature		Without auto switch: −10°C to 70°C, With auto switch: −10°C to 60°C*	
Cushion		Rubber bumper (Standard equipment)	
Lubrication		Non-lube	
Thread tolerance		JIS class 2	
Stroke tolerance		$^{+1.0}_{0}$	
Non-rotating accuracy	ø10	±1.5°	
	ø16	±1°	
Piston speed		50 to 750mm/s	
Allowable kinetic energy	ø10	0.035J	
	ø16	0.090J	

* No freezing

Standard Stroke (mm)

Bore size	Standard stroke
10	15, 30, 45, 60
16	15, 30, 45, 60, 75, 100, 125, 150

Spring Force (N)

Bore size (mm)	Extended position	Retracted position
10	6.86	3.53
16	14.2	6.86

Minimum Strokes for Auto Switches Mounting

•Refer to p.1-23

Mounting Accessories/Refer to p.1-32 for details.

	Mounting	Basic	Axial foot	Front flange	Double clevis*
Standard	Mounting nut	●	●	●	—
	Rod end nut	●	●	●	●
	Clevis pin	—	—	—	●
Option	Single knuckle joint	●	●	●	●
	Double knuckle joint*	●	●	●	●
	T bracket	—	—	—	●

* Double clevis or double knuckle joint is packaged with pins and rings.

Weight/Spring Return ( ): Spring extend

(g)

Bore size (mm)		10	16
Basic weight**	15 Stroke	28 (28)	63 (64)
	30 Stroke	35 (34)	80 (80)
	45 Stroke	44 (43)	102 (100)
	60 Stroke	53 (51)	124 (121)
	75 Stroke	—	145 (140)
	100 Stroke	—	188 (178)
	125 Stroke	—	224 (212)
	150 Stroke	—	250 (236)
Mounting bracket weight	Axial foot	20	20
	Front flange	15	15
	Double clevis* (with pins)	4	10

** This basic weight includes weights of mounting nut and rod end nut.
* The mounting nut is not attached to the double clevis style, so the mounting nut weight is already reduced.
Calculation example: CJ2KL10-45S
- Basic weight:·····44 (ø10-45 stroke)
- Mounting bracket weight:·····20 (Axial foot)
44 + 20 = 64g

Mounting Bracket Part No.

Mounting bracket	Bore size (mm)	
	10	16
Foot	CJ-L016B	CJK-L016B
Flange	CJ-F016B	CJK-F016B
T bracket*	CJ-T010B	CJ-T016B

* T mounting is used with double clevis (D).

Copper Free

20-CJ2K | Mounting | Bore size – Stroke | Action | Port location on head cover

- Copper free

To eliminate influences of copper ions or halogen ions during CRT manufacturing processes, copper and fluorine materials are not used as component parts.

Specifications

Action	Single acting/Spring return, Spring extend
Fluid	Air
Bore size (mm)	ø10, ø16
Max. operating pressure	0.7MPa
Min. operating pressure	0.15MPa
Cushion	Rubber bumper (standard equipment)
Rod non-rotating accuracy	ø10: ±1.5°, ø16: ±1°
Standard stroke (mm)	Same as the standard
Auto switch	Possible to be mounted
Mounting	Basic, Axial foot, Front flange, Double clevis

Auto Switch Mounting Bracket Part No. (Band mounting)

Bore size (mm)	Bracket part No.	Note
10	BJ2-010	Common use to all of D-C7, C8 and D-H7
16	BJ2-016	

Note) A set of stainless steel mounting screws "BBA4" is attached. (A switch mounting band is not attached. Please order the band separately.) "BBA4" screws are used for D-C7/C8/H7. "D-H7BAL" switch is set on the cylinder with the screws above when shipped.

Construction (The cylinder cannot be disassembled.)

Single acting/Spring return

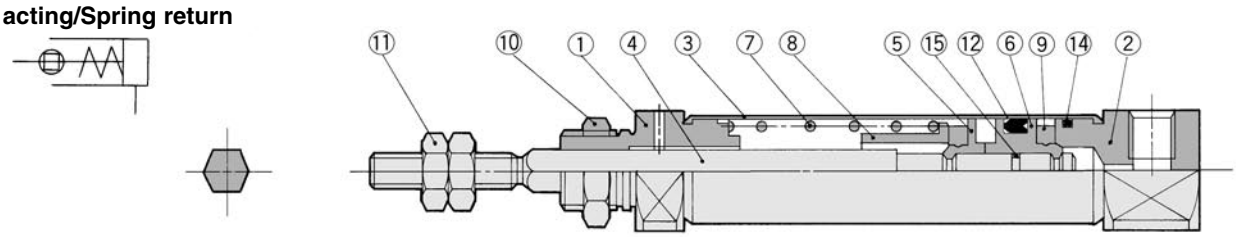

Single acting/Spring extend

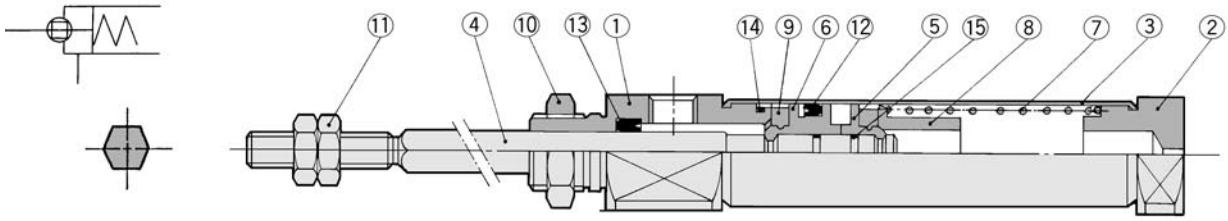

Component Parts

No.	Description	Material	Note
①	Rod cover	Aluminum alloy	White anodized
②	Head cover	Aluminum alloy	White anodized
③	Cylinder tube	Stainless steel	
④	Piston rod	Stainless steel	
⑤	Piston A	Brass	
⑥	Piston B	Brass	
⑦	Return spring	Piano wire	
⑧	Spring seat	Brass	

No.	Description	Material	Note
⑨	Bumper	Urethane	
⑩	Mounting nut	Brass	Nickel plated
⑪	Rod end nut	Rolled steel	Nickel plated
⑫	Piston seal	NBR	
⑬	Rod seal	NBR	
⑭	Tube gasket	NBR	
⑮	Piston gasket	NBR	

Single Acting/Spring Return: Basic (B)

CJ2KB Bore size – Stroke **S** Port location on head cover

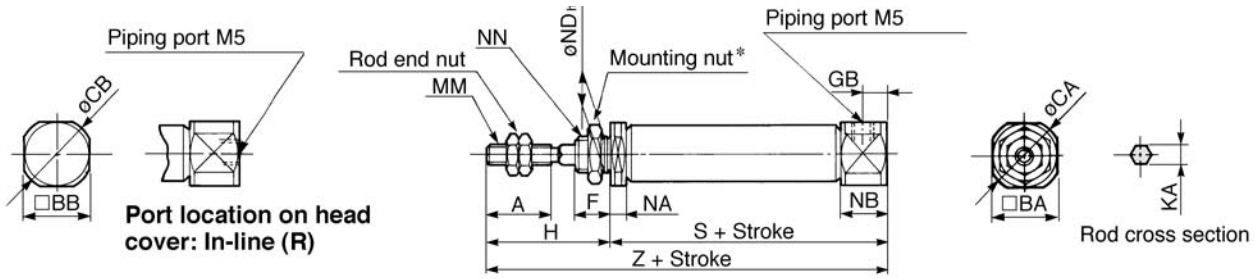

* Refer to p.1-32 for details of the mounting nut. (SNJ-016B for ø10, SNKJ-016B for ø16)

(mm)

Bore	A	BA	BB	CA	CB	F	GB	H	KA	MM	NA	NB	NDh8	NN
10	15	15	12	17	14	8	5	28	4.2	M4	5.5	9.5	$10^{0}_{-0.022}$	M10 X 1.0
16	15	18	18	20	20	8	5	28	5.2	M5	5.5	9.5	$12^{0}_{-0.027}$	M12 X 1.0

Dimensions by stroke

Bore \ Symbol / Stroke	S								Z							
	5 to 15	16 to 30	31 to 45	46 to 60	61 to 75	76 to 100	101 to 125	126 to 150	5 to 15	16 to 30	31 to 45	46 to 60	61 to 75	76 to 100	101 to 125	126 to 150
10	45.5	53	65	77	—	—	—	—	73.5	81	93	105	—	—	—	—
16	45.5	54	66	78	84	108	126	138	73.5	82	94	106	112	136	154	166

Single Acting/Spring Return: Axial Foot (L)

CJ2KL Bore size – Stroke **S** Port location on head cover

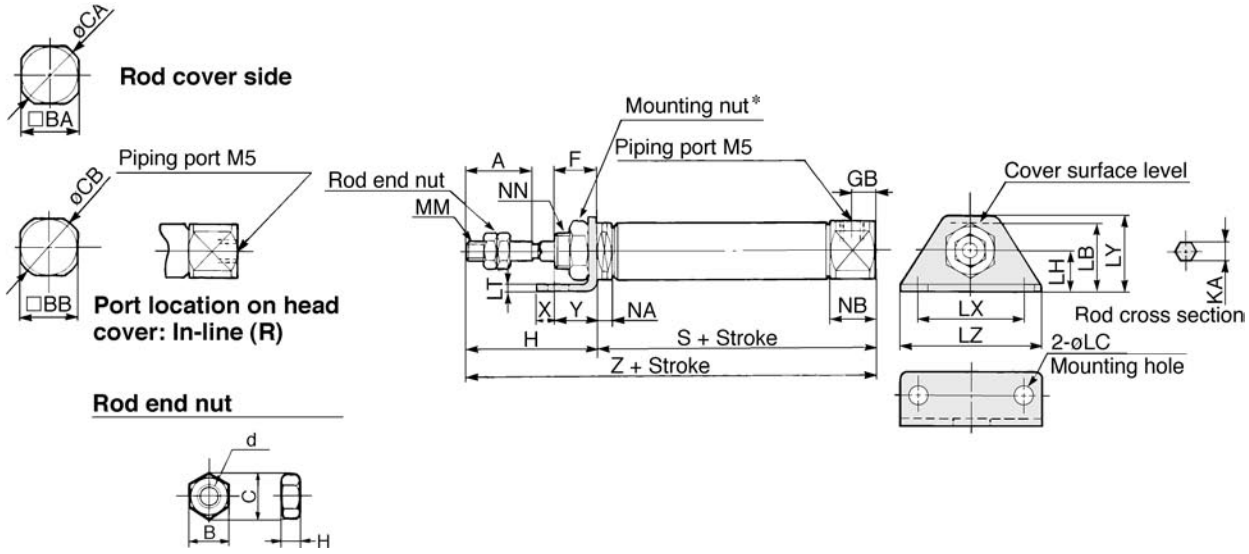

Material: Iron

Part No.	Bore	B	C	d	H
NTJ-010A	**10**	7	8.1	M4	3.2
NTJ-015A	**16**	8	9.2	M5	4

* Refer to p.1-32 for details of the mounting nut. (SNJ-016B for ø10, SNKJ-016B for ø16)

(mm)

Bore	A	BA	BB	CA	CB	F	GB	H	KA	LB	LC	LH	LT	LX	LY	LZ	MM	NA	NB	NN	X	Y
10	15	15	12	17	14	8	5	28	4.2	21.5	5.5	14	2.3	33	25	42	M4	5.5	9.5	M10 X 1.0	6	9
16	15	18	18	20	20	8	5	28	5.2	23	5.5	14	2.3	33	25	42	M5	5.5	9.5	M12 X 1.0	6	9

Dimensions by stroke

Bore \ Symbol / Stroke	S								Z							
	5 to 15	16 to 30	31 to 45	46 to 60	61 to 75	76 to 100	101 to 125	126 to 150	5 to 15	16 to 30	31 to 45	46 to 60	61 to 75	76 to 100	10 to 125	126 to 150
10	45.5	53	65	77	—	—	—	—	73.5	81	93	105	—	—	—	—
16	45.5	54	66	78	84	108	126	138	73.5	82	94	106	112	136	154	166

Single Acting/Spring Return: Front Flange (F)

CJ2KF Bore size – Stroke S Port location on head cover

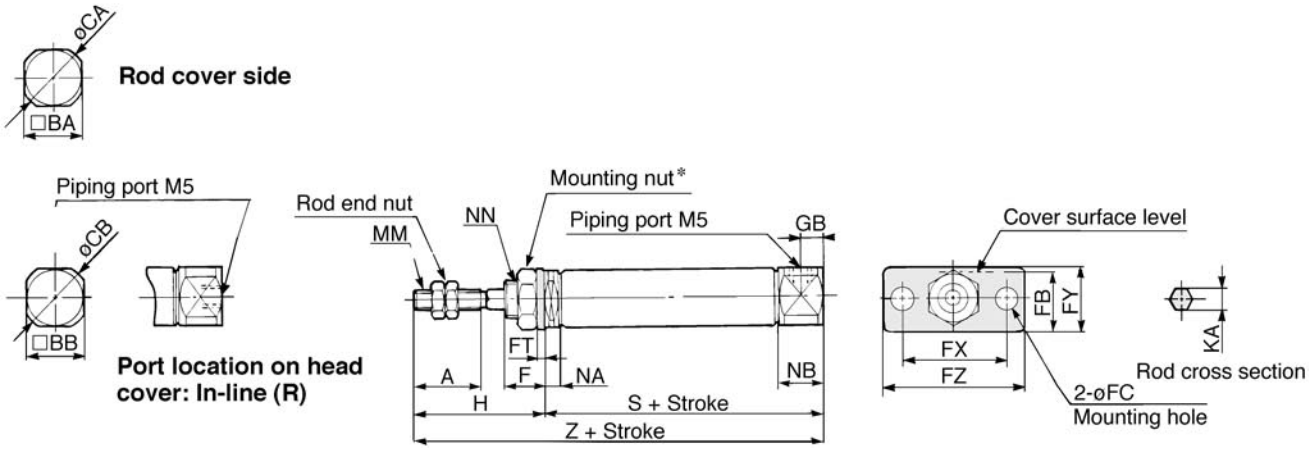

∗ Refer to p.1-32 for details of the mounting nut. (SNJ-016B for ø10, SNKJ-016B for ø16)

(mm)

Bore	A	BA	BB	CA	CB	F	FB	FC	FT	FX	FY	FZ	GB	H	KA	MM	NA	NB	NN
10	15	15	12	17	14	8	17.5	5.5	2.3	33	20	42	5	28	4.2	M4	5.5	9.5	M10 X 1.0
16	15	18	18	20	20	8	19	5.5	2.3	33	20	42	5	28	5.2	M5	5.5	9.5	M12 X 1.0

Dimensions by stroke

Bore \ Symbol / Stroke	S								Z							
	5 to 15	16 to 30	31 to 45	46 to 60	61 to 75	76 to 100	101 to 125	126 to 150	5 to 15	16 to 30	31 to 45	46 to 60	61 to 75	76 to 100	101 to 125	126 to 150
10	45.5	53	65	77	–	–	–	–	73.5	81	93	105	–	–	–	–
16	45.5	54	66	78	84	108	126	138	73.5	82	94	106	112	136	154	166

Single Acting/Spring Return: Double Clevis (D)

CJ2KD Bore size – Stroke S

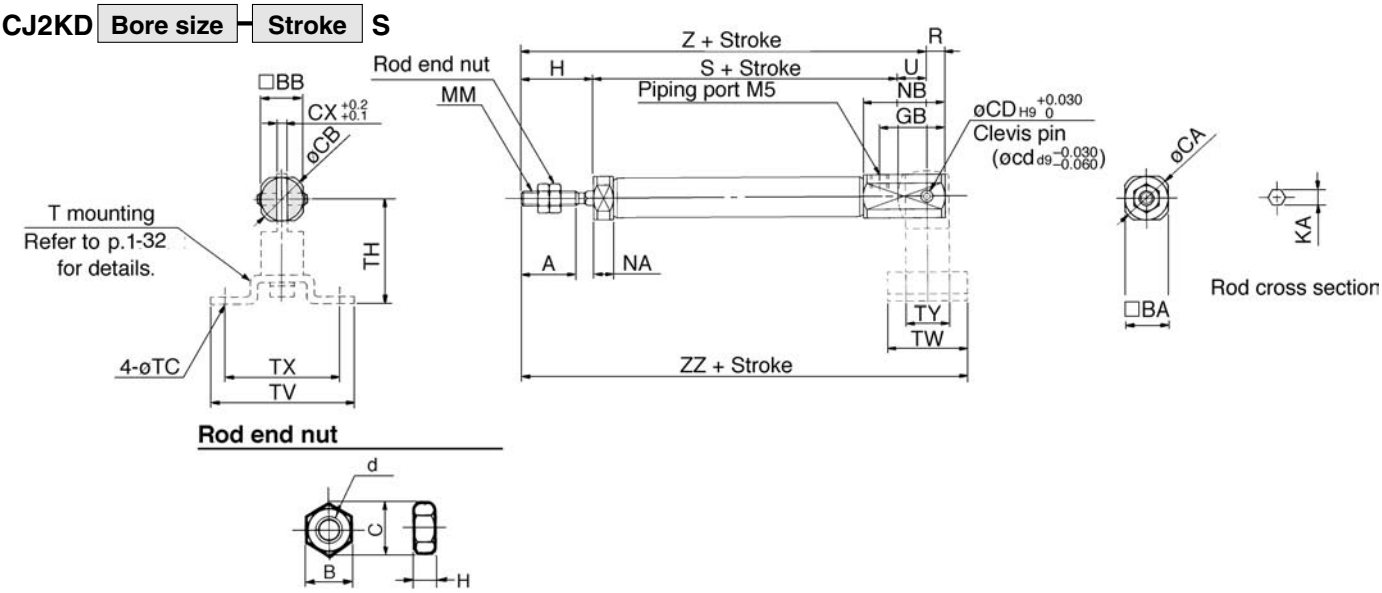

∗ Clevis pins and set rings are attached.

(mm)

Bore	A	BA	BB	CA	CB	CD(cd)	CX	GB	H	KA	MM	NA	NB	R	U
10	15	12	12	14	14	3.3	3.2	18	20	4.2	M4	5.5	22.5	5	8
16	15	18	18	20	20	5	6.5	23	20	5.2	M5	5.5	27.5	8	10

Material: Iron

Part No.	Bore	B	C	d	H
NTJ-010A	**10**	7	8.1	M4	3.2
NTJ-015A	**16**	8	9.2	M5	4

Dimensions by stroke

(mm)

Bore \ Symbol / Stroke	S								Z								ZZ							
	5 to 15	16 to 30	31 to 45	46 to 60	61 to 75	76 to 100	101 to 125	126 to 150	5 to 15	16 to 30	31 to 45	46 to 60	61 to 75	76 to 100	101 to 125	126 to 150	5 to 15	16 to 30	31 to 45	46 to 60	61 to 75	76 to 100	101 to 125	126 to 150
10	45.5	53	65	77	—	—	—	—	73.5	81	93	105	—	—	—	—	84.5	92	104	116	—	—	—	—
16	45.5	54	66	78	84	108	126	138	75.5	84	96	108	114	138	156	168	89.5	98	110	122	128	152	170	182

T mounting dimensions

Bore	TC	TH	TV	TW	TX	TY
10	4.5	29	40	22	32	12
16	5.5	35	48	28	38	16

Single Acting/Spring Extend: Basic (B)

CJ2KB Bore size – Stroke **T**

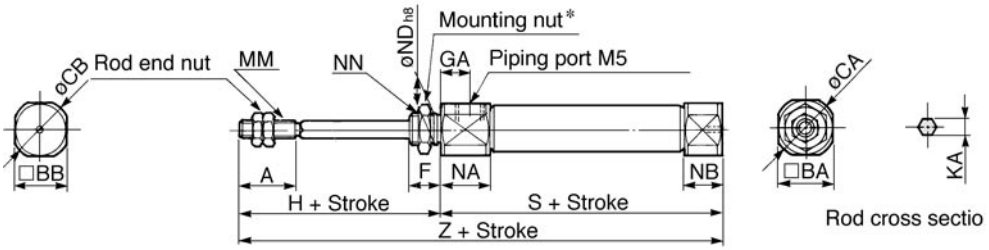

∗ Refer to p.1-32 for details of the mounting nut. (SNJ-016B for ø10, SNKJ-016B for ø16) (mm)

Bore	A	BA	BB	CA	CB	F	GA	H	KA	MM	NA	NB	NDh8	NN
10	15	15	12	17	14	8	8	28	4.2	M4	12.5	5.5	$10^{0}_{-0.022}$	M10 X 1.0
16	15	18	18	20	20	8	8	28	5.2	M5	12.5	5.5	$12^{0}_{-0.027}$	M12 X 1.0

Dimensions by stroke

Bore \ Symbol / Stroke	S								Z							
	5 to 15	16 to 30	31 to 45	46 to 60	61 to 75	76 to 100	101 to 125	126 to 150	5 to 15	16 to 30	31 to 45	46 to 60	61 to 75	76 to 100	101 to 125	126 to 150
10	48.5	56	68	80	—	—	—	—	76.5	84	96	108	—	—	—	—
16	48.5	57	69	81	87	111	129	141	76.5	85	97	109	115	139	157	169

Single Acting/Spring Extend: Axial Foot (T)

CJ2KL Bore size – Stroke **T**

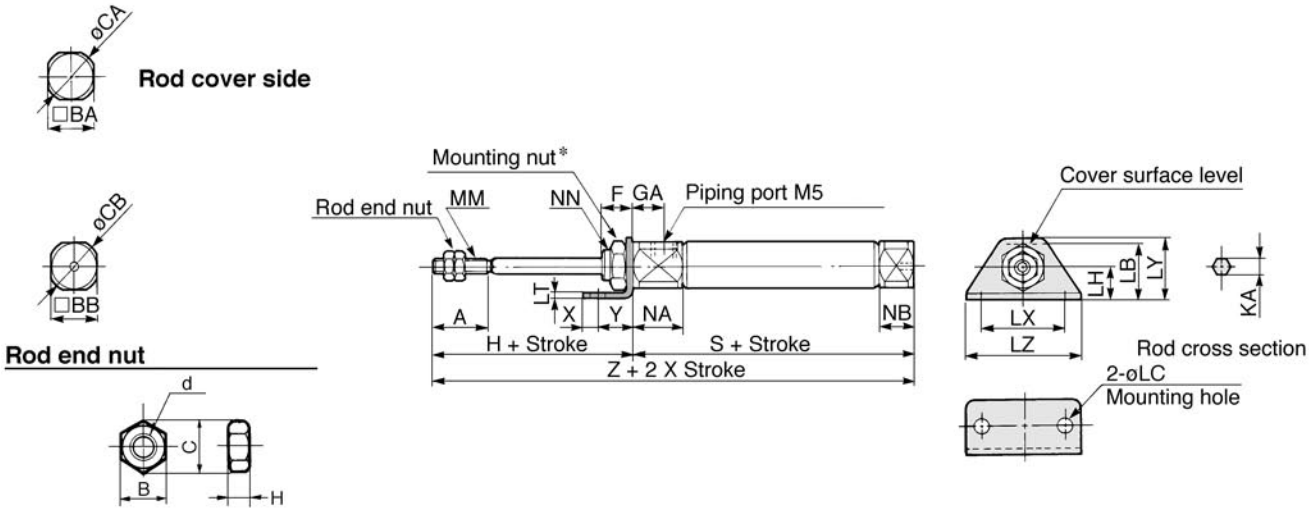

Material: Iron

Part No.	Bore	B	C	d	H
NTJ-010A	**10**	7	8.1	M4	3.2
NTJ-015A	**16**	8	9.2	M5	4

∗ Refer to p.1-32 for details of the mounting nut. (SNJ-016B for ø10, SNKJ-016B for ø16) (mm)

Bore	A	BA	BB	CA	CB	F	GA	H	KA	LB	LC	LH	LT	LX	LY	LZ	MM	NA	NB	NN	X	Y
10	15	15	12	17	14	8	8	28	4.2	21.5	5.5	14	2.3	33	25	42	M4	12.5	5.5	M10 X 1.0	6	9
16	15	18	18	20	20	8	8	28	5.2	23	5.5	14	2.3	33	25	42	M5	12.5	5.5	M12 X 1.0	6	9

Dimensions by stroke

Bore \ Symbol / Stroke	S								Z							
	5 to 15	16 to 30	31 to 45	46 to 60	61 to 75	76 to 100	101 to 125	126 to 150	5 to 15	16 to 30	31 to 45	46 to 60	61 to 75	76 to 100	101 to 125	126 to 150
10	48.5	56	68	80	—	—	—	—	76.5	84	96	108	—	—	—	—
16	48.5	57	69	81	87	111	129	141	76.5	85	97	109	115	139	157	169

Single Acting/Spring Extend: Front Flange (F)

CJ2KF Bore size – Stroke **T**

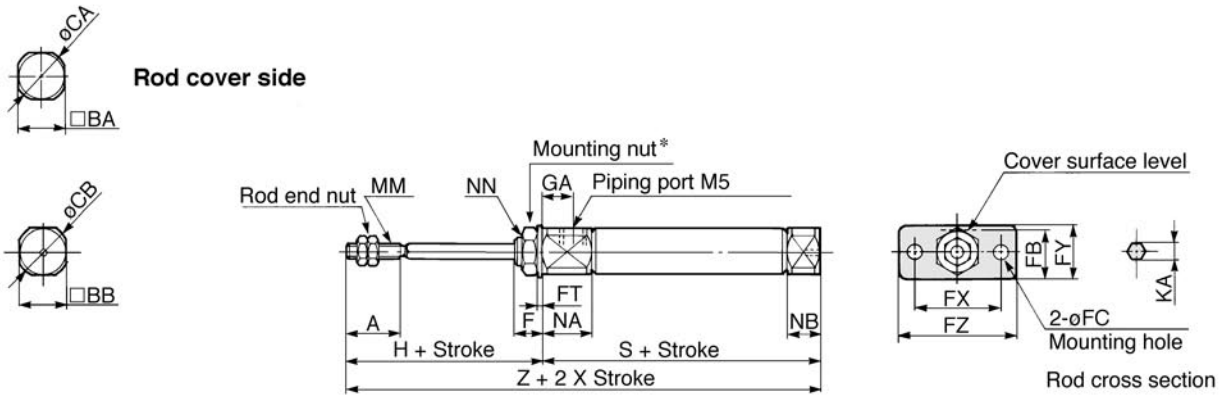

∗ Refer to p.1-32 for details of the mounting nut. (SNJ-016B for ø10, SNKJ-016B for ø16)

(mm)

Bore	A	BA	BB	CA	CB	F	FB	FC	FT	FX	FY	FZ	GA	H	KA	MM	NA	NB	NN
10	15	15	12	17	14	8	17.5	5.5	2.3	33	20	42	8	28	4.2	M4	12.5	5.5	M10 X 1.0
16	15	18	18	20	20	8	19	5.5	2.3	33	20	42	8	28	5.2	M5	12.5	5.5	M12 X 1.0

Dimensions by stroke

Bore \ Symbol / Stroke	S								Z							
	5 to 15	16 to 30	31 to 45	46 to 60	61 to 75	76 to 100	101 to 125	126 to 150	5 to 15	16 to 30	31 to 45	46 to 60	61 to 75	76 to 100	101 to 125	126 to 150
10	48.5	56	68	80	–	–	–	–	76.5	84	96	108	–	–	–	–
16	48.5	57	69	81	87	111	129	141	76.5	85	97	109	115	139	157	169

Single Acting/Spring Extend: Double Clevis (D)

CJ2KD Bore size – Stroke **T**

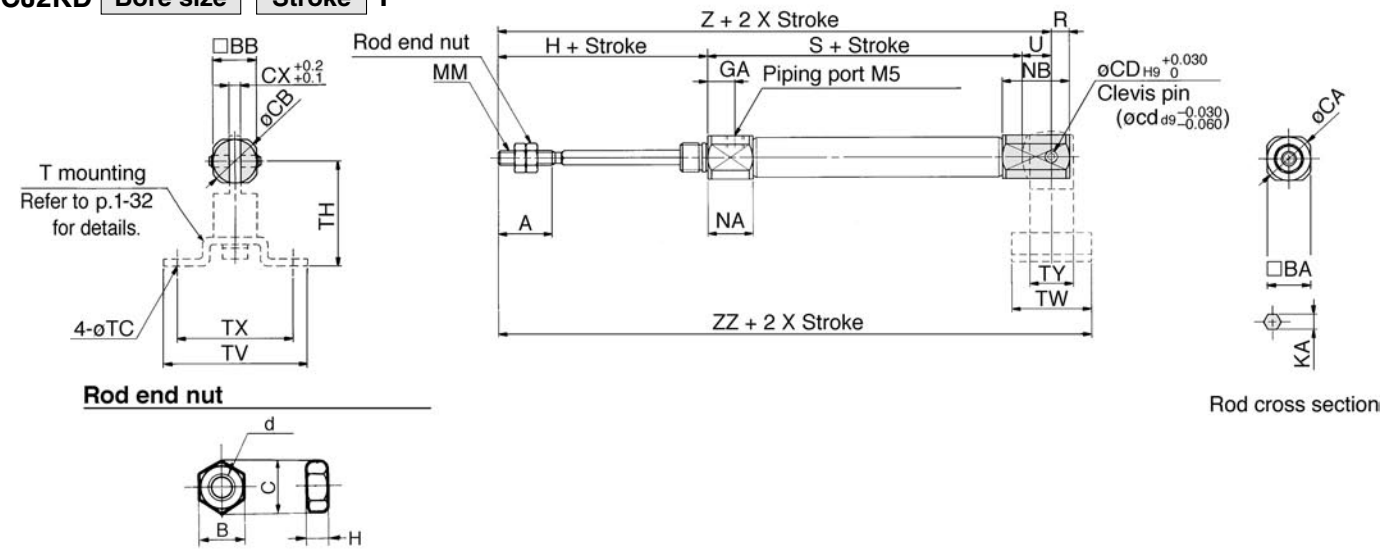

∗ Clevis pins and set rings are attached.

(mm)

Bore	A	BA	BB	CA	CB	CD(cd)	CX	GA	H	KA	MM	NA	NB	R	U
10	15	15	12	17	14	3.3	3.2	8	28	4.2	M4	12.5	18.5	5	8
16	15	18	18	20	20	5	6.5	8	28	5.2	M5	12.5	23.5	8	10

Material: Iron

Part No.	Bore	B	C	d	H
NTJ-010A	**10**	7	8.1	M4	3.2
NTJ-015A	**16**	8	9.2	M5	4

Dimensions by stroke

(mm)

Bore \ Symbol / Stroke	S								Z								ZZ							
	5 to 15	16 to 30	31 to 45	46 to 60	61 to 75	76 to 100	101 to 125	126 to 150	5 to 15	16 to 30	31 to 45	46 to 60	61 to 75	76 to 100	101 to 125	126 to 150	5 to 15	16 to 30	31 to 45	46 to 60	61 to 75	76 to 100	101 to 125	126 to 150
10	48.5	56	68	80	–	–	–	–	84.5	92	104	116	–	–	–	–	95.5	103	115	127	–	–	–	–
16	48.5	57	69	81	87	111	129	141	86.5	95	107	119	125	149	167	179	100.5	109	121	133	139	163	181	193

T mounting dimensions

Bore	TC	TH	TV	TW	TX	TY
10	4.5	29	40	22	32	12
16	5.5	35	48	28	38	16

Built-in Speed Controller: Double Acting Single Rod

Series CJ2Z

ø10, ø16

How to Order

Bore size

10	10mm
16	16mm

Mounting

B	Basic
L	Axial foot
F	Front flange
D	Double clevis

Standard stroke (mm)

ø10	15, 30, 45, 60, 75, 100, 125, 150
ø16	15, 30, 45, 60, 75, 100, 125, 150, 175, 200

Standard CJ2Z [L] [16] — [60] [ ]

With auto switch CDJ2Z [L] [16] — [60] [ ] — [C73] [ ]

Band mounting

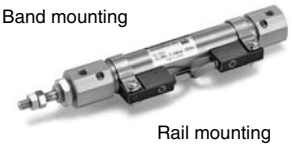

Rail mounting

With auto switch
(Built-in magnet)

Port location on head cover

Symbol	Port location
—	Perpendicular
R	In-line

∗ Refer to p.1-63 for the configuration.

Auto switch

∗ Refer to the table below for selecting applicable auto switches.

∗ If requiring a built-in-magnet cylinder without an auto switch, refer to the model number example below.

Number of switches

—	2
S	1
n	n

Applicable Auto Switches

Style	Special function	Electrical entry	Indicator	Wiring (Output)	Load voltage DC	Load voltage DC	Load voltage AC	Auto switch model** Band	Auto switch model** Rail Perp.	Auto switch model** Rail In-line	Lead wire* (m) 0.5 (—)	Lead wire* (m) 3 (L)	Lead wire* (m) 5 (Z)	Lead wire* (m) None (N)	Applicable load	Applicable load
Reed switch	—	Grommet	Yes	3 wire (NPN)	—	5V	—	**C76**	—	**A76H**	●	●	—	—	IC	—
				2 wire	—	—	200V	—	**A72**	**A72H**	●	●	—	—	—	Relay PLC
					24V	12V	100V	**C73**	**A73**	**A73H**	●	●	●	—		
			No			5V, 12V	≤100V	**C80**	**A80**	**A80H**	●	●	—	—	IC	
		Connector	Yes			12V	—	**C73C**	**A73C**	—	●	●	●	●	—	
			No			5V, 12V	≤24V	**C80C**	**A80C**	—	●	●	●	●	IC	
	Diagnostic indication (2 colour)	Grommet	Yes			—	—	—	**A79W**	—	●	●	—	—	—	
Solid state switch	—	Grommet	Yes	3 wire (NPN)	24V	5V, 12V	—	**H7A1**	**F7NV**	**F79**	●	●	○	—	IC	Relay PLC
				3 wire (PNP)				**H7A2**	**F7PV**	**F7P**	●	●	○	—		
				2 wire		12V	—	**H7B**	**F7BV**	**J79**	●	●	○	—	—	
		Connector						**H7C**	**J79C**	—	●	●	●	●		
	Diagnostic indication (2 colour)	Grommet		3 wire (NPN)		5V, 12V	—	**H7NW**	**F7NWV**	**F79W**	●	●	○	—	IC	
				3 wire (PNP)				**H7PW**	—	**F7PW**	●	●	○	—		
				2 wire		12V		**H7BW**	**H7BWV**	**J79W**	●	●	○	—	—	
	Water resistant (2 colour)							**H7BA**	—	**F7BA**	—	●	○	—		
	With timer			3 wire (NPN)		5V, 12V		—	—	**F7NT**	—	●	○	—	IC	
	With diagnostic output (2 colour)			4 wire (NPN)				**H7NF**	—	**F79F**	●	●	○	—		
	Latch with diagnostic output (2 colour)					—		**H7LF**	—	**F7LF**	●	●	○	—	—	

∗ Lead wire length 0.5m·····— e.g.) C73C 5m·····Z e.g.) C73CZ
3m·····L C73CL None·····N C73CN

∗ Solid state switches marked with" ○ " are manufactured upon receipt of order.

∗∗ "D-A79W" cannot be mounted on bore size ø10 cylinder with air cushion.

Part No. of Cylinder with Built-in Magnet

Symbol "-A" (rail mounting) or "-B" (band mounting) should be suffixed to the part No. of the cylinder with auto switch.

Ex.	Rail mounting	CDJ2ZB16-60-A
	Band mounting	CDJ2ZB10-45-B

Space saving air cylinder with built-in speed controller

Auto switch available

JIS symbol

Double acting/single rod

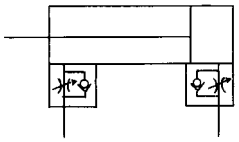

Port Location on Head Cover

Either perpendicular to the cylinder axis or in-line with the cylinder axis is available for basic style.

In-line

Perpendicular

Specifications

Action		Double acting/Single rod
Fluid		Air
Proof pressure		1.05MPa
Max. operating pressure		0.7MPa
Min. operating pressure		0.06MPa
Ambient and fluid temperature		Without auto switch: –10°C to 70°C, With auto switch: –10°C to 60°C*
Cushion		Rubber bumper (Standard equipment)
Lubrication		Non-lube
Thread tolerance		JIS class 2
Stroke tolerance		$^{+1.0}_{0}$
Speed controller		Built-in
Mounting		Basic, Axial foot, Front flange, Double clevis
Piston speed		50 to 750mm/s
Allowable kinetic energy	ø10	0.035J
	ø16	0.090J

∗ No freezing

Standard Stroke

(mm)

Bore size	Standard stroke
10	15, 30, 45, 60, 75, 100, 125, 150
16	15, 30, 45, 60, 75, 100, 125, 150, 175, 200

Minimum Strokes for Auto Switches Mounting

•Refer to p.1-23

Mounting Accessories/ Refer to p.1-32 for details.

Mounting		Basic	Axial foot	Front flange	Double clevis*
Standard	Mounting nut	●	●	●	—
	Rod end nut	●	●	●	●
	Clevis pin	—	—	—	●
Option	Single knuckle joint	●	●	●	●
	Double knuckle joint*	●	●	●	●
	T bracket	—	—	—	●

∗ Double clevis or double knuckle joint are packaged with pins and rings.

Weight

(g)

Bore size (mm)		10	16
Basic weight*		40	73
Additional weight for each 15 of stroke		4	6.5
Mounting bracket weight	Axial foot	8	20
	Front flange	5	15
	Double clevis** (with pins)	4	10

* This basic weight includes weights of mounting nut and rod end nut.
** The mounting nut is not attached to the double clevis style, so the mounting nut weight is already reduced.

Calculation example: CJ2ZL10-45
- Basic weight: 40 (ø10)
- Additional weight: 4/15 stroke
- Cylinder stroke: 45 stroke
- Mounting bracket weight: 8 (Axial foot)

40+4/15 X 45+8=60g

Mounting Bracket Part No.

Mounting bracket	Bore size (mm)	
	10	16
Foot	CJ-L010B	CJ-L016B
Flange	CJ-F010B	CJ-F016B
T bracket*	CJ-T010B	CJ-T016B

* T bracket is used with double clevis (D).

Auto Switch Mounting Bracket Part No. (Band mounting)

Bore size (mm)	Bracket part No.	Note
10	BJ2-010	Common use to all of D-C7, C8 and D-H7
16	BJ2-016	

Note) A set of stainless steel mounting screws "BBA4" is attached. (A switch mounting band is not attached. Please order the band separately.) "BBA4" screws are used for D-C7/C8/H7. "D-H7BAL" switch is set on the cylinder with the screws above when shipped. Also, when a switch only is shipped, "BBA4" screws are attached.

Copper Free

20-CJ2Z | **Mounting** | **Bore size** – **Stroke** | **Port location on head cover**

- Copper free

To eliminate influences of copper ions or halogen ions during CRT manufacturing processes, copper and fluorine materials are not used as component parts.

Specifications

Action	Double acting/Single rod
Bore size (mm)	ø10, ø16
Max. operating pressure	0.7MPa
Min. operating pressure	0.06MPa
Cushion	Rubber bumper (standard equipment)
Standard stroke (mm)	Same as the standard
Auto switch	Possible to be mounted
Mounting	Basic, Axial foot, Front flange, Double clevis

Construction (The cylinder cannot be disassembled)

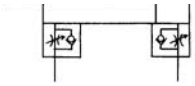

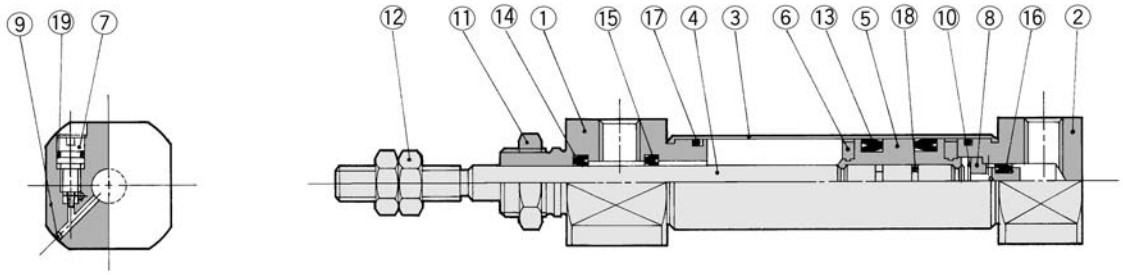

Component Parts

No.	Description	Material	Note
①	Rod cover	Aluminum alloy	White anodized
②	Head cover	Aluminum alloy	White anodized
③	Cylinder tube	Stainless steel	
④	Piston rod	Stainless steel	
⑤	Piston	Brass	
⑥	Bumper	Urethane	
⑦	Speed controller needle	Stainless steel	
⑧	Check packing sleeve	Brass	
⑨	Steel ball	Bearing steel	
⑩	Retaining ring	Carbon tool steel	Black zinc chromated

No.	Description	Material	Note
⑪	Mounting nut	Brass	Nickel plated
⑫	Rod end nut	Rolled steel	Nickel plated
⑬	Piston seal	NBR	
⑭	Rod seal	NBR	
⑮	Check seal A	NBR	
⑯	Check seal B	NBR	
⑰	Tube gasket	NBR	
⑱	Piston gasket	NBR	
⑲	Needle seal	NBR	

Basic (B)

CJ2ZB Bore size – Stroke Port location on head cover

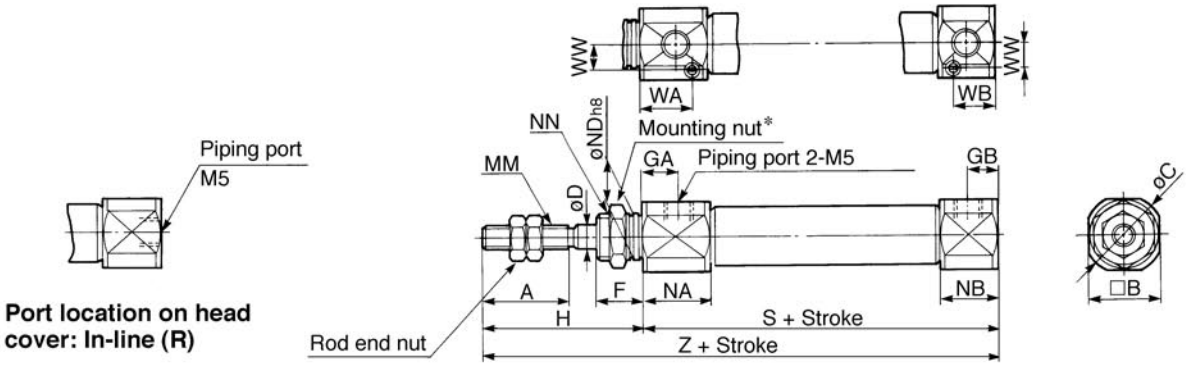

∗ Refer to p.1-32 for details of the mounting nut. (mm)

Bore	A	B	C	D	F	GA	GB	H	MM	NA	NB	NDh8	NN	WA	WB	WW	S	Z
10	15	15	17	4	8	7.5	6.5	28	M4	21	18	$8^{0}_{-0.022}$	M8 X 1.0	14.5	13.5	4.5	63	91
16	15	18	20	5	8	7.5	6.5	28	M5	21	18	$10^{0}_{-0.022}$	M10 X 1.0	14.5	13.5	5.5	64	92

Axial Foot (L)

CJ2ZL Bore size – Stroke Port location on head cover

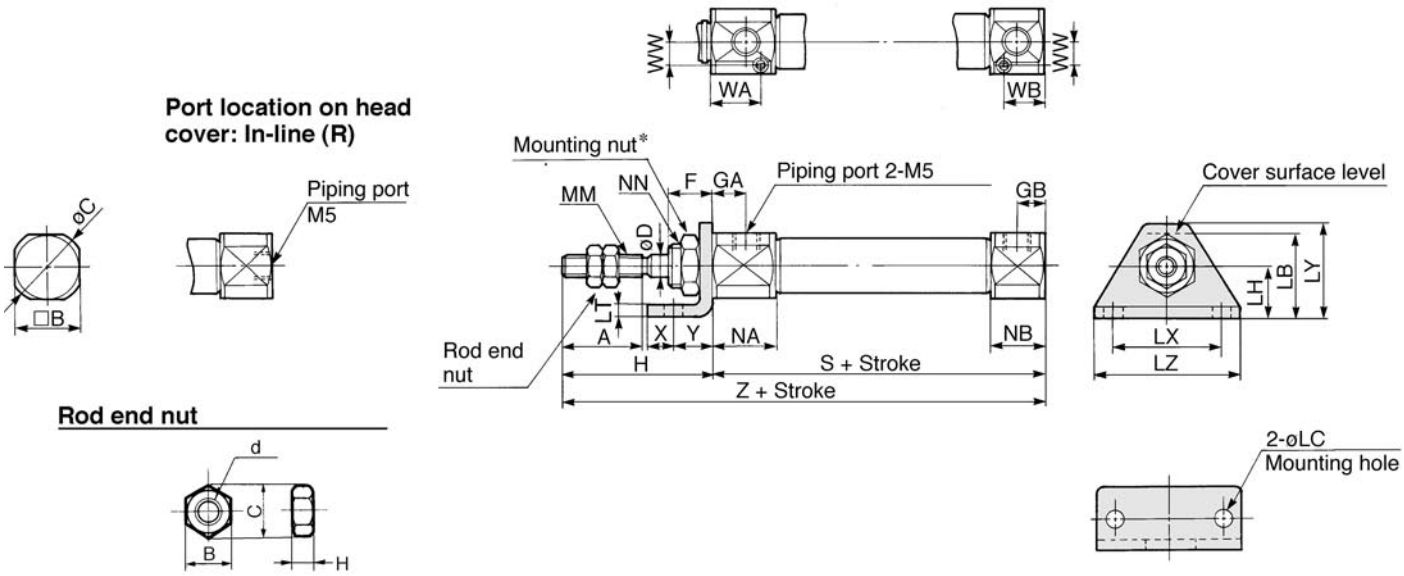

Material: Iron

Part No.	Bore	B	C	d	H
NTJ-010A	**10**	7	8.1	M4	3.2
NTJ-015A	**16**	8	9.2	M5	4

∗ Refer to p.1-32 for details of the mounting nut. (mm)

Bore	A	B	C	D	F	GA	GB	H	LB	LC	LH	LT	LX	LY	LZ	MM	NA	NB	NN	S	WA	WB	WW	X	Y	Z
10	15	15	17	4	8	7.5	6.5	28	16.5	4.5	9	1.6	24	16.5	32	M4	21	18	M8 X 1.0	63	14.5	13.5	4.5	5	7	91
16	15	18	20	5	8	7.5	6.5	28	23	5.5	14	2.3	33	25	42	M5	21	18	M10 X 1.0	64	14.5	13.5	5.5	6	9	92

Front Flange (F)

CJ2ZF | Bore size | – | Stroke | Port location on head cover |

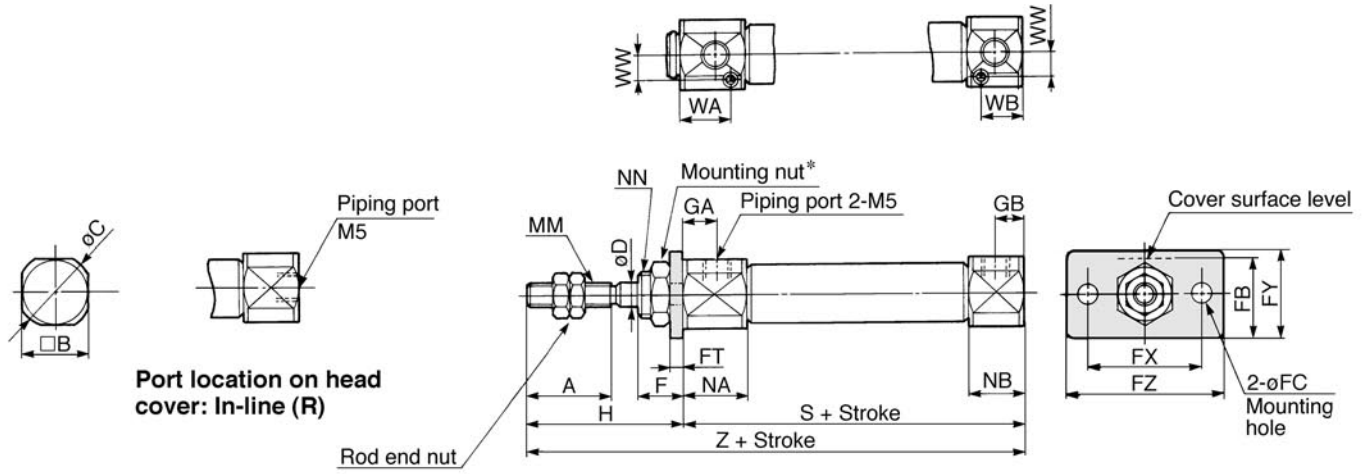

∗ Refer to p.1-32 for details of the mounting nut. (mm)

Bore	A	B	C	D	F	FB	FC	FT	FX	FY	FZ	GA	GB	H	MM	NA	NB	NN	WA	WB	WW	S	Z
10	15	15	17	4	8	14.5	4.5	1.6	24	14	32	7.5	6.5	28	M4	21	18	M8 X 1.0	14.5	13.5	4.5	63	91
16	15	18	20	5	8	19	5.5	2.3	33	20	42	7.5	6.5	28	M5	21	18	M10 X 1.0	14.5	13.5	5.5	64	92

Double Clevis (D)

CJ2ZD | Bore size | – | Stroke |

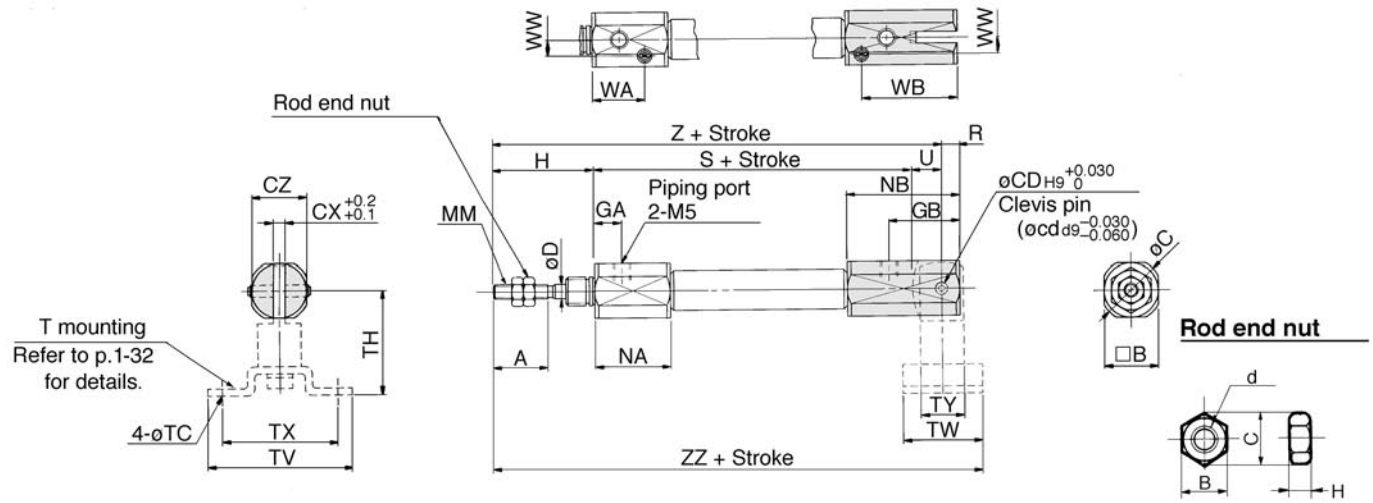

Material: Iron

Part No.	Bore	B	C	d	H
NTJ-010A	**10**	7	8.1	M4	3.2
NTJ-015A	**16**	8	9.2	M5	4

∗ Clevis pins and set rings are attached.

Material: Iron

Bore	A	B	C	CD(cd)	CX	CZ	D	GA	GB	H	MM	NA	NB	R	S	U	WA	WB	WW	Z	ZZ
10	15	15	17	3.3	3.2	15	4	7.5	19.5	28	M4	21	31	5	63	8	14.5	26.5	4.5	99	110
16	15	18	20	5	6.5	18	5	7.5	24.5	28	M5	21	36	8	64	10	14.5	31.5	5.5	102	116

T mounting dimensions

(mm)

Bore	TC	TH	TV	TW	TX	TY
10	4.5	29	40	22	32	12
16	5.5	35	48	28	38	16

Built-in Speed Controller: Double Acting Double Rod

Series CJ2ZW

ø10, ø16

How to Order

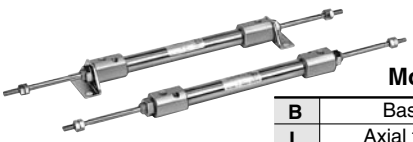

Bore size

10	10mm
16	16mm

Mounting

B	Basic
L	Axial foot
F	Front flange

Standard stroke (mm)

ø10	15, 30, 45, 60
ø16	15, 30, 45, 60

Standard CJ2ZW L 16 — 45

With auto switch CDJ2ZW L 16 — 45 — C73 ☐

With auto switch
(Built-in magnet)

Auto switch
∗ Refer to the table below for selecting applicable auto switches.
∗ If requiring a built-in-magnet cylinder without an auto switch, refer to the model number example below.

Number of switches

—	2
S	1
n	n

Applicable Auto Switches

Style	Special function	Electrical entry	Indicator	Wiring (Output)	Load voltage DC		Load voltage AC	Auto switch model** Band	Rail Perp.	Rail In-line	Lead wire* (m) 0.5 (—)	3 (L)	5 (Z)	None (N)	Applicable load	
Reed switch	—	Grommet	Yes	3 wire (NPN)	—	5V	—	**C76**	—	**A76H**	●	●	—	—	IC	—
				2 wire	—	—	200V	—	**A72**	**A72H**	●	●	—	—	—	Relay PLC
					24V	12V	100V	**C73**	**A73**	**A73H**	●	●	●	—		
			No			5V, 12V	≤100V	**C80**	**A80**	**A80H**	●	●	—	—	IC	
		Connector	Yes			12V	—	**C73C**	**A73C**	—	●	●	●	●	—	
			No			5V, 12V	≤24V	**C80C**	**A80C**	—	●	●	●	●	IC	
	Diagnostic indication (2 colour)	Grommet	Yes			—	—	—	**A79W**	—	●	●	—	—	—	
Solid state switch	—	Grommet	Yes	3 wire (NPN)	24V	5V, 12V	—	**H7A1**	**F7NV**	**F79**	●	●	○	—	IC	Relay PLC
				3 wire (PNP)				**H7A2**	**F7PV**	**F7P**	●	●	○	—		
				2 wire		12V	—	**H7B**	**F7BV**	**J79**	●	●	○	—	—	
		Connector						**H7C**	**J79C**	—	●	●	●	●		
	Diagnostic indication (2 colour)	Grommet		3 wire (NPN)		5V, 12V	—	**H7NW**	**F7NWV**	**F79W**	●	●	○	—	IC	
				3 wire (PNP)				**H7PW**	—	**F7PW**	●	●	○	—		
				2 wire		12V		**H7BW**	**H7BWV**	**J79W**	●	●	○	—	—	
	Water resistant (2 colour)							**H7BA**	—	**F7BA**	—	●	○	—		
	With timer			3 wire (NPN)		5V, 12V		—	—	**F7NT**	—	●	○	—	IC	
	With diagnostic output (2 colour)			4 wire (NPN)				**H7NF**	—	**F79F**	●	●	○	—		
	Latch with diagnostic output (2 colour)					—		**H7LF**	—	**F7LF**	●	●	○	—	—	

∗ Lead wire length 0.5m·····— e.g.) C73C 5m·····Z e.g.) C73CZ
3m·····L C73CL None·····N C73CN

∗ Solid state switches marked with" ○ " are manufactured upon receipt of order.

∗∗ "D-A79W" cannot be mounted on bore size Ø10 cylinder with air cushion.

Part No. of Cylinder with Built-in Magnet

Symbol "-A" (rail mounting) or "-B" (band mounting) should be suffixed to the part No. of the cylinder with auto switch.

Ex.	Rail mounting	CDJ2ZWB16-60-A
	Band mounting	CDJ2ZWB10-45-B

Space saving air cylinder with built-in speed controller

Auto switch available

Specifications

Action		Double acting/Double rod
Fluid		Air
Proof pressure		1.05MPa
Max. operating pressure		0.7MPa
Min. operating pressure		0.1MPa
Ambient and fluid temperature		Without auto switch: −10°C to 70°C, With auto switch: −10°C to 60°C*
Cushion		Rubber bumper
Lubrication		Non-lube
Thread tolerance		JIS class 2
Stroke tolerance		$^{+1.0}_{0}$
Speed controller		Built-in
Mounting		Basic, Axial foot, Front flange
Piston speed		50 to 750mm/s
Allowable kinetic energy	ø10	0.035J
	ø16	0.090J

* No freezing

Standard Stroke (mm)

Bore size	Standard stroke
10	15, 30, 45, 60
16	15, 30, 45, 60

Minimum Strokes for Auto Switch Mounting

• Refer to p.1-23

JIS symbol

Double acting/Double rod

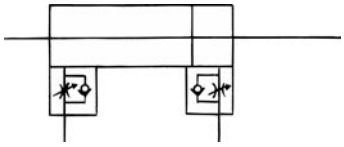

Mounting Accessories/ Refer to p.1-32 for details.

Mounting		Basic	Axial foot	Front flange
Standard	Mounting nut	●	●	●
	Rod end nut	●	●	●
Option	Single knuckle joint	●	●	●
	Double knuckle joint*	●	●	●

* Double clevis or double knuckle joint are packaged with pins and rings.

Mounting Bracket Part No.

Bracket	Bore size (mm)	
	10	**16**
Foot	CJ-L010B	CJ-L016B
Flange	CJ-F010B	CJ-F016B

Auto Switch Mounting Bracket Part No. (Band mounting)

Bore size (mm)	Bracket part No.	Note
10	BJ2-010	Common use to all of D-C7, C8 and D-H7
16	BJ2-016	

Weight

(g)

Bore size (mm)		10	16
Basic weight*		50	85
Additional weight for each 15 of stroke		6	9
Mounting bracket weight	Axial foot	16	40
	Front flange	5	15

* This basic weight includes weight of rod end nut.
Calculation example:
CJ2ZWL10-45
- Basic weight ····· 50 (ø10)
- Additional weight ····· 6/15 stroke
- Cylinder stroke ····· 45 stroke
- Mounting bracket weight ····· 16 (Axial foot)

50+6/15 X 45+16=84g

Copper Free

20-CJ2WZ | **Mounting** | **Bore size** – **Stroke** | **Port location on head cover**

- Copper free

To eliminate influences of copper ions or halogen ions during CRT manufacturing processes, copper and fluorine materials are not used as component parts.

Specifications

Action	Double acting/Double rod
Bore size (mm)	ø10, ø16
Max. operating pressure	0.7MPa
Min. operating pressure	0.1MPa
Cushion	Rubber bumper
Standard stroke (mm)	15, 30, 45, 60
Auto switch	Possible to be mounted
Mounting	Basic, Axial foot, Front flange

Construction (The cylinder cannot be disassembled.)

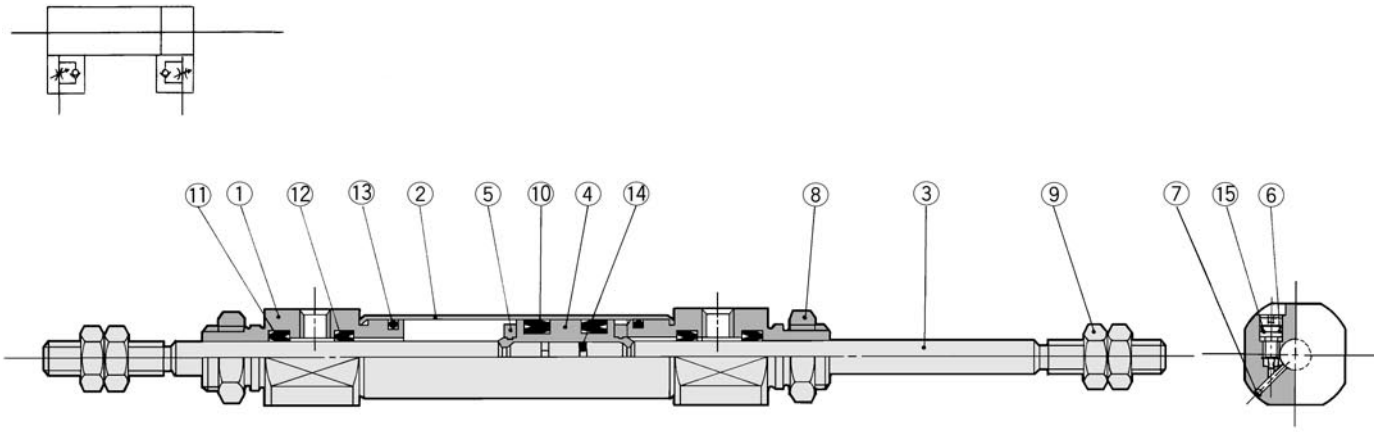

Component Parts

No.	Description	Material	Note
①	Rod cover	Aluminum alloy	White anodized
②	Cylinder tube	Stainless steel	
③	Piston rod	Stainless steel	
④	Piston	Brass	
⑤	Bumper	Urethane	
⑥	Speed controller needle	Stainless steel	
⑦	Steel ball	Bearing steel	
⑧	Mounting nut	Brass	Nickel plated

No.	Description	Material	Note
⑨	Rod end nut	Rolled steel	Nickel plated
⑩	Piston seal	NBR	
⑪	Rod seal	NBR	
⑫	Check seal	NBR	
⑬	Tube gasket	NBR	
⑭	Piston gasket	NBR	
⑮	Needle seal	NBR	

Basic (B)

CJ2ZWB Bore size – Stroke

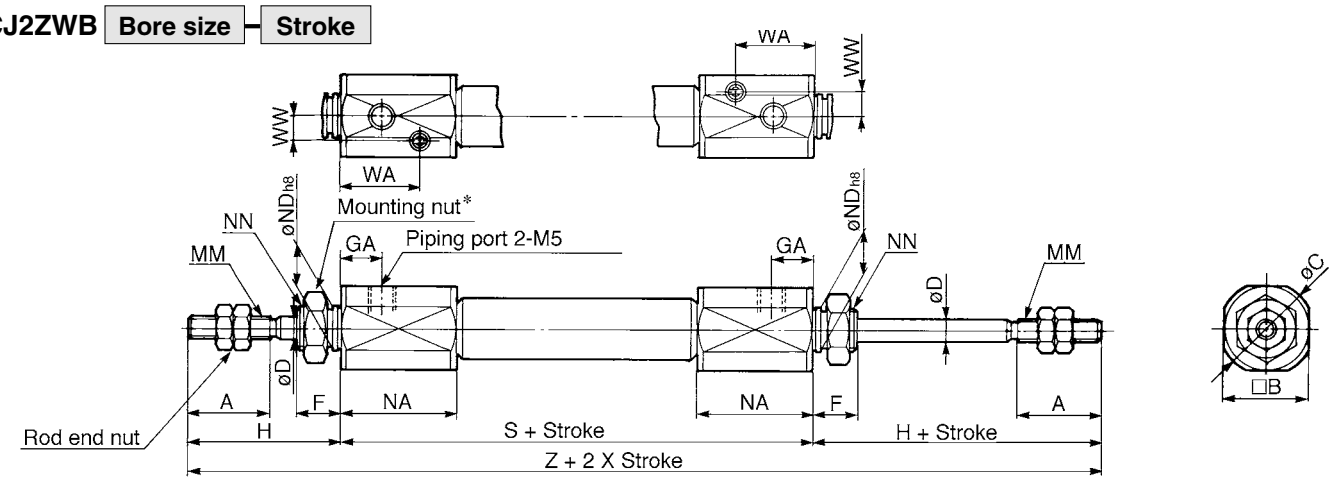

∗ Refer to p.1-32 for details of the mounting nut.

(mm)

Bore	A	B	C	D	F	GA	H	MM	NA	NDh8	NN	S	WA	WW	Z
10	15	15	17	4	8	7.5	28	M4	21	$8^{0}_{-0.022}$	M8 X 1.0	66	14.5	4.5	122
16	15	18	20	5	8	7.5	28	M5	21	$10^{0}_{-0.022}$	M10 X 1.0	67	14.5	5.5	123

Axial Foot (L)

CJ2ZWL Bore size – Stroke

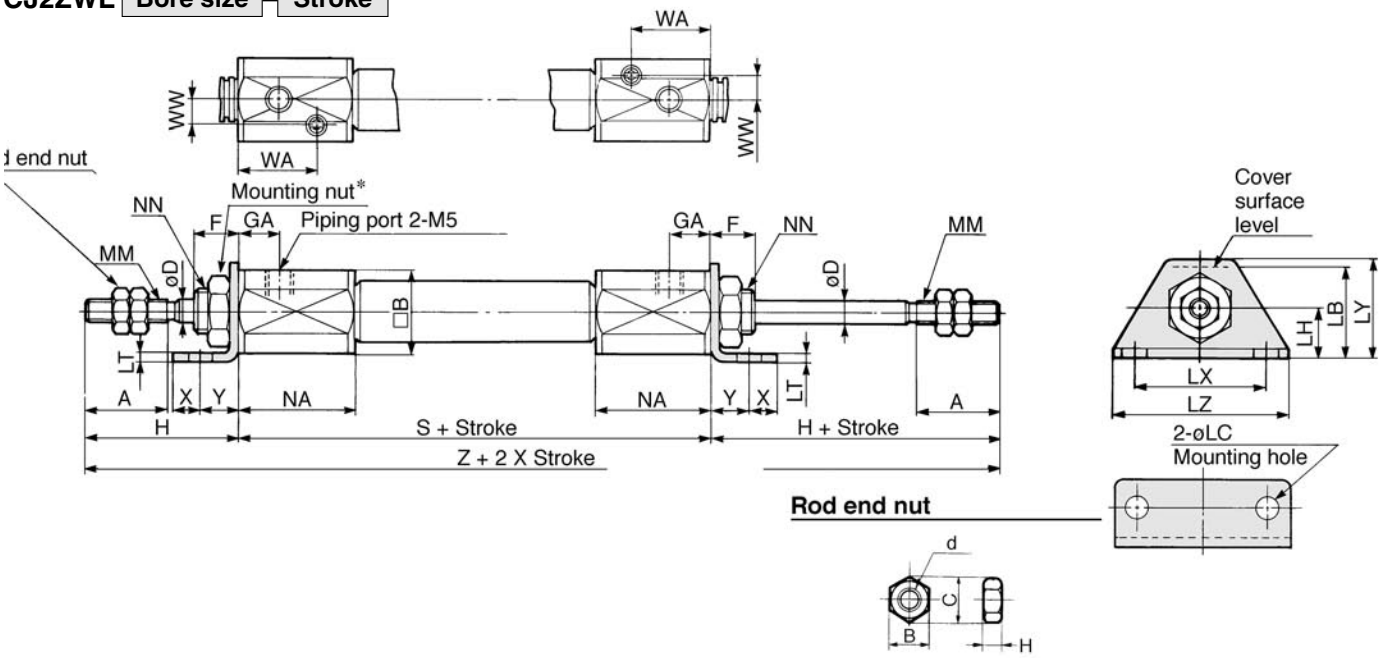

Material: Iron

Part No.	Bore	B	C	d	H
NTJ-010A	**10**	7	8.1	M4	3.2
NTJ-015A	**16**	8	9.2	M5	4

∗ Refer to p.1-32 for details of the mounting nut.

(mm)

Bore	A	B	D	F	LB	LC	LH	LT	LX	LY	LZ	GA	H	MM	NA	NN	S	WA	WW	X	Y	Z
10	15	15	4	8	16.5	4.5	9	1.6	24	16.5	32	7.5	28	M4	21	M8 X 1.0	66	14.5	4.5	5	7	122
16	15	18	5	8	23	5.5	14	2.3	33	25	42	7.5	28	M5	21	M10 X 1.0	67	14.5	5.5	6	9	123

Front Flange (F)

CJ2ZWF **Bore size** – **Stroke**

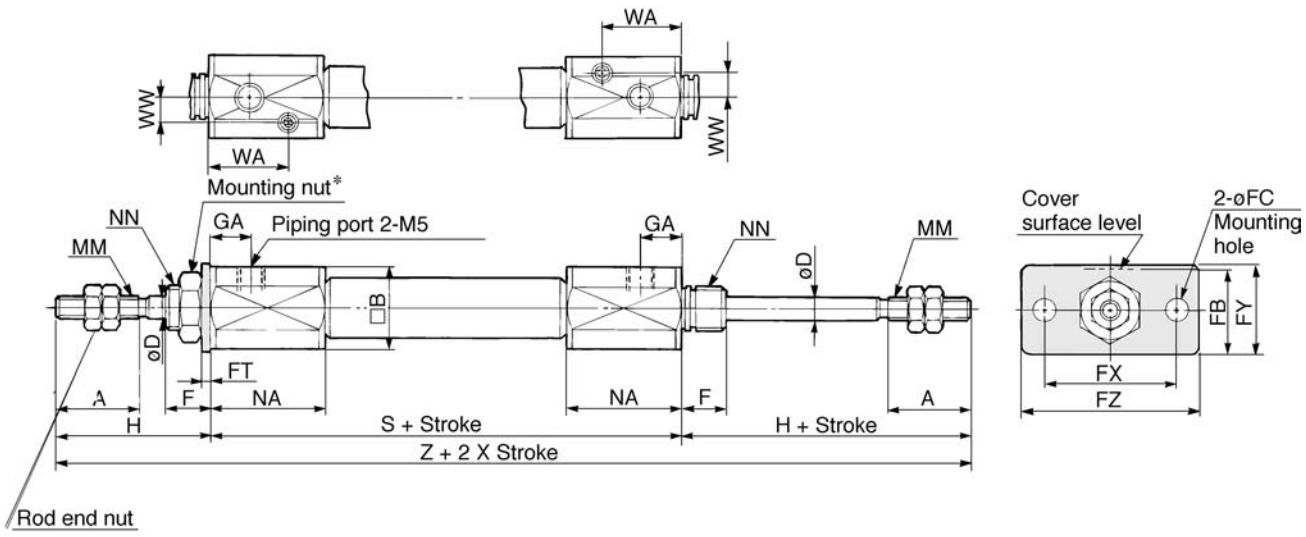

Material: Iron

Part No.	Bore	B	C	d	H
NTJ-010A	**10**	7	8.1	M4	3.2
NTJ-015A	**16**	8	9.2	M5	4

∗ Refer to p.1-32 for details of the mounting nut.

(mm)

Bore	A	B	D	F	FB	FC	FT	FX	FY	FZ	GA	H	MM	NA	NN	S	WA	WW	Z
10	15	15	4	8	14.5	4.5	1.6	24	14	32	7.5	28	M4	21	M8 X 1.0	66	14.5	4.5	122
16	15	18	5	8	19	5.5	2.3	33	20	42	7.5	28	M5	21	M10 X 1.0	67	14.5	5.5	123

Low Friction: Double Acting Single Rod

Series CJ2Q

ø10, ø16

How to Order

Bore size

10	10mm
16	16mm

Mounting

B	Basic
L	Axial foot
F	Front flange
D	Double clevis

Standard stroke (mm)

ø10	15, 30, 45, 60, 75, 100, 125, 150
ø16	15, 30, 45, 60, 75, 100, 125, 150, 175, 200

Standard CJ2Q [L] [16] — [60] [ ]

With auto switch CDJ2Q [L] [16] — [60] [ ] — [C73] [ ]

With auto switch
(Built-in magnet)

Port location on head cover

Symbol	Port location
—	Perpendicular
R	In-line

∗ Refer to p.1-74 for the configuration.

Auto switch

∗ Refer to the table below for selecting applicable auto switches.

∗ If requiring a built-in magnet cylinder without an auto switch, refer to the model number example below.

Number of switches

—	2
S	1
n	n

Band mounting

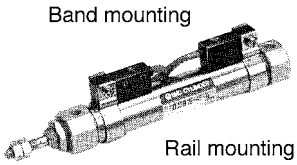

Rail mounting

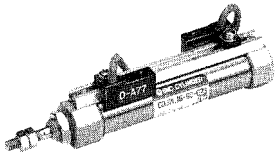

Applicable Auto Switches

Style	Special function	Electrical entry	Indicator	Wiring (Output)	Load voltage DC		Load voltage AC	Auto switch model Band	Rail Perp.	Rail In-line	Lead wire∗ (m) 0.5 (—)	3 (L)	5 (Z)	None (N)	Applicable load	
Reed switch	—	Grommet	Yes	3 wire (NPN)	—	5V	—	C76	—	A76H	●	●	—	—	IC	—
				2 wire	—	—	200V	—	A72	A72H	●	●	—	—	—	Relay PLC
			No		24V	12V	100V	C73	A73	A73H	●	●	●	—		
						5V, 12V	≤100V	C80	A80	A80H	●	●	—	—	IC	
		Connector	Yes			12V	—	C73C	A73C	—	●	●	●	●	—	
			No			5V, 12V	≤24V	C80C	A80C	—	●	●	●	●	IC	
	Diagnostic indication (2 colour)	Grommet	Yes			—	—	—	A79W	—	●	●	—	—	—	
Solid state switch	—	Grommet	Yes	3 wire (NPN)	24V	5V, 12V	—	H7A1	F7NV	F79	●	●	○	—	IC	Relay PLC
				3 wire (PNP)				H7A2	F7PV	F7P	●	●	○	—		
				2 wire		12V	—	H7B	F7BV	J79	●	●	○	—	—	
		Connector						H7C	J79C	—	●	●	●	●		
	Diagnostic indication (2 colour)	Grommet		3 wire (NPN)		5V, 12V	—	H7NW	F7NWV	F79W	●	●	○	—	IC	
				3 wire (PNP)				H7PW	—	F7PW	●	●	○	—		
				2 wire		12V		H7BW	H7BWV	J79W	●	●	○	—	—	
	Water resistant (2 colour)							H7BA	—	F7BA	—	●	○	—		
	With timer			3 wire (NPN)		5V, 12V		—	—	F7NT	—	●	○	—	IC	
	With diagnostic output (2 colour)			4 wire (NPN)				H7NF	—	F79F	●	●	○	—		
	Latch with diagnostic output (2 colour)					—		H7LF	—	F7LF	●	●	○	—	—	

∗ Lead wire length 0.5m·····— e.g.) C73C 5m·····Z e.g.) C73CZ
3m·····L C73CL None·····N C73CN

∗ Solid state switches marked with" ○ " are manufactured upon receipt of order.

Part No. of Cylinder with Built-in Magnet

Symbol "-A" (rail mounting) or "-B" (band mounting) should be suffixed to the part No. of the cylinder with auto switch.

Ex.	Rail mounting	CDJ2QB16-60-A
	Band mounting	CDJ2QB10-45-B

Specially designed to keep friction of the piston to a minimum. Suitable for contact-pressure control requiring smooth operation at low pressures.

Low Friction

Min. operating pressure: 0.03MPa

JIS symbol

Double acting/Single rod

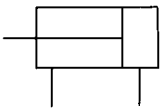

Application Example

The low friction cylinder should be used with precision regulator (e.g. Series IR).

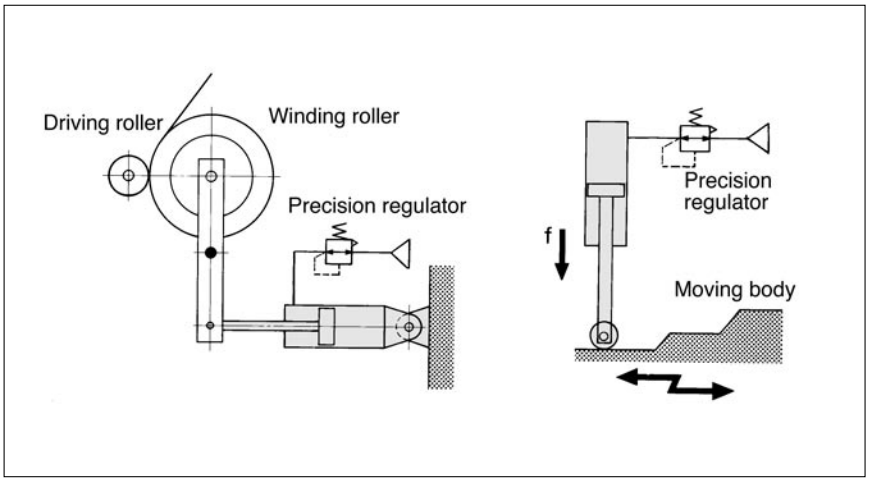

Specifications

Action		Double acting/Single rod
Fluid		Air
Proof pressure		1.05MPa
Max. operating pressure		0.7MPa
Min. operating pressure		0.03MPa
Ambient and fluid temperature		Without auto switch: −10°C to 70°C, With auto switch: −10°C to 60°C*
Cushion		Rubber bumper
Lubrication		Non-lube
Thread tolerance		JIS class 2
Stroke tolerance		$^{+1.0}_{0}$
Bore size (mm)		ø10, ø16
Mounting		Basic, Axial foot, Front flange, Double clevis
Piston speed		50 to 750mm/s
Allowable kinetic energy	**ø10**	0.035J
	ø16	0.090J

∗ No freezing

Standard Stroke

(mm)

Bore size	Standard stroke
10	15, 30, 45, 60, 75, 100, 125, 150
16	15, 30, 45, 60, 75, 100, 125, 150, 175, 200

Minimum Stroke for Auto Switch Mounting

• Refer to p.1-23

Mounting Accessories/Refer to p.1-32 for details.

	Mounting	Basic	Axial foot	Front flange	Double clevis*
Standard	Mounting nut	●	●	●	—
	Rod end nut	●	●	●	●
	Clevis pin	—	—	—	●
Option	Single knuckle joint	●	●	●	●
	Double knuckle joint*	●	●	●	●
	T bracket	—	—	—	●

* Double clevis or double knuckle joint are packaged with pins and rings.

Port Location on Head Cover

Either perpendicular to the cylinder axis or in-line with the cylinder axis is available for basic style.

In-line

Perpendicular

Mounting Bracket Part No.

Mounting bracket	Bore size (mm)	
	10	**16**
Foot	CJ-L010B	CJ-L016B
Flange	CJ-F010B	CJ-F016B
T bracket*	CJ-T010B	CJ-T016B

* T bracket is used with double clevis (D).

Auto Switch Mounting Bracket Part No. (Band mounting)

Bore size (mm)	Bracket part No.	Note
10	BJ2-010	Common use to all of D-C7, C8 and D-H7
16	BJ2-016	

Note) A set of stainless steel mounting screws "BBA4" is attached.
(A switch mounting band is not attached. Please order the band separately.) "BBA4" screws are used for D-C7/C8/H7.
"D-H7BAL" switch is set on the cylinder with the screws above when shipped.
Also, when a switch only is shipped, "BBA4" screws are attached.

Sliding Resistance at the Low Friction Side

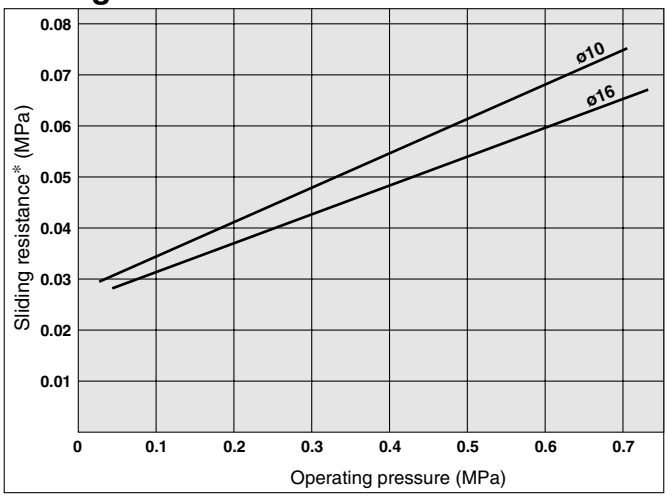

* Converted to cylinder operating pressure.

Weight

(g)

Bore size (mm)		**10**	**16**
Basic weight*		24	55
Additional weight for each 15 of stroke		4	6.5
Mounting bracket weight	Axial foot	8	20
	Front flange	5	15
	Double clevis** (with pins)	4	10

* This basic weight includes weights of mounting nut and rod end nut.
** The mounting nut is not attached to the double clevis style, so the mounting nut weight is already reduced.
Calculation example) CJ2QL10-45
- Basic weight ····· 24 (ø10)
- Additional weight ····· 4/15 stroke
- Cylinder stroke ····· 45 stroke
- Mounting bracket weight ····· 8 (Axial foot)

24+4/15 X 45+8=44g

Construction (The cylinder cannot be disassembled.)

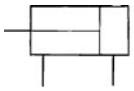

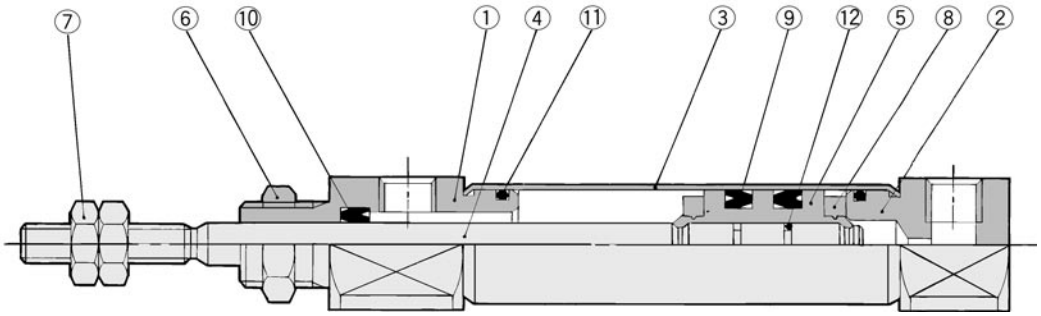

Component Parts

No.	Description	Material	Note
①	Rod cover	Aluminum alloy	White anodized
②	Head cover	Aluminum alloy	White anodized
③	Cylinder tube	Stainless steel	
④	Piston rod	Stainless steel	
⑤	Piston	Brass	
⑥	Mounting nut	Brass	Nickel plated

No.	Description	Material	Note
⑦	Rod end nut	Rolled steel	Nickel plated
⑧	Bumper	Urethane	
⑨	Piston seal	NBR	
⑩	Rod seal	NBR	
⑪	Tube gasket	NBR	
⑫	Piston gasket	NBR	

Basic Style (B)

CJ2QB **Bore size** – **Stroke** **Port location on head cover**

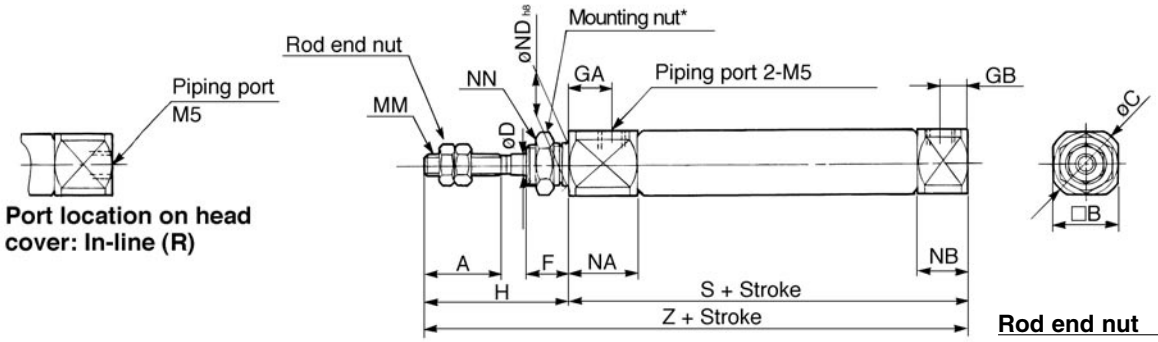

Rod end nut

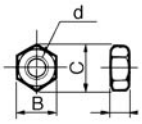

Material: Iron

Part No.	Bore	B	C	d	H
NTJ-010A	**10**	7	8.1	M4	3.2
NTJ-015A	**16**	8	9.2	M5	4

∗ Refer to p.1-32 for details of the mounting nut.

(mm)

Bore	A	B	C	D	F	GA	GB	H	MM	NA	NB	ND	NN	S	Z
10	15	12	14	4	8	8	5	28	M4	12.5	9.5	$8^{0}_{-0.022}$	M8 X 1.0	46	74
16	15	18	20	5	8	8	5	28	M5	12.5	9.5	$10^{0}_{-0.022}$	M10 X 1.0	47	75

Direct Mount: Double Acting Single Rod

Series CJ2R

ø10, ø16

How to Order

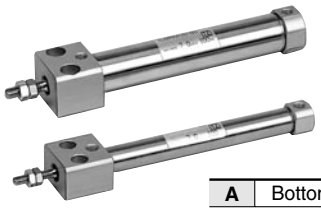

Bore size

10	10mm
16	16mm

Mounting

A	Bottom mounting

Standard stroke (mm)

ø10	15, 30, 45, 60, 75, 100, 125, 150
ø16	15, 30, 45, 60, 75, 100, 125, 150, 175, 200

Standard CJ2RA 16 — 60 ☐

With auto switch CDJ2RA 16 — 60 ☐ — C73 ☐

With auto switch
(Built-in magnet)

Band mounting

Rail mounting

Port location on head cover

Symbol	Port location
—	Perpendicular
R	In-line

∗ Refer to p.1-78 for the configuration.

Auto switch

∗ Refer to the table below for selecting applicable auto switches.

∗ If requiring a built-in magnet cylinder without an auto switch, refer to the model number example below.

Number of switches

—	2
S	1
n	n

Applicable Auto Switches

Style	Special function	Electrical entry	Indicator	Wiring (Output)	Load voltage DC		Load voltage AC	Auto switch model Band	Rail Perp.	Rail In-line	Lead wire∗ (m) 0.5 (—)	3 (L)	5 (Z)	None (N)	Applicable load	
Reed switch	—	Grommet	Yes	3 wire (NPN)	—	5V	—	C76	—	A76H	●	●	—	—	IC	—
				2 wire	—	—	200V	—	A72	A72H	●	●	—	—	—	Relay PLC
					24V	12V	100V	C73	A73	A73H	●	●	●	—		
			No			5V,12V	≤100V	C80	A80	A80H	●	●	—	—	IC	
		Connector	Yes			12V	—	C73C	A73C	—	●	●	●	●	—	
			No			5V,12V	≤ 24V	C80C	A80C	—	●	●	●	●	IC	
	Diagnostic indication (2 colour)	Grommet	Yes			—	—	—	A79W	—	●	●	—	—	—	
Solid state switch	—	Grommet	Yes	3 wire (NPN)	24V	5V,12V	—	H7A1	F7NV	F79	●	●	○	—	IC	Relay PLC
				3 wire (PNP)				H7A2	F7PV	F7P	●	●	○	—		
				2 wire		12V	—	H7B	F7BV	J79	●	●	○	—	—	
		Connector						H7C	J79C	—	●	●	●	●		
	Diagnostic indication (2 colour)			3 wire (NPN)		5V,12V	—	H7NW	F7NWV	F79W	●	●	○	—	IC	
				3 wire (PNP)				H7PW	—	F7PW	●	●	○	—		
				2 wire		12V		H7BW	H7BWV	J79W	●	●	○	—	—	
	Water resistant (2 colour)							H7BA	—	F7BA	—	●	○	—		
	With timer			3 wire (NPN)		5V,12V		—	—	F7NT	—	●	○	—	IC	
	With diagnostic output (2 colour)			4 wire (NPN)				H7NF	—	F79F	●	●	○	—		
	Latch with diagnostic output (2 colour)					—		H7LF	—	F7LF	●	●	○	—	—	

∗ Lead wire length 0.5m·····– e.g.) C73C 5m·····Z e.g.) C73CZ
3m·····L C73CL None·····N C73CN

∗ Solid state switches marked with" ○ " are manufactured upon receipt of order.

Part No. of Cylinder with Built-in Magnet

Symbol "-A" (rail mounting) or "-B" (band mounting) should be suffixed to the part No. of the cylinder with auto switch.

Ex.	Rail mounting	CDJ2RA16-60-A
	Band mounting	CDJ2RA10-45-B

Square rod cover makes direct contact mounting possible.

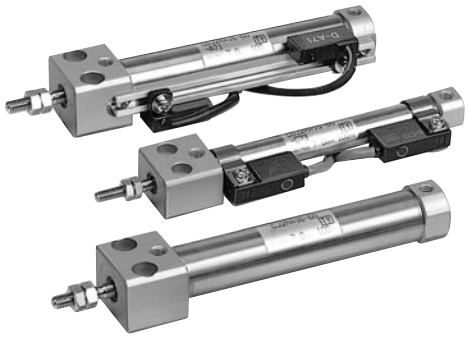

Specifications

Action		Double acting/Single rod
Fluid		Air
Proof pressure		1.05MPa
Max. operating pressure		0.7MPa
Min. operating pressure		0.06MPa
Ambient and fluid temperature		Without auto switch: −10°C to 70°C, With auto switch: −10°C to 60°C*
Cushion		Rubber bumper
Lubrication		Non-lube
Thread tolerance		JIS class 2
Stroke tolerance		$^{+1.0}_{0}$
Bore size (mm)		ø10, ø16
Mounting		Bottom mounting
Piston speed		50 to 750mm/s
Allowable kinetic energy	**ø10**	0.035J
	ø16	0.090J

∗ No freezing

Standard Stroke

(mm)

Bore size	Standard stroke
10	15, 30, 45, 60, 75, 100, 125, 150
16	15, 30, 45, 60, 75, 100, 125, 150, 175, 200

JIS symbol

Double acting/Single rod

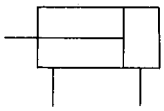

Minimum Strokes for Auto Switches Mounting

Mounting	Auto switch model	Number of switches	Min. stroke (mm)
Band mounting	D-C7 D-C8	2 (same surface)	50
		2 (different surfaces)	15
		1	15
	D-H7□ D-H7□W D-H7BAL D-H7NF	2 (same surface)	60
		2 (different surfaces)	20
		1	20
	D-C73C D-C80C D-H7C	2 (same surface)	65
		2 (different surfaces)	15
		1	15
	D-H7LF	2 (same surface)	65
		2 (different surfaces)	25
		1	25
Rail mounting	D-A7/A8 D-A73C/A80C	2	10
		1	5
	D-F7□V D-J79C	2	5
		1	5
	D-A79W D-F7□WV	2	15
		1	10
	D-F7□, J79, D-F79F, D-A7□H, A80H D-F7□W, J79W D-F7BAL	2	15
		1	15
	D-F7LF	2	25
		1	25

Accessory/ Refer to p.1-32 for details.

Standard	Rod end nut
Option	Single knuckle joint, Double knuckle joint*

∗ Double knuckle joint is packaged with pins and rings.

Weight

(g)

Bore size (mm)	10	16
Basic weight*	36	71.5
Additional weight for each 15 of stroke	4	6.5

* This basic weight includes weights of rod end nut.
Calculation example) CJ2RA10-45
- Basic weight: ····· 36 (ø10)
- Additional weight: ···· 4/15 stroke
- Cylinder stroke: ····· 45 stroke
  36+4/15 X 45=48g

Port Location on the Head Cover

Either perpendicular to the cylinder axis or in-line with the cylinder axis is available for basic style. (ø6 is available only as in-line style.)

In-line

Perpendicular

Auto Switch Mounting Bracket Part No.(Band mounting)

Bore size (mm)	Bracket part No.	Note
10	BJ2-010	Common use to all of D-C7, C8 and D-H7
16	BJ2-016	

Note) A set of stainless steel mounting screws "BBA4" is attached. (A switch mounting band is not attached. Please order the band separately.)
"BBA4" screws are used for D-C7/C8/H7.
"D-H7BAL" switch is set on the cylinder with the screws above when shipped.
Also, when a switch only is shipped, "BBA4" screws are attached.

Clean Series

10-CJ2RA | Mounting | Bore size | Stroke | Port location on head cover

- **Clean series**

The rod section of actuator is reinforced with the double-seal structure. The air cylinder can be incorporated in the system which directly discharges the external leak from the clean room through the relief port.

Specifications

Action	Double acting/Single rod
Bore size (mm)	ø10, ø16
Max. operating pressure	0.7MPa
Min. operating pressure	0.08MPa
Cushion	Rubber bumper
Standard stroke (mm)	Same as the standard
Auto switch	Possible to be mounted
Mounting	Rear pivot mounting

Construction

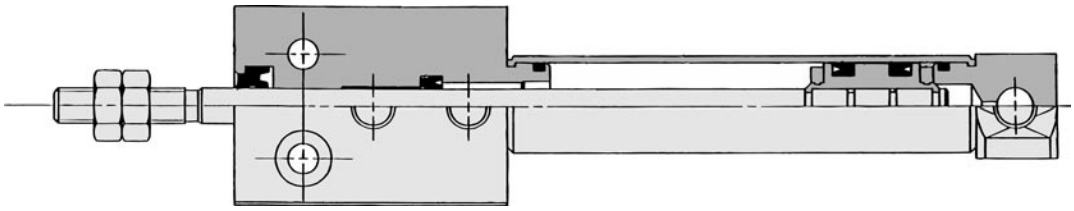

Construction (The cylinder cannot be disassembled.)

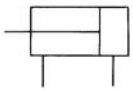

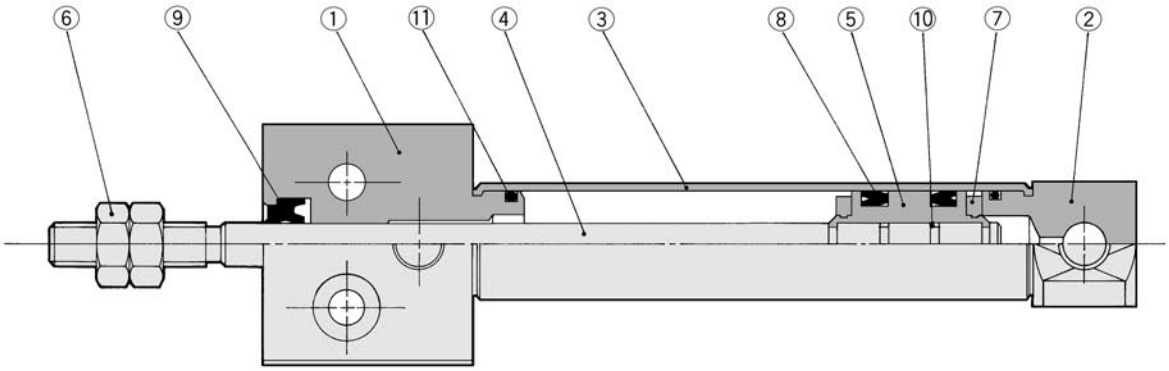

Component Parts

No.	Description	Material	Note
①	Rod cover	Aluminum alloy	White anodized
②	Head cover	Aluminum alloy	White anodized
③	Cylinder tube	Stainless steel	
④	Piston rod	Stainless steel	
⑤	Piston	Brass	
⑥	Rod end nut	Rolled steel	Nickel plated

No.	Description	Material	Note
⑦	Bumper	Urethane	
⑧	Piston seal	NBR	
⑨	Rod seal	NBR	
⑩	Piston gasket	NBR	
⑪	Tube gasket	NBR	

Bottom Mounting

CJ2RA **Bore size** — **Stroke** **Port location on head cover**

Port location on head cover: In-line (R)

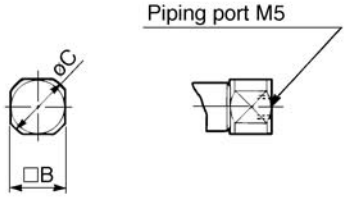

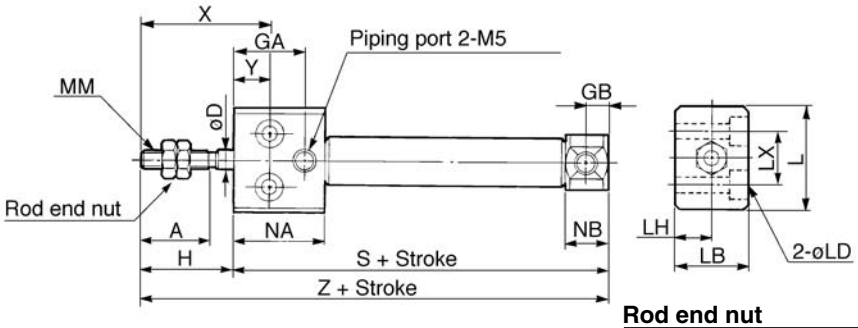

Rod end nut

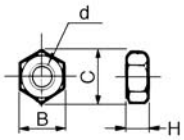

Material: Iron

Part No.	Bore	B	C	d	H
NTJ-010A	**10**	7	8.1	M4	3.2
NTJ-015A	**16**	8	9.2	M5	4

(mm)

Bore	A	B	C	D	GA	GB	H	L	LB	LD	LH	LX	MM	NA	NB	X	Y	S	Z
10	15	12	14	4	16	5	20	23	16	ø3.5, ø6.5Depth of counter bore: 4	8	12	M4	20.5	9.5	28	8	54	74
16	15	18	20	5	16	5	20	26	20	ø4.5, ø8Depth of counter bore: 5	10	16	M5	20.5	9.5	28	8	55	75

Auto Switch Mounting Position

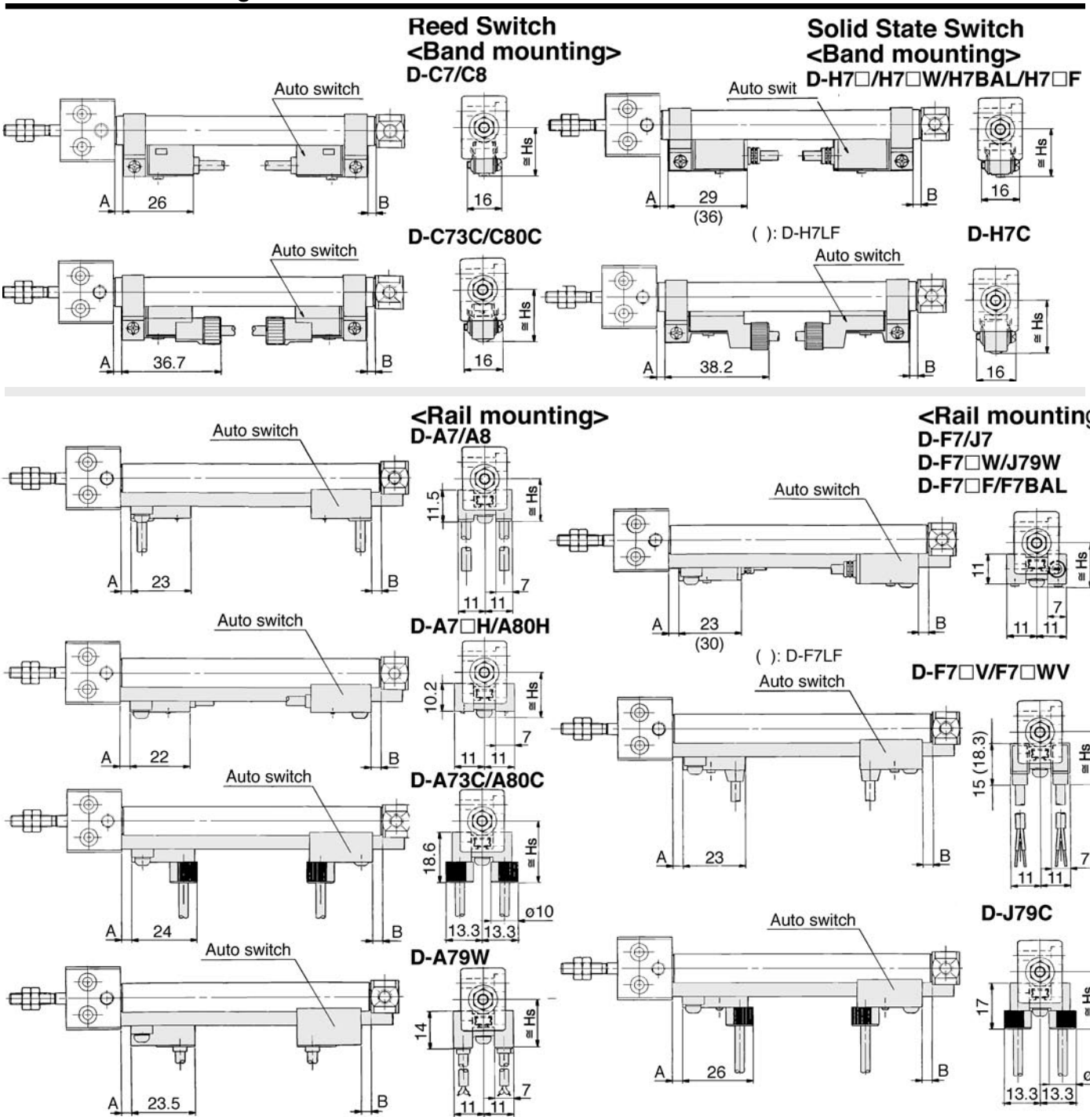

Auto Switch Mounting Position

Auto switch model / Bore size	D-C7 D-C8 D-C73C D-C80C		D-H7□ D-H7C		D-H7□W D-H7BAL D-H7□F		D-A7 D-A8		D-A7□H/A80H D-A73C/A80C D-F7/J7 D-J79C D-F7□V		D-F7□W D-F7BAL D-F7□F D-J79W D-F7□WV		D-A79W	
	A	B	A	B	A	B	A	B	A	B	A	B	A	B
10	2.5	2.5	1.5	1.5	0	0	3	3	3.5	3.5	7.5	7.5	0.5	0.5
16	3	3	2	2	0.5	0.5	3.5	3.5	4	4	8	8	1	1

Auto Switch Mounting Height

Auto switch model / Bore size	D-C7/C8 D-H7□/H7□W D-H7□F D-H7BAL	D-C73C D-C80C	D-H7C	D-A7 D-A8	D-A7□H/A80H D-F7/J7 D-F7□W/J79W D-F7BAL/F7□F	D-A73C D-A80C	D-F7□V D-F7□WV	D-J79C	D-A79W
	Hs	Hs	Hs	Hs	Hs	Hs	Hs	Hs	Hs
10	17	19.5	20	16.5	17.5	23.5	20	23	19
16	20.5	23	23.5	19.5	20.5	26.5	23	26	22

Direct Mount: Single Acting Spring Return/Extend

Series CJ2R

ø10, ø16

How to Order

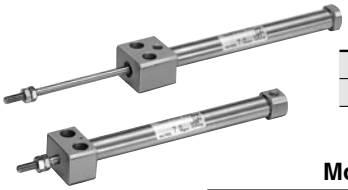

Bore size

10	10mm
16	16mm

Standard stroke (mm)

ø10	15, 30, 45, 60
ø16	15, 30, 45, 60, 75, 100, 125, 150

Mounting

A	Bottom mounting

Action

S	Single acting/Spring Return
T	Single acting/Spring Extend

Standard CJ2RA 16 — 45 S ☐

With auto switch CDJ2RA 16 — 45 S ☐ — C73 ☐

With auto switch
(Built-in magnet)

Port location on head cover

Symbol	Port location
—	Perpendicular
R	In-line

∗ Refer to p.1-78 for the configuration.
∗ Not applicable to single acting/spring extend style (T).

Auto switch

∗ Refer to the table below for selecting applicable auto switches.

∗ If requiring a built-in magnet cylinder without an auto switch, refer to the model number example below.

Number of switches

—	2
S	1
n	n

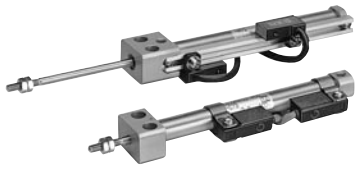

Applicable Auto Switches

Style	Special function	Electrical entry	Indicator	Wiring (Output)	Load voltage DC	Load voltage DC	Load voltage AC	Auto switch model Band	Rail Perp.	Rail In-line	Lead wire* (m) 0.5 (—)	3 (L)	5 (Z)	None (N)	Applicable load	
Reed switch	—	Grommet	Yes	3 wire (NPN)	—	5V	—	C76	—	A76H	●	●	—	—	IC	—
				2 wire	—	—	200V	—	A72	A72H	●	●	—	—	—	Relay PLC
					24V	12V	100V	C73	A73	A73H	●	●	●	—		
			No			5V, 12V	≤100V	C80	A80	A80H	●	●	—	—	IC	
		Connector	Yes			12V	—	C73C	A73C	—	●	●	●	●	—	
			No			5V, 12V	≤24V	C80C	A80C	—	●	●	●	●	IC	
	Diagnostic indication (2 colour)	Grommet	Yes			—	—	—	A79W	—	●	●	—	—	—	
Solid state switch	—	Grommet	Yes	3 wire (NPN)	24V	5V, 12V	—	H7A1	F7NV	F79	●	●	○	—	IC	Relay PLC
				3 wire (PNP)				H7A2	F7PV	F7P	●	●	○	—		
				2 wire		12V	—	H7B	F7BV	J79	●	●	○	—	—	
		Connector						H7C	J79C	—	●	●	●	●		
	Diagnostic indication (2 colour)	Grommet		3 wire (NPN)		5V, 12V	—	H7NW	F7NWV	F79W	●	●	○	—	IC	
				3 wire (PNP)				H7PW	—	F7PW	●	●	○	—		
				2 wire		12V		H7BW	H7BWV	J79W	●	●	○	—	—	
	Water resistant (2 colour)							H7BA	—	F7BA	—	●	○	—		
	With timer			3 wire (NPN)		5V, 12V		—	—	F7NT	—	●	○	—	IC	
	With diagnostic output (2 colour)			4 wire (NPN)				H7NF	—	F79F	●	●	○	—		
	Latch with diagnostic output (2 colour)					—		H7LF	—	F7LF	●	●	○	—	—	

∗ Lead wire length 0.5m·····— e.g.) C73C 5m·····Z e.g.) C73CZ
3m·····L C73CL None·····N C73CN

∗ Solid state switches marked with" ○ " are manufactured upon receipt of order.

Part No. of Cylinder with Built-in Magnet

Symbol "-A" (rail mounting) or "-B" (band mounting) should be suffixed to the part No. of the cylinder with auto switch.

Ex.	Rail mounting	CDJ2RA16-60S-A
	Band mounting	CDJ2RA10-45S-B

Square rod cover makes direct contact mounting possible.

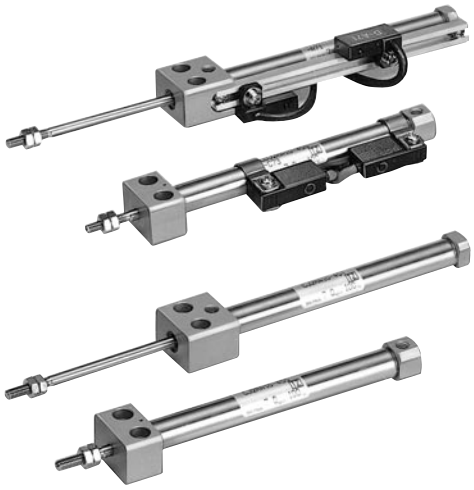

Specifications

Action		Single acting/Spring return	Single acting/Spring extend
Fluid		Air	
Proof pressure		1.05MPa	
Max. operating pressure		0.7MPa	
Min. operating pressure		0.15MPa	
Ambient and fluid temperature		Without auto switch: −10°C to 70°C, With auto switch: −10°C to 60°C*	
Cushion		Rubber bumper	
Lubrication		Non-lube	
Thread tolerance		JIS class 2	
Stroke tolerance		$^{+1.0}_{0}$	
Bore size (mm)		ø10, ø16	
Mounting		Bottom mounting	
Piston speed		50 to 750mm/s	
Allowable kinetic energy	ø10	0.035J	
	ø16	0.090J	

∗ No freezing

Standard Stroke

(mm)

Bore size	Standard stroke
10	15, 30, 45, 60
16	15, 30, 45, 60, 75, 100, 125, 150

Minimum Stokes for Auto Switch Mounting

• Refer to p.1-77

JIS symbol

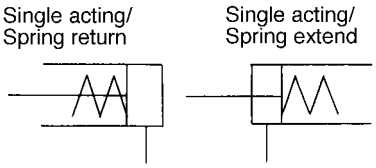

Accessory/ Refer to p.1-32 for details.

Standard	Rod end nut
Option	Single knuckle joint, Double knuckle joint*

∗ Double knuckle joint is packaged with pins and rings.

Auto Switch Mounting Bracket Part No. (Band mounting)

Bore size (mm)	Bracket part No.	Note
10	BJ2-010	Common use to all of D-C7, C8 and D-H7
16	BJ2-016	

Note) A set of stainless steel mounting screws “BBA4” is attached. (A switch mounting band is not attached. Please order the band separately.) “BBA4” screws are used for D-C7/C8/H7.
“D-H7BAL” switch is set on the cylinder with the screws above when shipped.
Also, when a switch only is shipped, “BBA4” screws are attached.

Spring Force

(N)

Bore size (mm)	Retracted side	Extended side
10	6.86	3.53
16	14.2	6.86

Weight

Spring Return

(g)

Bore size (mm)		ø10	ø16
Weight*	15 Stroke	38	73
	30 Stroke	45	90
	45 Stroke	54	112
	60 Stroke	63	134
	75 Stroke	—	155
	100 Stroke	—	198
	125 Stroke	—	234
	150 Stroke	—	260

∗ This weight includes weight of rod end nut.

Spring Extend

(g)

Bore size (mm)		ø10	ø16
Weight*	15 Stroke	44	78
	30 Stroke	50	94
	45 Stroke	59	114
	60 Stroke	67	135
	75 Stroke	—	154
	100 Stroke	—	192
	125 Stroke	—	226
	150 Stroke	—	250

∗ This weight includes weight of rod end nut.

Construction (The cylinder cannot be disassembled.)

CJ2RA□-□S

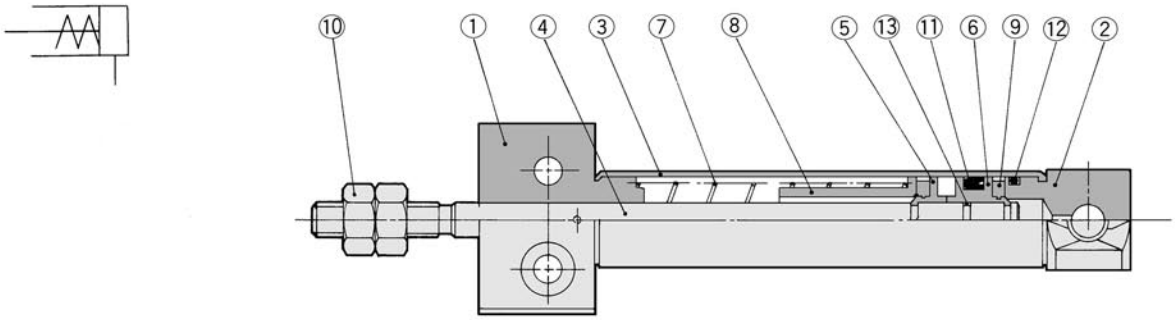

CJ2RA□-□T

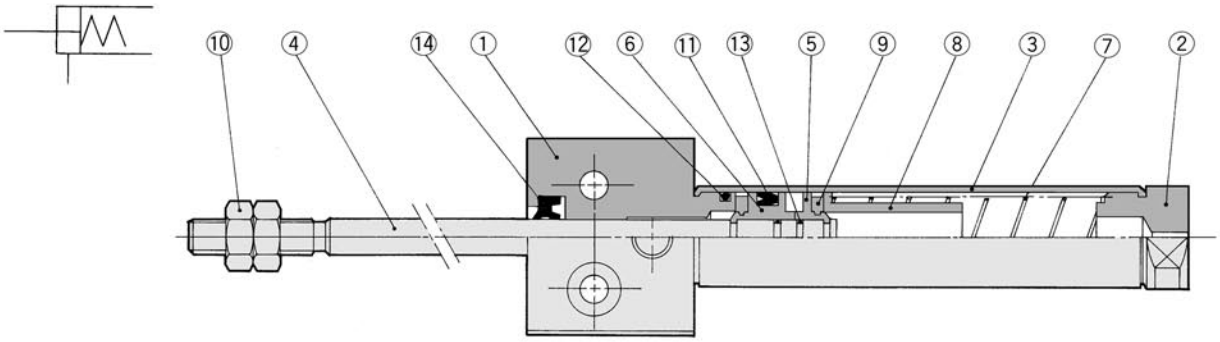

Component Parts

No.	Description	Material	Note
①	Rod cover	Aluminum alloy	White anodized
②	Head cover	Aluminum alloy	White anodized
③	Cylinder tube	Stainless steel	
④	Piston rod	Stainless steel	
⑤	Piston A	Brass	
⑥	Piston B	Brass	
⑦	Return spring	Piano wire	

No.	Description	Material	Note
⑧	Spring seat	Brass	
⑨	Bumper	Urethane	
⑩	Rod end nut	Rolled steel	Nickel plated
⑪	Piston seal	NBR	
⑫	Tube gasket	NBR	
⑬	Piston gasket	NBR	
⑭	Rod seal	NBR	

Single Acting/Bottom Mounting

Spring return/CJ2RA Bore size – Stroke S Port location on head cover

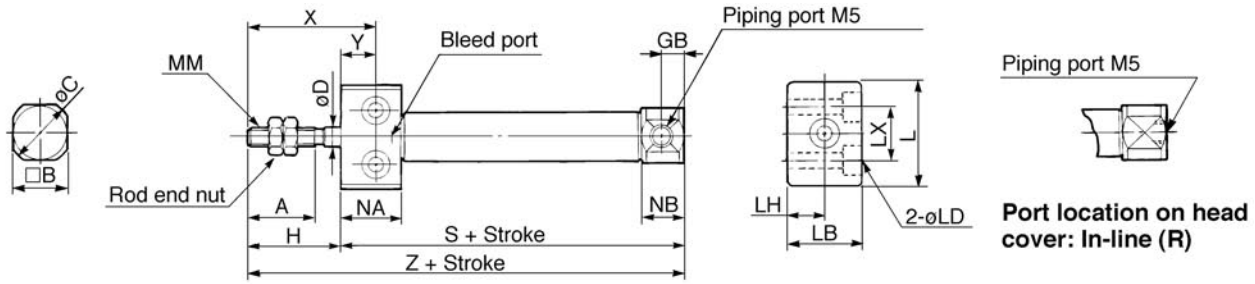

Spring extend/CJ2RA Bore size – Stroke T

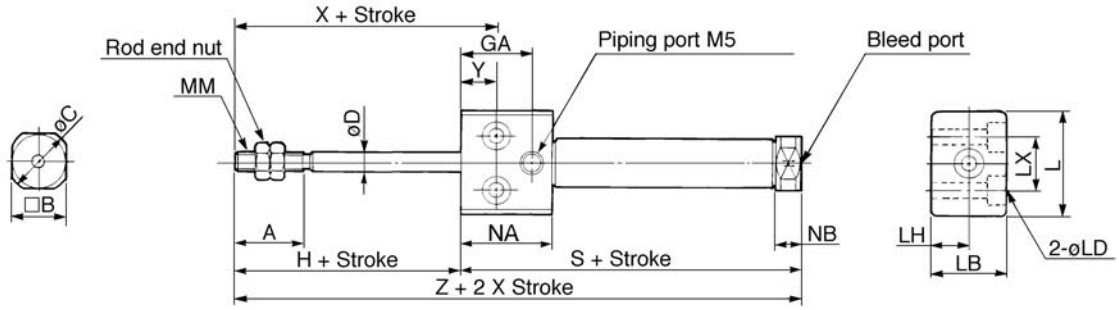

Rod end nut

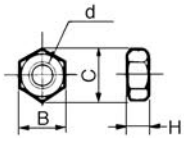

Material: Iron

Part No.	Bore	B	C	d	H
NTJ-010A	10	7	8.1	M4	3.2
NTJ-015A	16	8	9.2	M5	4

(mm)

Bore	A	B	C	D	GB	H	L	LB	LD	LH	LX	MM	NA	NB	X	Y
10	15	12	14	4	5	20	23	16	ø3.5, ø6.5Depth of counter bore: 4	8	12	M4	13.5	9.5	28	8
16	15	18	20	5	5	20	26	20	ø4.5, ø8Depth of counter bore: 5	10	16	M5	13.5	9.5	28	8

Dimensions by stroke/Spring return

Bore \ Symbol / Stroke	S								Z							
	5 to15	16 to 30	31 to 45	46 to 60	61 to 75	76 to 100	101 to 125	126 to 150	5 to 15	16 to 30	31 to 45	46 to 60	61 to 75	76 to 100	101 to 125	126 to 150
10	53.5	61	73	85	—	—	—	—	73.5	81	93	105	—	—	—	—
16	53.5	62	74	86	92	116	134	146	73.5	82	94	106	112	136	154	166

Dimensions by stroke/Spring extend (Dimensions not mentioned in the table below are the same as the above table.)

Bore	GA	NA	NB	S								Z							
				5 to 15	16 to 30	31 to 45	46 to 60	61 to 75	76 to 100	101 to 125	126 to 150	5 to 15	16 to 30	31 to 45	46 to 60	61 to 75	76 to 100	101 to 125	126 to 150
10	16	20.5	5.5	56.5	64	76	88	—	—	—	—	76.5	84	96	108	—	—	—	—
16	16	20.5	5.5	56.5	65	77	89	95	119	137	149	76.5	85	97	109	115	139	157	169

Non-rotating Rod/Direct Mount: Double Acting Single Rod

Series CJ2RK

ø10, ø16

How to Order

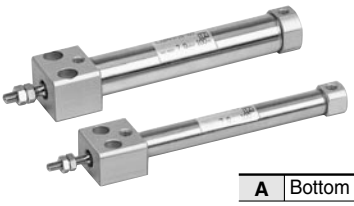

Bore size

10	10mm
16	16mm

Mounting

A	Bottom mounting

Standard stroke (mm)

ø10	15, 30, 45, 60, 75, 100, 125, 150
ø16	15, 30, 45, 60, 75, 100, 125, 150, 175, 200

Standard CJ2RKA 16 — 60 ☐

With auto switch CDJ2RKA 16 — 60 ☐ — C73 ☐

With auto switch
(built-in magnet)

Port location on head cover

Symbol	Port location
—	Perpendicular
R	In-line

∗ Refer to p.1-78 for the configuration.

Auto switch

∗ Refer to the table below for selecting applicable auto switches.

∗ If requiring a built-in-magnet cylinder without an auto switch, refer to the model number example below.

Number of switches

—	2
S	1
n	n

Applicable Auto Switches

Style	Special function	Electrical entry	Indicator	Wiring (Output)	Load voltage DC	Load voltage DC	Load voltage AC	Auto switch model Band	Rail Perp.	Rail In-line	Lead wire∗ (m) 0.5 (—)	3 (L)	5 (Z)	None (N)	Applicable load	
Reed switch	—	Grommet	Yes	3 wire (NPN)	—	5V	—	**C76**	—	**A76H**	●	●	—	—	IC	—
				2 wire	—	—	200V	—	**A72**	**A72H**	●	●	—	—	—	Relay PLC
					24V	12V	100V	**C73**	**A73**	**A73H**	●	●	●	—		
			No			5V, 12V	≤100V	**C80**	**A80**	**A80H**	●	●	—	—	IC	
		Connector	Yes			12V	—	**C73C**	**A73C**	—	●	●	●	●	—	
			No			5V, 12V	≤24V	**C80C**	**A80C**	—	●	●	●	●	IC	
	Diagnostic indication (2 colour)	Grommet	Yes			—	—	—	**A79W**	—	●	●	—	—	—	
Solid state switch	—	Grommet	Yes	3 wire (NPN)	24V	5V, 12V	—	**H7A1**	**F7NV**	**F79**	●	●	○	—	IC	Relay PLC
				3 wire (PNP)				**H7A2**	**F7PV**	**F7P**	●	●	○	—		
				2 wire		12V	—	**H7B**	**F7BV**	**J79**	●	●	○	—	—	
		Connector						**H7C**	**J79C**	—	●	●	●	●		
	Diagnostic indication (2 colour)	Grommet		3 wire (NPN)		5V, 12V	—	**H7NW**	**F7NWV**	**F79W**	●	●	○	—	IC	
				3 wire (PNP)				**H7PW**	—	**F7PW**	●	●	○	—		
				2 wire		12V		**H7BW**	**H7BWV**	**J79W**	●	●	○	—	—	
	Water resistant (2 colour)							**H7BA**	—	**F7BA**	—	●	○	—		
	With timer			3 wire (NPN)		5V, 12V		—	—	**F7NT**	—	●	○	—	IC	
	With diagnostic output (2 colour)			4 wire (NPN)				**H7NF**	—	**F79F**	●	●	○	—		
	Latch with diagnostic output (2 colour)					—		**H7LF**	—	**F7LF**	●	●	○	—	—	

∗ Lead wire length 0.5m·····— e.g.) C73C 5m·····Z e.g.) C73CZ
3m·····L C73CL None·····N C73CN

∗ Solid state switches marked with" ○ " are manufactured upon receipt of order.

Part No. of Cylinder with Built-in Magnet

Symbol "-A" (rail mounting) or "-B" (band mounting) should be suffixed to the part No. of the cylinder with auto switch.

Ex.	Rail mounting	CDJ2RKA16-60-A
	Band mounting	CDJ2RKA10-45-B

Non-rotating rod with hexagon rod.

High non-rotating accuracy
ø10: ±1.5°, ø16: ±1°
Auto switch can be mounted to detect the cylinder stroke position.

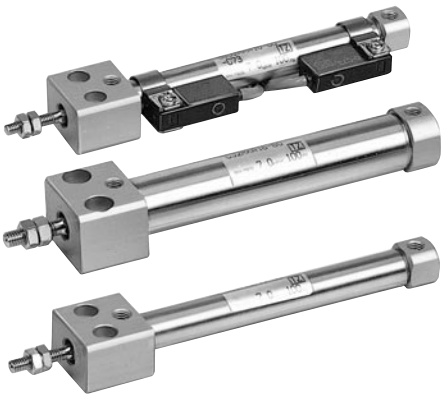

JIS symbol

Double acting/Single rod

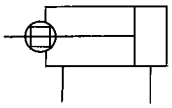

Specifications

Action		Double acting/Single rod
Fluid		Air
Proof pressure		1.05MPa
Max. operating pressure		0.7MPa
Min. operating pressure		0.06MPa
Ambient and fluid temperature		Without auto switch: −10°C to 70°C, With auto switch: −10°C to 60°C*
Cushion		Rubber bumper
Lubrication		Non-lube
Thread tolerance		JIS class 2
Stroke tolerance		$^{+1.0}_{0}$
Non-rotating accuracy		ø10: ±1.5°, ø16: ±1°
Mounting		Bottom mounting
Piston speed		50 to 750mm/s
Allowable kinetic energy	**ø10**	0.035J
	ø16	0.090J

* No freezing

Standard Stroke

(mm)

Bore size	Standard stroke
10	15, 30, 45, 60, 75, 100, 125, 150
16	15, 30, 45, 60, 75, 100, 125, 150, 175, 200

Minimum Strokes for Auto Switch Mounting

• Refer to p.1-77

Accessory/ Refer to p.1-32 for details.

Standard	Rod end nut
Option	Single knuckle joint, Double knuckle joint*

* Double knuckle joint is packaged with pins and rings.

Weight

(g)

Bore size (mm)	10	16
Basic weight*	36	71.5
Additional weight for each 15 of stroke	4	6.5

* This basic weight includes weight of rod end nut.
Calculation example: CJ2RKA10-45
- Basic weight: ····· 36 (ø10)
- Additional weight: ····· 4/15 stroke
- Cylinder stroke: ····· 45 stroke
  36+4/15 X 45=48g

Port Location on Head Cover

Either perpendicular to the cylinder axis or in-line with the cylinder axis is available for basic.

In-line

Perpendicular

Auto Switch Mounting Bracket Part No. (Band mounting)

Bore size (mm)	Bracket part No.	Note
10	BJ2-010	Common use to all of D-C7, C8 and D-H7
16	BJ2-016	

Note) A set of stainless steel mounting screws "BBA4" is attached.
(A switch mounting band is not attached. Please order the band separately.) "BBA4" screws are used for D-C7/C8/H7.
"D-H7BAL" switch is set on the cylinder with the screws above when shipped.
Also, when a switch only is shipped, "BBA4" screws are attached.

⚠ Caution

Precautions on handling

<Mounting>

- Avoid using the air cylinder in such a way that rotational torque would be applied to the piston rod because this will deform the non-rotating guide, thus affecting the non-rotating accuracy. Refer to the table below for the approximate values of the allowable range of rotational torque.

	ø10	ø16
Allowable rotational torque (Nm)	0.02	0.04

- Operate the cylinder in such a way that the load to the piston rod is always applied in the axial direction.
- To screw a bracket onto the threaded portion at the tip of the piston rod, make sure to retract the piston rod entirely, and place a wrench over the flat portion of the rod that protrudes. To tighten, take precautions to prevent the tightening torque from being applied to the non-rotating guide.

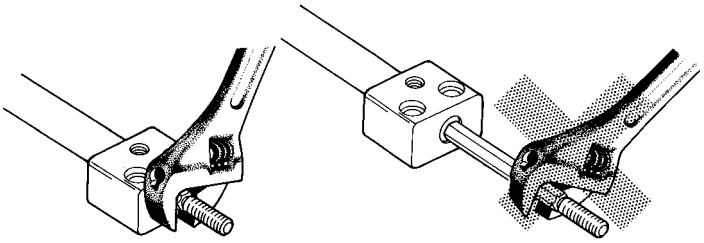

Construction (The cylinder cannot be disassembled.)

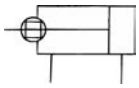

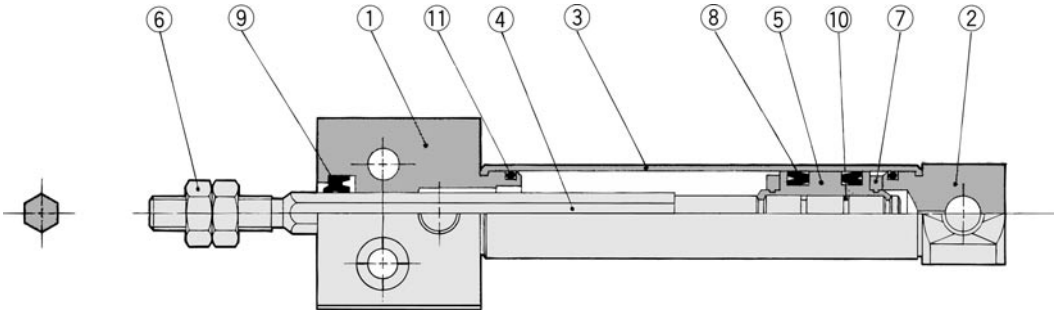

Component Parts

No.	Description	Material	Note
①	Rod cover	Aluminum alloy	White anodized
②	Head cover	Aluminum alloy	White anodized
③	Cylinder tube	Stainless steel	
④	Piston rod	Stainless steel	
⑤	Piston	Brass	
⑥	Rod end nut	Rolled steel	Nickel plated

No.	Description	Material	Note
⑦	Bumper	Urethane	
⑧	Piston seal	NBR	
⑨	Rod seal	NBR	
⑩	Piston gasket	NBR	
⑪	Tube gasket	NBR	

Bottom Mounting

CJ2RKA | **Bore size** | – | **Stroke** | **Port location on head cover**

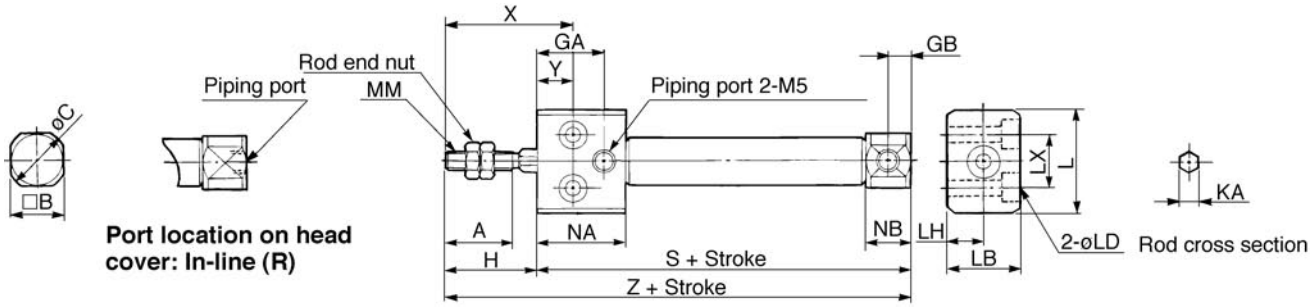

Rod end nut

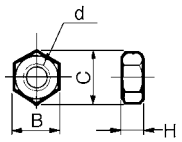

Material: Iron

Part No.	Bore size	B	C	d	H
NTJ-010A	**10**	7	8.1	M4	3.2
NTJ-015A	**16**	8	9.2	M5	4

(mm)

Bore	A	B	C	GA	GB	H	KA	L	LB	LD	LH	LX	MM	NA	NB	X	Y	S	Z
10	15	12	14	16	5	20	4.2	23	16	ø3.5, ø6.5Depth of counter bore: 4	8	12	M4	20.5	9.5	28	8	54	74
16	15	18	20	16	5	20	5.2	26	20	ø4.5, ø8Depth of counter bore: 5	10	16	M5	20.5	9.5	28	8	55	75

Non-rotating Rod/Direct Mount: Single Acting Spring Return/Extend

Series CJ2RK

ø10, ø16

How to Order

Bore size

10	10mm
16	16mm

Standard stroke (mm)

ø10	15, 30, 45, 60
ø16	15, 30, 45, 60, 75, 100, 125, 150

Mounting

A	Bottom mounting

Action

S	Single acting/Spring return
T	Single acting/Spring extend

Standard CJ2RKA 16 — 45 S □

With auto switch CDJ2RKA 16 — 45 S □ — C73 □

With auto switch
(built-in magnet)

Port location on head cover

Symbol	Port location
—	Perpendicular
R	In-line

∗ Refer to p.1-78 for the configuration.
∗ Not applicable to single acting/spring extend (T).

Auto switch

∗ Refer to the table below for selecting applicable auto switches.

∗ If requiring a built-in magnet cylinder without an auto switch, refer to the model number example below.

Number of switches

—	2
S	1
n	n

Applicable Auto Switches

Style	Special function	Electrical entry	Indicator	Wiring (Output)	Load voltage DC	Load voltage DC	Load voltage AC	Auto switch model Band	Auto switch model Rail Perp.	Auto switch model Rail In-line	Lead wire∗ (m) 0.5 (—)	3 (L)	5 (Z)	None (N)	Applicable load	
Reed switch	—	Grommet	Yes	3 wire (NPN)	—	5V	—	C76	—	A76H	●	●	—	—	IC	—
				2 wire	—	—	200V	—	A72	A72H	●	●	—	—	—	Relay PLC
			No		24V	12V	100V	C73	A73	A73H	●	●	●	—		
						5V,12V	≤100V	C80	A80	A80H	●	●	—	—	IC	
		Connector	Yes			12V	—	C73C	A73C	—	●	●	●	●	—	
			No			5V,12V	≤24V	C80C	A80C	—	●	●	●	●	IC	
	Diagnostic indication (2 colour)	Grommet	Yes			—	—	—	A79W	—	●	●	—	—	—	
Solid state switch	—	Grommet	Yes	3 wire (NPN)	24V	5V,12V	—	H7A1	F7NV	F79	●	●	○	—	IC	Relay PLC
				3 wire (PNP)				H7A2	F7PV	F7P	●	●	○	—		
				2 wire		12V	—	H7B	F7BV	J79	●	●	○	—	—	
		Connector						H7C	J79C	—	●	●	●	●		
	Diagnostic indication (2 colour)	Grommet		3 wire (NPN)		5V,12V	—	H7NW	F7NWV	F79W	●	●	○	—	IC	
				3 wire (PNP)				H7PW	—	F7PW	●	●	○	—		
				2 wire		12V		H7BW	H7BWV	J79W	●	●	○	—	—	
	Water resistant (2 colour)							H7BA	—	F7BA	—	●	○	—		
	With timer			3 wire (NPN)		5V,12V		—	—	F7NT	—	●	○	—	IC	
	With diagnostic output (2 colour)			4 wire (NPN)				H7NF	—	F79F	●	●	○	—		
	Latch with diagnostic output (2 colour)					—		H7LF	—	F7LF	●	●	○	—	—	

∗ Lead wire length 0.5m·····— e.g.) C73C 5m·····Z e.g.) C73CZ
3m·····L C73CL None·····N C73CN

∗ Solid state switches marked with" ○ " are manufactured upon receipt of order.

Part No. of Cylinder with Built-in Magnet

Symbol "-A" (rail mounting) or "-B" (band mounting) should be suffixed to the part No. of the cylinder with auto switch.

Ex.	Rail mounting	CDJ2RKA16-60S-A
	Band mounting	CDJ2RKA10-45S-B

Non-rotating rod with hexagon rod.

High non-rotating accuracy
ø10: ±1.5°, ø16: ±1°
No lubrication required
Auto switch can be mounted to detect the cylinder stroke position.

JIS symbol

Single acting/ Spring return

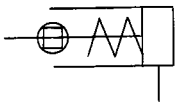

Single acting/ Spring extend

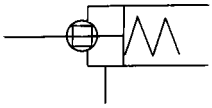

Specifications

Action		Single acting/Spring return	Single acting/Spring extend
Fluid		Air	
Proof pressure		1.05MPa	
Max. operating pressure		0.7MPa	
Min. operating pressure		0.15MPa	
Ambient and fluid temperature		Without auto switch: −10°C to 70°C, With auto switch: −10°C to 60°C*	
Cushion		Rubber bumper	
Lubrication		Non-lube	
Thread tolerance		JIS class 2	
Stroke tolerance		$^{+1.0}_{0}$	
Non-rotating accuracy		ø10: ±1.5°, ø16: ±1°	
Mounting		Bottom mounting	
Bore size (mm)		ø10, ø16	
Piston speed		50 to 750mm/s	
Allowable kinetic energy	ø10	0.035J	
	ø16	0.090J	

* No freezing

Standard Stroke

(mm)

Bore size	Standard stroke
10	15, 30, 45, 60
16	15, 30, 45, 60, 75, 100, 125, 150

Minimum Strokes for Auto Switch Mounting

- Refer to p.1-77

Accessory/ Refer to p.1-32 for details.

Standard	Rod end nut
Option	Single knuckle joint, Double knuckle joint*

* Double knuckle joint is packaged with pins and rings.

Auto Switch Mounting Bracket Part No. (Band mounting)

Bore size (mm)	Bracket part No.	Note
10	BJ2-010	Common use to all of D-C7, C8 and D-H7
16	BJ2-016	

Note) A set of stainless steel mounting screws "BBA4" is attached.
(A switch mounting band is not attached. Please order the band separately.) "BBA4" screws are used for D-C7/C8/H7.
"D-H7BAL" switch is set on the cylinder with the screws above when shipped.
Also, when a switch only is shipped, "BBA4" screws are attached.

Spring Force

(N)

Bore size (mm)	Retracted side	Extended side
10	6.86	3.53
16	14.2	6.86

Weight

Spring Return

(g)

Bore size (mm)		ø10	ø16
Weight*	15 Stroke	38	73
	30 Stroke	45	90
	45 Stroke	54	112
	60 Stroke	63	134
	75 Stroke	—	155
	100 Stroke	—	198
	125 Stroke	—	234
	150 Stroke	—	260

∗ This weight includes weight of rod end nut.

Spring Extend

(g)

Bore size (mm)		ø10	ø16
Weight*	15 Stroke	44	78
	30 Stroke	50	94
	45 Stroke	59	114
	60 Stroke	67	135
	75 Stroke	—	154
	100 Stroke	—	192
	125 Stroke	—	226
	150 Stroke	—	250

∗ This weight includes weight of rod end nut.

Construction (The cylinder cannot be disassembled.)

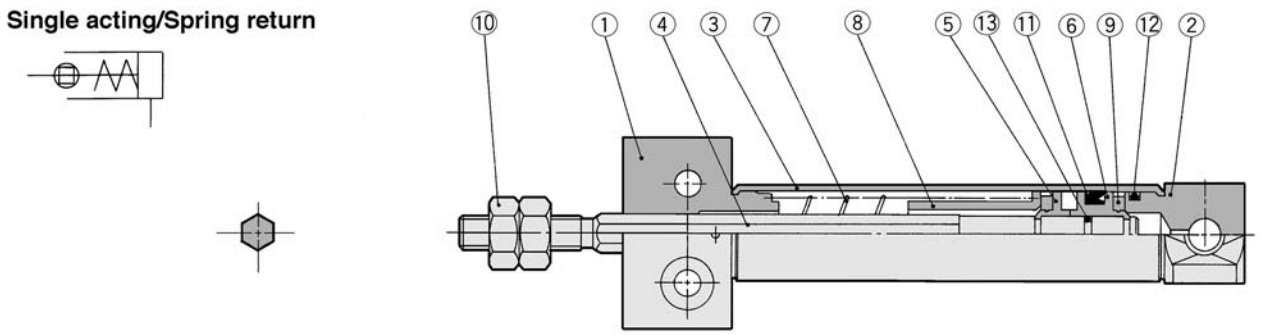

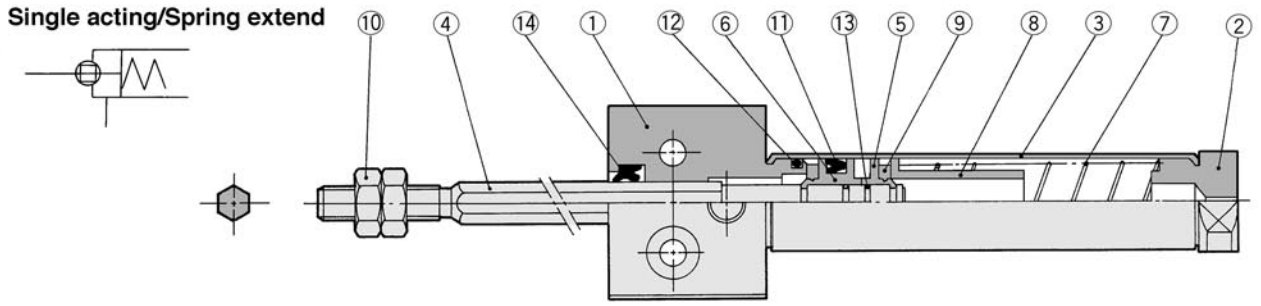

Component Parts

No.	Description	Material	Note
①	Rod cover	Aluminum alloy	White anodized
②	Head cover	Aluminum alloy	White anodized
③	Cylinder tube	Stainless steel	
④	Piston rod	Stainless steel	
⑤	Piston A	Brass	
⑥	Piston B	Brass	
⑦	Return spring	Piano wire	
⑧	Spring seat	Brass	

No.	Description	Material	Note
⑨	Bumper	Urethane	
⑩	Rod end nut	Rolled steel	Nickel plated
⑪	Piston seal	NBR	
⑫	Tube gasket	NBR	
⑬	Piston gasket	NBR	
⑭	Rod seal	NBR	

Single Acting/Bottom Mounting

Spring return/CJ2RK Bore size – Stroke S Port location on head cover

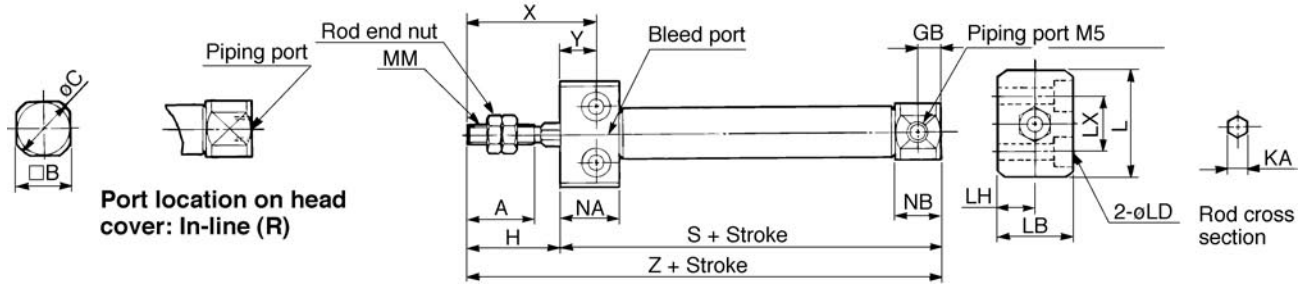

Spring extend/CJ2RK Bore size – Stroke T

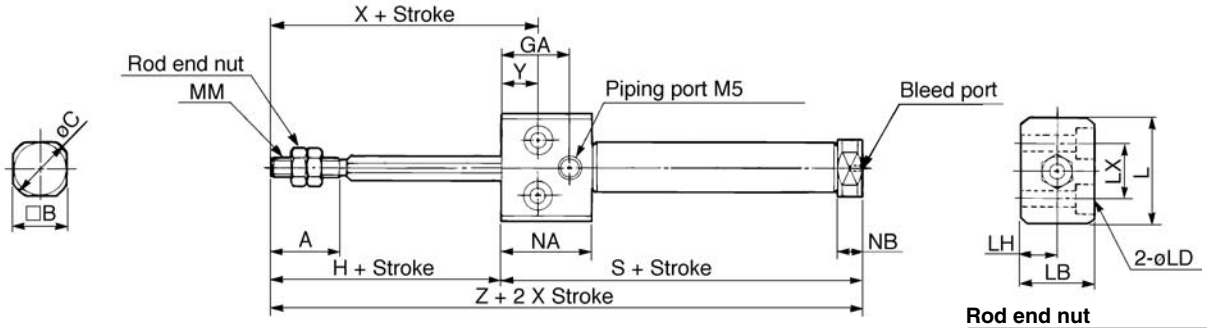

Rod end nut

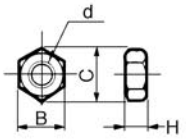

Material: Iron

Part No.	Bore	B	C	d	H
NTJ-010A	10	7	8.1	M4	3.2
NTJ-015A	16	8	9.2	M5	4

(mm)

Bore	A	B	C	GB	H	KA	L	LB	LD	LH	LX	MM	NA	NB	X	Y
10	15	12	14	5	20	4.2	23	16	ø3.5, ø6.5Depth of counter bore: 4	8	12	M4	13.5	9.5	28	8
16	15	18	20	5	20	5.2	26	20	ø4.5, ø8Depth of counter bore: 5	10	16	M5	13.5	9.5	28	8

Dimensions by stroke/Spring return

Bore \ Symbol / Stroke	S								Z							
	5 to 15	16 to 30	31 to 45	46 to 60	61 to 75	76 to 100	101 to 125	126 to 150	5 to 15	16 to 30	31 to 45	46 to 60	61 to 75	76 to 100	101 to 125	126 to 150
10	53.5	61	73	85	—	—	—	—	73.5	81	93	105	—	—	—	—
16	53.5	62	74	86	92	116	134	146	73.5	82	94	106	112	136	154	166

Dimensions by stroke/Spring extend (Dimensions not mentioned in the below table are the same as the above table.)

(mm)

Bore	GA	NA	NB	S								Z							
				5 to 15	16 to 30	31 to 45	46 to 60	61 to 75	76 to 100	101 to 125	126 to 150	5 to 15	16 to 30	31 to 45	46 to 60	61 to 75	76 to 100	101 to 125	126 to 150
10	16	20.5	5.5	56.5	64	76	88	—	—	—	—	76.5	84	96	108	—	—	—	—
16	16	20.5	5.5	56.5	65	77	89	95	119	137	149	76.5	85	97	109	115	139	157	169