THIS DRAWING IS UNPUBLISHED. RELEASED FOR PUBLICATION -,- .
© COPYRIGHT - By - ALL RIGHTS RESERVED.

LOC	DIST
CM	00

REVISIONS

P	LTR	DESCRIPTION	DATE	DWN	APVD
	L1	REVISED PER ECO-11-004587	11MAR11	RK	HMR

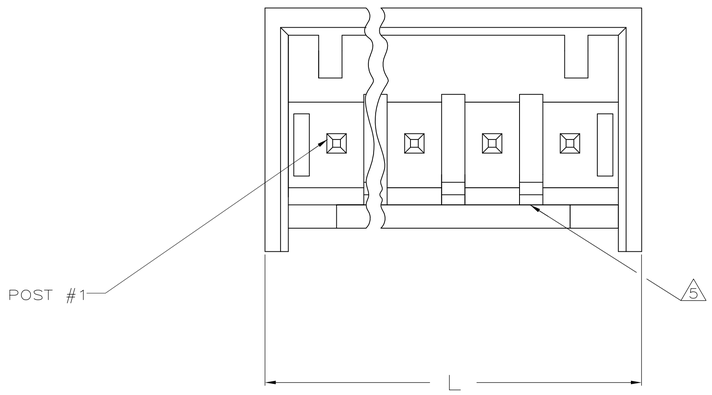

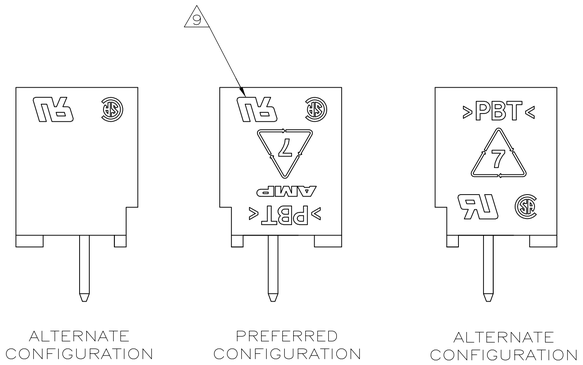

ALTERNATE CONFIGURATION | PREFERRED CONFIGURATION | ALTERNATE CONFIGURATION

POSSIBLE MARKING CONFIGURATIONS
SCALE 5:1

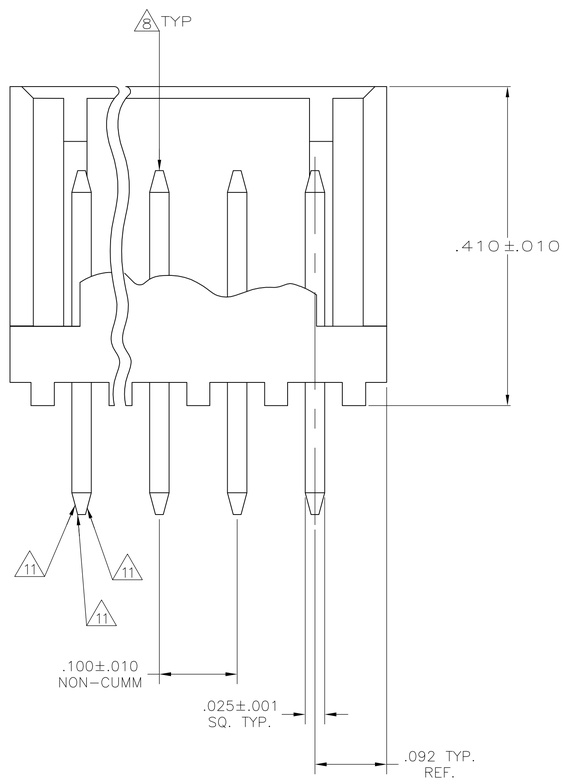

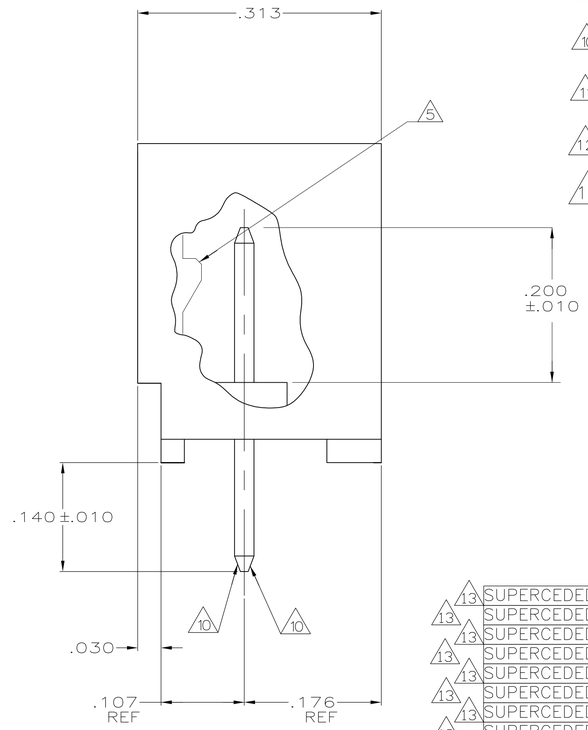

1. MATERIAL: HEADER- POLYESTER UL94V-O (BLACK)
   POST- COPPER ALLOY.
2. SOLDER SIDE OF P.C. BOARD SHOWN.
3. PARTS COMPLY WITH AMP SOLDERABILITY SPEC 109-11-2.
4. ONE HOLE MAY BE UNDERSIZED (.032-.035 DIA) FOR ASSEMBLY RETENTION DURING WAVE SOLDERING.
5. LATCH DETENT FEATURE OCCURS 2 PLACES ON EACH END (MAXIMUM OF FOUR PER PART). FOR 2 THRU 5 CIRCUIT HEADERS, LATCH FEATURE OCCURS BETWEEN EACH CIRCUIT.
6. COORDINATE DIMENSION APPLIES FROM CENTER OF ACTUAL FEATURE.
7. POST: 100% MATTE TIN PLATED.
8. POST MUST WITHSTAND 3.0 LBS (13 NEWTONS) MIN FORCE WITHOUT DISLODGING, EITHER DIRECTION.
9. UL AND CSA LOGO WILL APPEAR IN THIS AREA. AMP LOGO MAY APPEAR IN THIS AREA OR ON BOTTOM OF PART.
10. TWO SIDES OF TAPER, AS SHOWN, MUST BE PLATED. TYPICAL, BOTH ENDS.
11. TWO SIDES OF TAPER, AS SHOWN, AND TIP MAY BE UNPLATED. TYPICAL, BOTH ENDS.
12. POST: MATTE TIN-LEAD (93/7) PLATED.
13. OBSOLETE PART NUMBER.

	LEADFREE	FINISH	IN	MM	NO OF POSITIONS	PART NUMBER
	YES	7	1.484	37.69	14	3-644861-4
			1.384	35.15	13	3-644861-3
			1.284	32.61	12	3-644861-2
			1.184	30.07	11	3-644861-1
			1.084	27.53	10	3-644861-0
			.984	24.99	9	2-644861-9
			.884	22.45	8	2-644861-8
			.784	19.91	7	2-644861-7
			.684	17.37	6	2-644861-6
			.584	14.83	5	2-644861-5
			.484	12.29	4	2-644861-4
			.384	9.75	3	2-644861-3
			.284	7.21	2	2-644861-2
13 SUPERCEDED BY 3-644861-4	NO	12	1.484	37.69	14	1-644861-4
13 SUPERCEDED BY 3-644861-3			1.384	35.15	13	1-644861-3
13 SUPERCEDED BY 3-644861-2			1.284	32.61	12	1-644861-2
13 SUPERCEDED BY 3-644861-1			1.184	30.07	11	~~1-644861-1~~
13 SUPERCEDED BY 3-644861-0			1.084	27.53	10	1-644861-0
13 SUPERCEDED BY 2-644861-9			.984	24.99	9	644861-9
13 SUPERCEDED BY 2-644861-8			.884	22.45	8	644861-8
13 SUPERCEDED BY 2-644861-7			.784	19.91	7	644861-7
13 SUPERCEDED BY 2-644861-6			.684	17.37	6	644861-6
13 SUPERCEDED BY 2-644861-5			.584	14.83	5	644861-5
13 SUPERCEDED BY 2-644861-4			.484	12.29	4	644861-4
13 SUPERCEDED BY 2-644861-3			.384	9.75	3	644861-3
13 SUPERCEDED BY 2-644861-2			.284	7.21	2	644861-2
			L		HEADER ASSEMBLY	

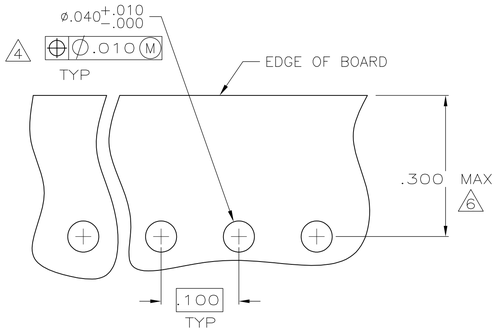

RECOMMENDED MOUNTING HOLE PATTERN FOR .063 THK PRINTED CIRCUIT BOARD 2

.035	0.89	.176	4.47	—	—
.032	0.81	.140	3.56	—	—
.030	0.76	.107	2.72	—	—
.025	0.64	.100	2.54	—	—
.010	0.25	.092	2.34	.410	10.41
.005	0.13	.063	1.6	.313	7.95
.001	0.03	.050	1.27	.300	7.62
.000	0	.040	1.02	.200	5.08
IN	MM	IN	MM	IN	MM

CONVERSION TABLE

METRIC

THIS DRAWING IS A CONTROLLED DOCUMENT.

DIMENSIONS: INCHES

TOLERANCES, UNLESS OTHERWISE SPECIFIED:
0 PLC ± -
1 PLC ± -
2 PLC ± -
3 PLC ± .005
4 PLC ± -
ANGLES ± -

MATERIAL 1
FINISH SEE TABLE

DWN 28MAY2003 S. CARPENTER
CHK 28MAY2003 D. BOSSI
APVD 28MAY2003 D. BOSSI
PRODUCT SPEC
APPLICATION SPEC
WEIGHT
CUSTOMER DRAWING

TE Connectivity

NAME
MTA-100 SHROUDED HEADER ASSEMBLY, FRICTION LOCK,STRAIGHT POST, TIN OR TIN LEAD PLATED

SIZE	CAGE CODE	DRAWING NO	RESTRICTED TO
A1	00779	C-644861	—

SCALE 10:1 SHEET 1 OF 1 REV L1

4805 (3/11)