THIS DRAWING IS UNPUBLISHED. RELEASED FOR PUBLICATION -,- .
© COPYRIGHT - By - ALL RIGHTS RESERVED.

LOC	DIST
FT	0

REVISIONS

P	LTR	DESCRIPTION	DATE	DWN	APVD
	J1	REVISED PER ECO-11-005027	11MAR11	RK	HMR

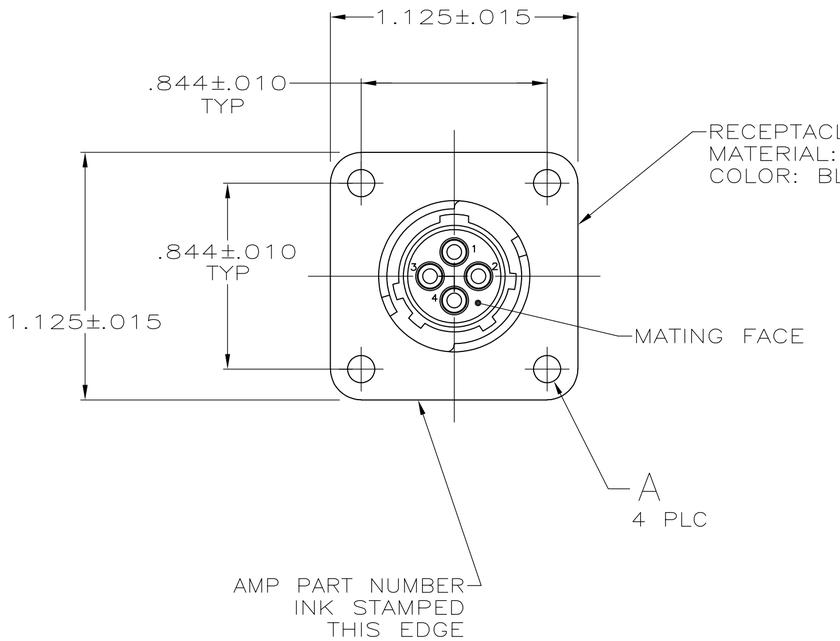

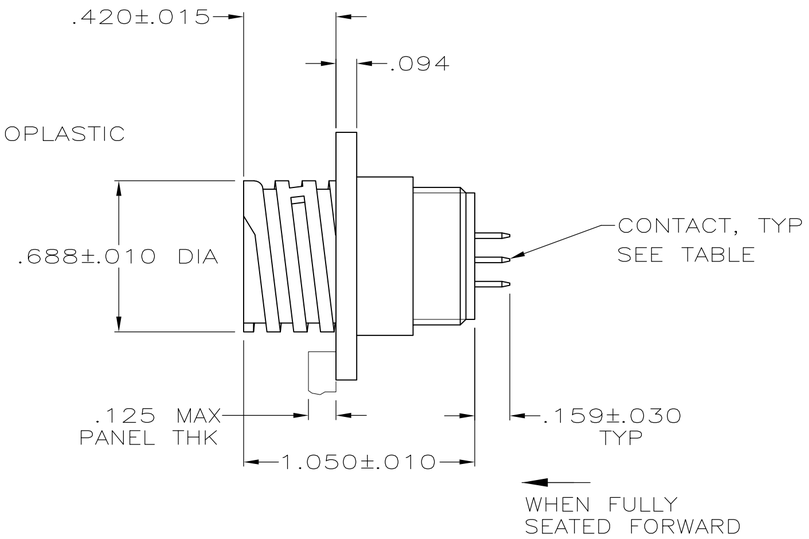

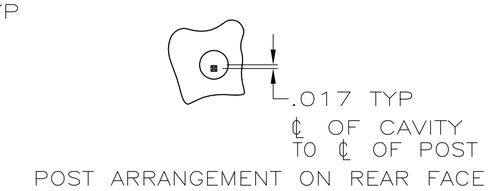

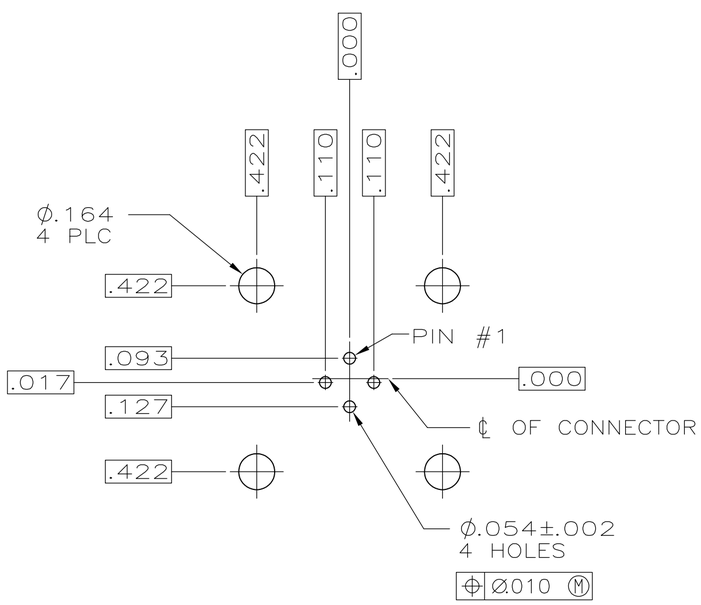

RECOMMENDED P.C. BOARD LAYOUT

1. CONTACT BODY: GOLD PLATED PER MIL-G-45204 OVER NICKEL PER QQ-N-290.
   CONTACT POST: TIN-LEAD PER MIL-T-10727 OVER COPPER PER MIL-C-14550A.
2. CONTACT BODY: TIN-LEAD PLATED .000100 MIN.
   CONTACT POST: TIN-LEAD PLATED .000100 MIN.
3. CONTACT BODY: GOLD PLATED OVER NICKEL PER QQ-N-290.
   CONTACT POST: TIN OVER COPPER.
4. PRELIMINARY PART NUMBER.

	3	NO	.125 DIA	1,2,3	208283-7
	3	NO	4-40UNC, INSERT, BRASS	1,3,4	208283-6
4	2	NO	.125 DIA	ALL	208283-5
	1	NO	.125 DIA	ALL	208283-4
	1	YES	.125 DIA	ALL	208283-3
	1	NO	4-40UNC, INSERT, BRASS	1,3,4	208283-2
	1	NO	.125 DIA	ALL	208283-1
FINISH		PERIPHERAL SEAL	A	CONTACTS LOADED AT POSITION	PART NUMBER

THIS DRAWING IS A CONTROLLED DOCUMENT.

DIMENSIONS: INCHES

TOLERANCES UNLESS OTHERWISE SPECIFIED:
0 PLC ± -
1 PLC ± -
2 PLC ± -
3 PLC ± .005
4 PLC ± -
ANGLES ± -

MATERIAL -
FINISH -

DWN R.LEE BG 6-22-91
CHK W.G.LENKER 4-14-92
APVD -
PRODUCT SPEC 108-10024
APPLICATION SPEC -
WEIGHT -

TE Connectivity

NAME RECEPTACLE ASSEMBLY, POSTED, REV SEX, SERIES 1, 11-4, CPC -

SIZE	CAGE CODE	DRAWING NO	RESTRICTED TO
A2	00779	C-208283	-

CUSTOMER DRAWING | SCALE 1:1 | SHEET 1 OF 1 | REV J1

208283

1471-9 (3/11)