Surge protection device - TTC-6P-2-HC-24DC-UT-I - 2906811

Please be informed that the data shown in this PDF Document is generated from our Online Catalog. Please find the complete data in the user's documentation. Our General Terms of Use for Downloads are valid (http://phoenixcontact.com/download)

Surge protection, consisting of protective plug and base element, with integrated status indicator for a 2-wire floating signal circuit with high nominal current.

Your advantages

- Space-saving installation due to the narrow overall width of 6.2 mm
- Signaling without additional auxiliary power, thanks to the mechanical status indicator
- Optional remote signaling module monitors up to 40 items, without additional wiring
- The signal is not influenced during maintenance work, thanks to the impedance-neutral insertion and removal of protective plugs
- Error-free replacement of protective plugs, thanks to coding
- Safe behavior in the event of overload, thanks to the integrated disconnect device
- Simple testing and documentation with CHECKMASTER 2, thanks to pluggable protective modules

Key Commercial Data

Packing unit	1 pc
GTIN	4 055626 135755
GTIN	4055626135755
Weight per Piece (excluding packing)	44.400 g
Custom tariff number	85363010
Country of origin	Germany

Technical data

Dimensions

Height	105.8 mm
Width	6.2 mm +0.1 mm
Depth	100 mm (incl. DIN rail 7.5 mm)

Ambient conditions

Ambient temperature (operation)	-40 °C ... 85 °C

Surge protection device - TTC-6P-2-HC-24DC-UT-I - 2906811

Technical data

Ambient conditions

Ambient temperature (storage/transport)	-40 °C ... 85 °C
Permissible humidity (operation)	5 % ... 95 %
Altitude	≤ 4000 m (amsl (above mean sea level))
Degree of protection	IP20

General

Housing material	PBT
Flammability rating according to UL 94	V-0
Color	traffic grey A RAL 7042
	light grey RAL 7035
Mounting type	DIN rail: TH 35 - 7.5 mm
Type	DIN rail module, two-section, divisible
Direction of action	Line-Line & Line-Signal Ground/Shield & optional Signal Ground/Shield-Earth Ground

Protective circuit

IEC test classification	C1
	C2
	C3
	D1
Nominal voltage U_N	24 V DC
Maximum continuous voltage U_C	30 V DC
	21 V AC
Rated current	6 A (55 °C)
Operating effective current I_C at U_C	≤ 5 µA
Residual current I_{PE}	≤ 1 µA
Nominal discharge current I_n (8/20) µs (line-line)	0.5 kA
Nominal discharge current I_n (8/20) µs (line-earth)	5 kA
Pulse discharge current I_{imp} (10/350) µs (line-earth)	0.5 kA
Total discharge current I_{total} (8/20) µs	5 kA
Voltage protection level U_p (line-line)	≤ 50 V (C1 - 1 kV/500 A)
	≤ 45 V (C3 - 25 A)
	≤ 50 V (C3 - 100 A)
Voltage protection level U_p (line-earth)	≤ 1.35 kV (C1 - 1 kV/500 A)
	≤ 1.45 kV (C2 - 10 kV / 5 kA)
	≤ 850 V (C3 - 25 A)
	≤ 1.1 kV (C3 - 100 A)
Response time t_A (line-line)	≤ 1 ns
Response time t_A (line-earth)	≤ 100 ns
Input attenuation aE, sym.	typ. 0.3 dB (≤ 300 kHz / 150 Ω)
Cut-off frequency fg (3 dB), sym. in 150 Ohm system	typ. 1 MHz

Surge protection device - TTC-6P-2-HC-24DC-UT-I - 2906811

Technical data

Protective circuit

Capacity (line-earth)	typ. 2.2 nF
Resistance per path	≤ 100 mΩ
Max. required back-up fuse	6.3 A (FF)
Impulse durability (line-line)	C1 - 1 kV / 500 A
	C3 - 100 A
Impulse durability (line-earth)	C1 - 1 kV / 500 A
	C2 - 10 kV / 5 kA
	C3 - 100 A
	D1 - 500 A
Pulse reset time (line-earth)	≤ 40 ms

Connection data

Connection method	Screw connection
Screw thread	M3
Tightening torque	0.5 Nm ... 0.6 Nm
Stripping length	8 mm
Conductor cross section flexible	0.2 mm² ... 2.5 mm²
Conductor cross section solid	0.2 mm² ... 4 mm²
Conductor cross section AWG	24 ... 12

Standards and Regulations

Standards/specifications	IEC 61643-21 2000 + corrigendum 2001 + A1:2008, modified + A2:2012
	EN 61643-21 2001 + A1:2009 + A2:2013

Environmental Product Compliance

REACh SVHC	Lead 7439-92-1
China RoHS	Environmentally Friendly Use Period = 50 years
	For details about hazardous substances go to tab “Downloads”, Category “Manufacturer's declaration”

Drawings

Surge protection device - TTC-6P-2-HC-24DC-UT-I - 2906811

Diagram

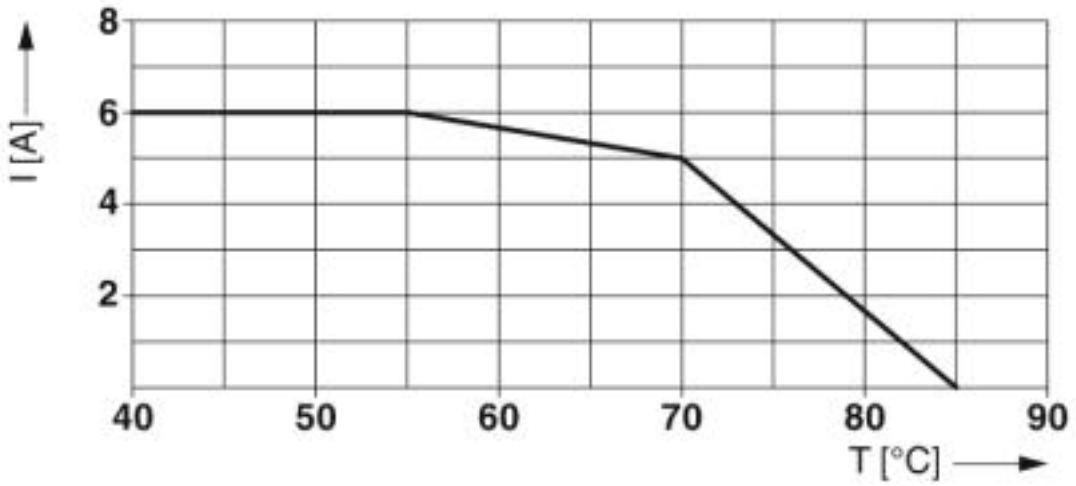

Dimensional drawing

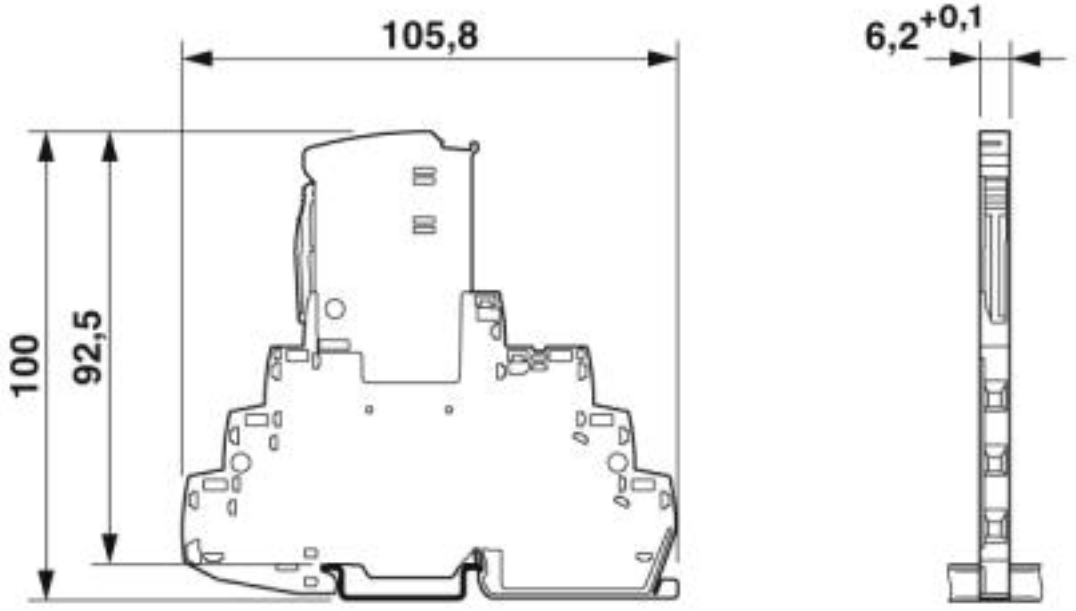

Surge protection device - TTC-6P-2-HC-24DC-UT-I - 2906811

Pictogram

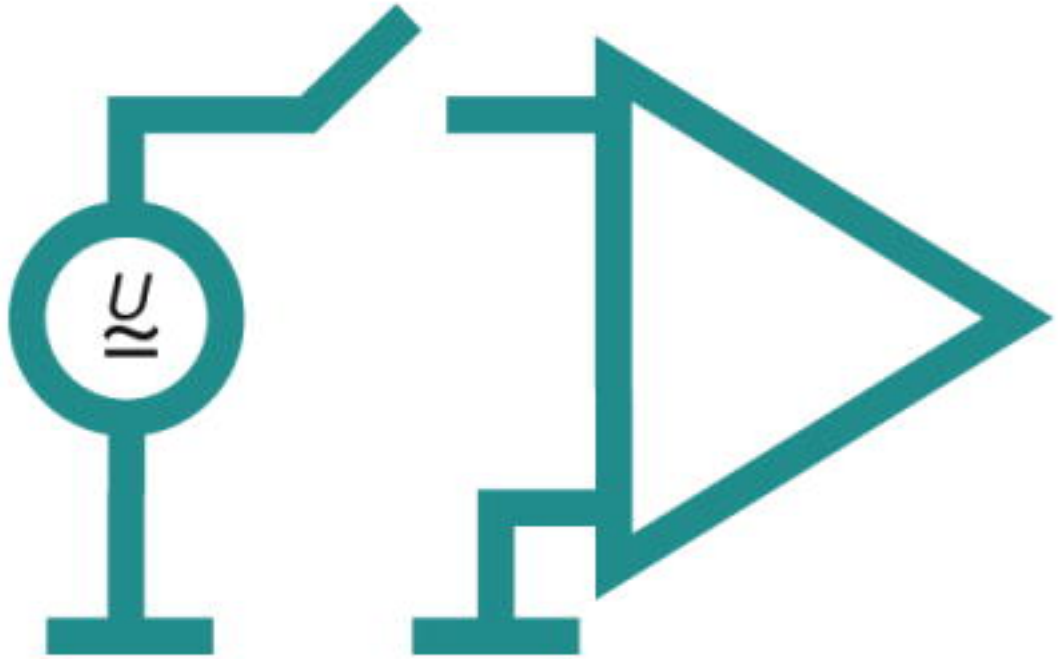

Circuit diagram

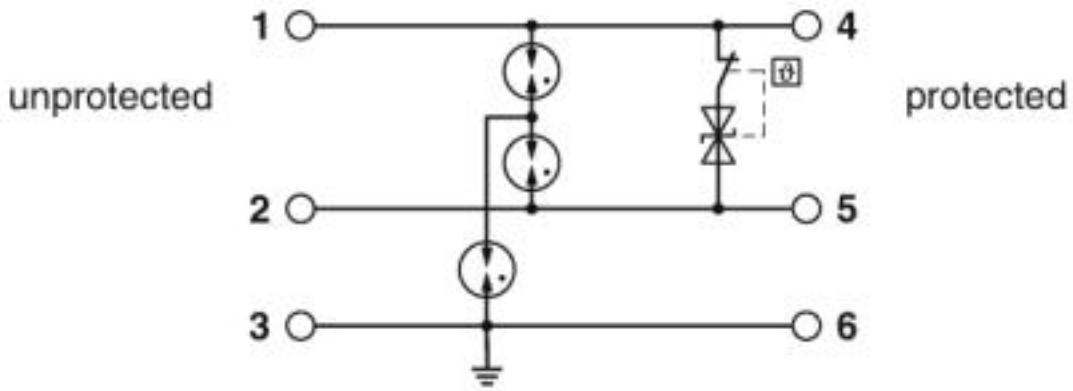

Classifications

eCl@ss

eCl@ss 4.0	27140201
eCl@ss 4.1	27130801
eCl@ss 5.0	27130801
eCl@ss 5.1	27130801
eCl@ss 6.0	27130800
eCl@ss 7.0	27130807
eCl@ss 8.0	27130807
eCl@ss 9.0	27130807

Surge protection device - TTC-6P-2-HC-24DC-UT-I - 2906811

Classifications

ETIM

ETIM 3.0	EC000943
ETIM 4.0	EC000943
ETIM 5.0	EC000943
ETIM 6.0	EC000943
ETIM 7.0	EC000943

UNSPSC

UNSPSC 6.01	30212010
UNSPSC 7.0901	39121610
UNSPSC 11	39121610
UNSPSC 12.01	39121610
UNSPSC 13.2	39121620
UNSPSC 18.0	39121620
UNSPSC 19.0	39121620
UNSPSC 20.0	39121620
UNSPSC 21.0	39121620

Approvals

Approvals

Approvals

DNV GL / CSA / UL Listed / CSAus / cCSAus

Ex Approvals

Approval details

DNV GL	https://approvalfinder.dnvgl.com/	TAE000027G
CSA	http://www.csagroup.org/services-industries/product-listing/	70136717
UL Listed	http://database.ul.com/cgi-bin/XYV/template/LISEXT/1FRAME/index.htm	FILE E 138168

Surge protection device - TTC-6P-2-HC-24DC-UT-I - 2906811

Approvals

CSAus		http://www.csagroup.org/services-industries/product-listing/	70136717

cCSAus	

Accessories

Accessories

End block

End clamp - CLIPFIX 35-5 - 3022276

Quick mounting end clamp for NS 35/7,5 DIN rail or NS 35/15 DIN rail, with marking option, with parking option for FBS...5, FBS...6, KSS 5, KSS 6, width: 5.15 mm, color: gray

Labeled terminal marker

Zack Marker strip, flat - ZBF 6 CUS - 0825027

Zack Marker strip, flat, Strip, can be ordered: Strip, white, labeled according to customer specifications, mounting type: snap into flat marker groove, for terminal block width: 6.2 mm, lettering field size: 5.15 x 6.15 mm, Number of individual labels: 10

Zack Marker strip, flat - ZBF 6,QR:FORTL.ZAHLEN - 0808765

Zack Marker strip, flat, Strip, white, labeled, Printed vertically: consecutive numbers 1 ... 10, 11 ... 20, etc. up to 91 ... 100, mounting type: snap into flat marker groove, for terminal block width: 6.2 mm, lettering field size: 5.15 x 6.15 mm, Number of individual labels: 10

Marker pen

Surge protection device - TTC-6P-2-HC-24DC-UT-I - 2906811

Accessories

Marker pen - X-PEN 0,35 - 0811228

Marker pen without ink cartridge, for manual labeling of markers, labeling extremely wipe-proof, line thickness 0.35 mm

Terminal marking

Zack Marker strip, flat - ZBF 6:UNBEDRUCKT - 0808710

Zack Marker strip, flat, Strip, white, unlabeled, can be labeled with: PLOTMARK, CMS-P1-PLOTTER, mounting type: snap into flat marker groove, for terminal block width: 6.2 mm, lettering field size: 5.15 x 6.15 mm, Number of individual labels: 10

Zack Marker strip, flat - ZBF 6/WH-100:UNBEDRUCKT - 0808736

Zack Marker strip, flat, Strip, white, unlabeled, can be labeled with: PLOTMARK, CMS-P1-PLOTTER, mounting type: snap into flat marker groove, for terminal block width: 6.2 mm, lettering field size: 5.15 x 6.15 mm, Number of individual labels: 10

Additional products

Remote signaling set - TTC-6-FMRS-UT - 2907810

Module set for the optical monitoring and floating remote signaling of neighboring surge protective devices of the TERMITRAB complete product range.

Fuse holder - TTC-6-FC-UT - 1054762

Fuse carrier for surge protective devices of the TERMITRAB complete product range with screw connection technology. Multi-level connection on TTC-6 housings possible. For conventional 5x20 mm miniature fuses.

Surge protection device - TTC-6P-2-HC-24DC-UT-I - 2906811

Accessories

Shield connection - SSA 3-6 - 2839295

Shield fast connection for 3 ... 6 mm cable diameter. Potential connecting cable: 200 mm, 1 mm², color: black

Shield connection - SSA 5-10 - 2839512

Shield fast connection for 5 ... 10 mm cable diameter. Potential connecting cable: 200 mm, 1 mm², color: black

Spare parts

Surge protection plug - TTC-6P-2-HC-24DC-I-P - 2907845

Surge protection plug with integrated status indicator on the module for a 2-wire floating signal circuit with a high nominal current. Nominal voltage: 12 V DC

Phoenix Contact 2020 © - all rights reserved
http://www.phoenixcontact.com